No. 709,456. Patented Sept. 23, 1902.

E. B. ALLEN.

THREAD CONTROLLING DEVICE FOR SEWING MACHINES.

(Application filed Dec. 4, 1901.)

(No Model.)

Fig. 1.

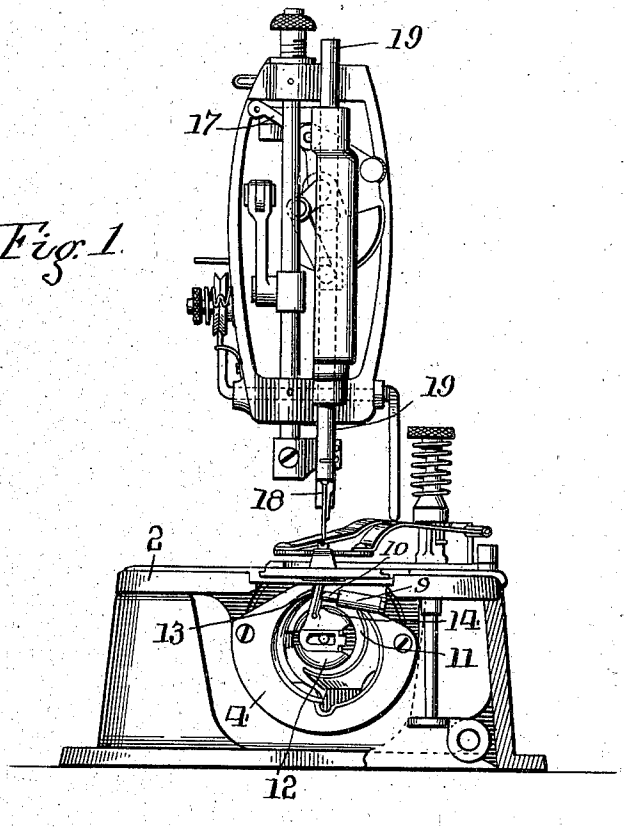

Fig. 4.

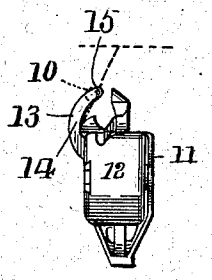

Fig. 3.

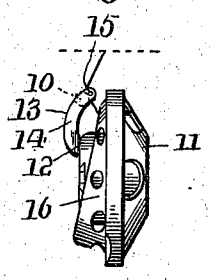

Fig. 2.

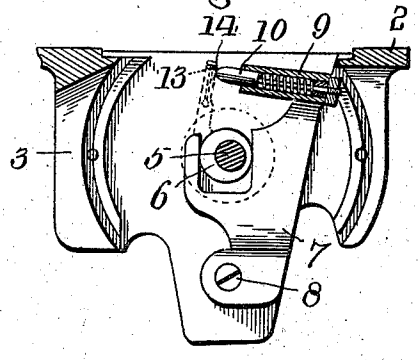

Witnesses:
Wm. F. Doyle.
L. M. Sweeney.

Inventor.
Edward B. Allen,
By Henry Calvert,
Attorney.

THE NORRIS PETERS CO., PHOTO-LITHO., WASHINGTON, D. C.

UNITED STATES PATENT OFFICE.

EDWARD B. ALLEN, OF ELIZABETH, NEW JERSEY, ASSIGNOR TO THE SINGER MANUFACTURING COMPANY, A CORPORATION OF NEW JERSEY.

THREAD-CONTROLLING DEVICE FOR SEWING-MACHINES.

SPECIFICATION forming part of Letters Patent No. 709,456, dated September 23, 1902.

Original application filed September 20, 1901, Serial No. 75,667. Divided and this application filed December 4, 1901. Serial No. 84,658. (No model.)

To all whom it may concern:

Be it known that I, EDWARD B. ALLEN, a citizen of the United States, residing at Elizabeth, in the county of Union and State of New Jersey, have invented certain new and useful Improvements in Thread-Controlling Devices for Sewing-Machines, of which the following is a specification, reference being had therein to the accompanying drawings.

In some classes of two-thread sewing-machines it is desirable to control the lower or locking thread in such a manner that when a stitch has been tightened by the take-up device such tightened stitch will not be subsequently disturbed when slack thread is drawn from the lower thread-supply for the next succeeding stitch. This non-disturbance of the tightened stitches is particularly desirable in making buttonhole or overedge seams, for the reason that when the purl incidental to such seams has been drawn to its proper position when a stitch has been "set" or tightened the said purl is liable to be displaced when slack thread for the next stitch is drawn from the lower thread-supply through the lower tension device. To prevent the disturbance of the tightened stitches or the displacement of the purl of buttonhole or overedge stitches when fresh thread is drawn from the lower thread-supply, the present invention provides an automatic thread-nipping device or thread-check which holds the lower or shuttle thread immovable between the bobbin or thread-supply and the work after a stitch has been tightened by the take-up and while slack thread is being drawn from the lower thread-supply for the next succeeding stitch.

In the accompanying drawings, Figure 1 is a front end view of a Singer oscillating-shuttle overseaming-machine with the present invention applied thereto. Fig. 2 is a detail view of a portion of the same to show the operating mechanism for the thread-nipper. Figs. 3 and 4 are detail views of the shuttle and bobbin employed in the machine referred to.

Referring to the drawings, 2 denotes a portion of the work-plate of the machine and which is provided with a hanger 3, to which the shuttle-race 4 (omitted for clearness of illustration in Fig. 2) is attached. The shuttle of the machine referred to is operated from an oscillating or rocking shaft 5, provided with an eccentric 6, working in a yoke formed on a lever 7, pivoted at 8 to the hanger 3 and provided at its upper end with a sleeve 9, in which is mounted a spring-pressed thread-nipping plunger 10. The shuttle 11, oscillating in the race 4, is furnished with a bobbin-case 12, carrying the lower or locking thread, said bobbin-case having an upwardly-projecting finger 13, which engages some stationary part of the machine, as a portion of the shuttle-race, to restrain the bobbin-case from moving while the shuttle oscillates about it, the bobbin-case and shuttle being mounted concentrically with the shaft 5, as is the usual construction in the well-known Singer "center-bobbin" lock-stitch machine. In the present instance the bobbin-case finger 13 is split to form a spring-finger 14, between which and the finger 13 the bobbin-thread normally passes freely from the bobbin or lower thread spool upward to the work, the thread being held from displacement between the fingers 13 and 14 by a cross-pin 15.

The shuttle is provided, as is usual, with an inclined flange 16, which at the backward oscillating movement of the shuttle comes in contact with the bobbin-thread and draws from the bobbin, through the lower tension device, a supply of slack thread sufficient for the next succeeding stitch, thus acting as a pull-off for the lower thread, and the parts are so arranged for coöperation that during the time when the slack thread referred to is being drawn from the bobbin the spring-pressed thread-nipping plunger 10 will be in contact with the spring-finger 14, so as to force it toward the rigid finger 13, and thus nip the thread between these two parts. It will thus be understood that when the take-up 17, in coöperation with the needle 18, carried by the needle-bar 19, has tightened a stitch and the purl or lock in the seam has been drawn to its proper position such purl or lock will not be disturbed or displaced by

any subsequent pull on the lower thread in the operation of drawing slack thread through the lower tension for the next succeeding stitch.

Although the present invention is more particularly intended for use in connection with buttonhole or overseaming mechanisms, (as set forth in my application, Serial No. 75,667, filed September 20, 1901, and of which application this case is a division,) it will be understood that it may be used in connection with any two-thread stitch-forming mechanism where it may be desirable to prevent displacement of the stitches after they have once been set or tightened by any subsequent draft or strain on the lower thread.

Having thus described my invention, I claim and desire to secure by Letters Patent—

1. In a sewing-machine, the combination with upper and lower stitch-forming devices, comprising a needle and a shuttle for forming lock-stitches, and a bobbin-case for said shuttle, of means for drawing up the upper or needle thread in tightening the stitches, a pull-off device for the lower thread, an automatic lower-thread-nipping device comprising a rigid finger and a spring-finger on the said bobbin-case and between which the shuttle-thread passes, and a moving part timed to engage said spring-finger so as to cause said thread-nipping device to hold said shuttle-thread after a stitch has been "set" or tightened and while the said pull-off device is drawing lower thread through the lower tension device for the next stitch.

2. In a sewing-machine, the combination with upper and lower stitch-forming devices, the latter of which comprises a shuttle having a pull-off flange for the lower thread and a bobbin-case having an arm or projection which prevents the said bobbin-case from moving with the shuttle, and which arm or projection is constructed to form a thread-nipping device, a take-up device for tightening the stitches, and means for closing said thread-nipping device after a stitch has been tightened and while thread is being drawn from the bobbin for the next succeeding stitch; whereby after a stitch has been tightened it will remain undisturbed by any subsequent pull on the lower thread.

3. In a sewing-machine, the combination with the upper and lower stitch-forming devices the latter of which comprises a shuttle having a pull-off flange for the lower thread and a bobbin-case having an arm or projection which prevents the said bobbin-case from moving with the shuttle, and which arm or projection is constructed to form a thread-nipping device, a take-up device for tightening the stitches, a spring-pressed plunger for closing the said thread-nipping device, a vibrating arm or lever by which the said spring-pressed plunger is carried, and means for operating the said arm or lever.

In testimony whereof I affix my signature in presence of two witnesses.

EDWARD B. ALLEN.

Witnesses:
HENRY J. MILLER,
HENRY A. KORNEMANN.