F. P. JUDD.

FILM WINDING MECHANISM.

APPLICATION FILED JAN. 12, 1921.

1,411,106. Patented Mar. 28, 1922.

3 SHEETS—SHEET 1.

FIG. 9.

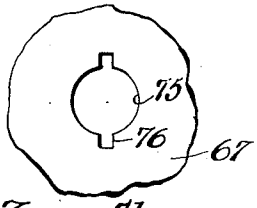

FIG. 1.

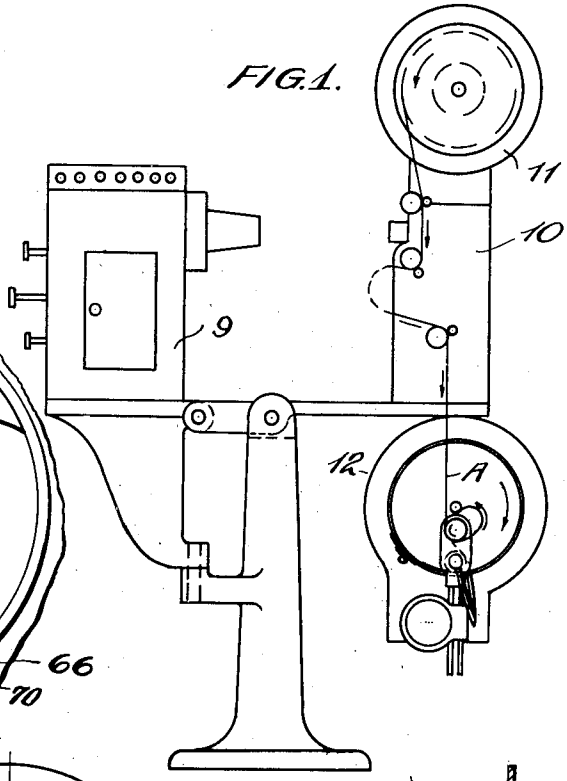

FIG. 7.

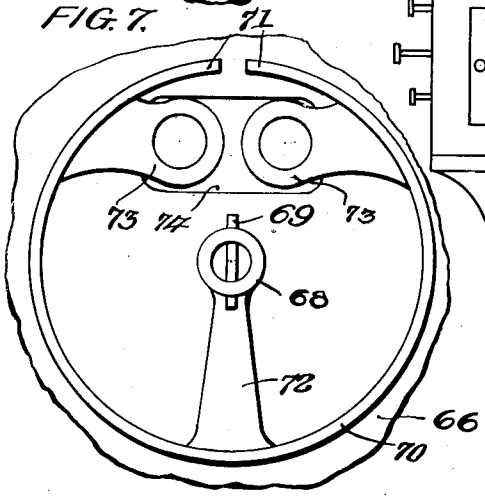

FIG. 6.

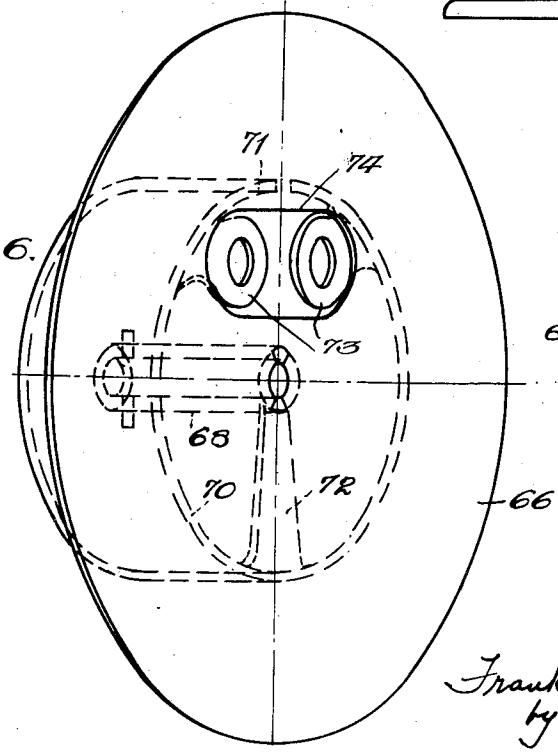

FIG. 8.

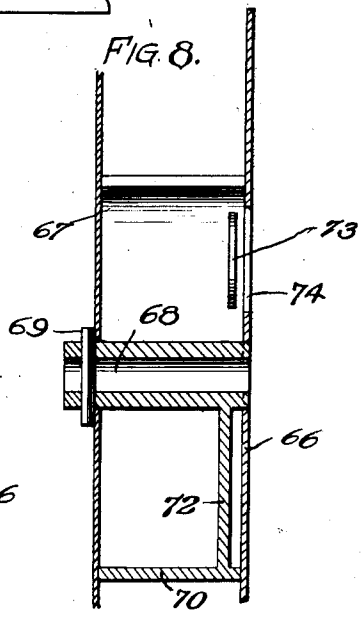

Inventor
Frank P. Judd,
by [illegible]
Attorney

F. P. JUDD.

FILM WINDING MECHANISM.

APPLICATION FILED JAN. 12, 1921.

1,411,106. Patented Mar. 28, 1922.

3 SHEETS—SHEET 2.

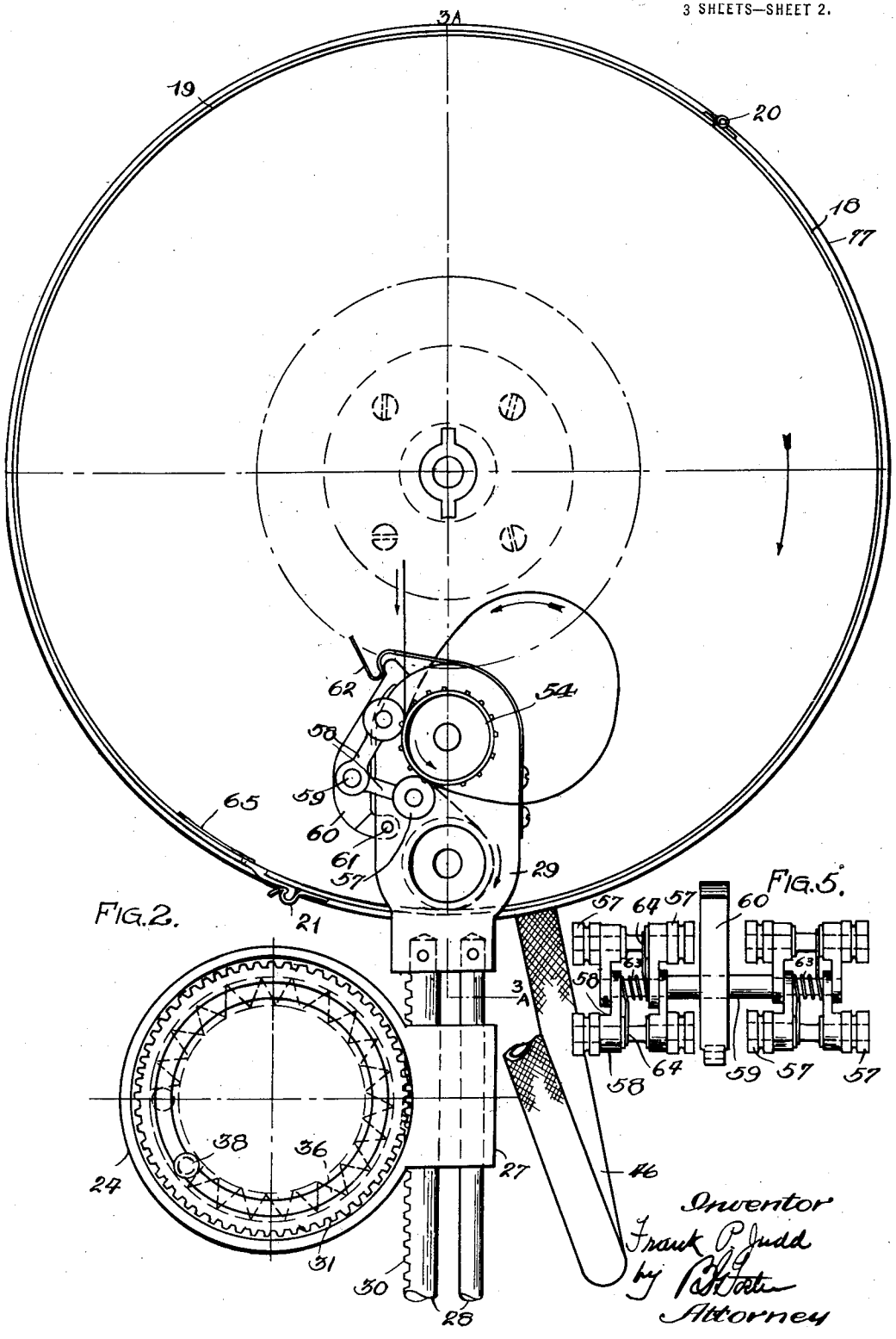

FIG. 2.

FIG. 5.

Inventor
Frank P. Judd
by P. B. Potter
Attorney

F. P. JUDD.

FILM WINDING MECHANISM.

APPLICATION FILED JAN. 12, 1921.

1,411,106. Patented Mar. 28, 1922.

3 SHEETS—SHEET 3.

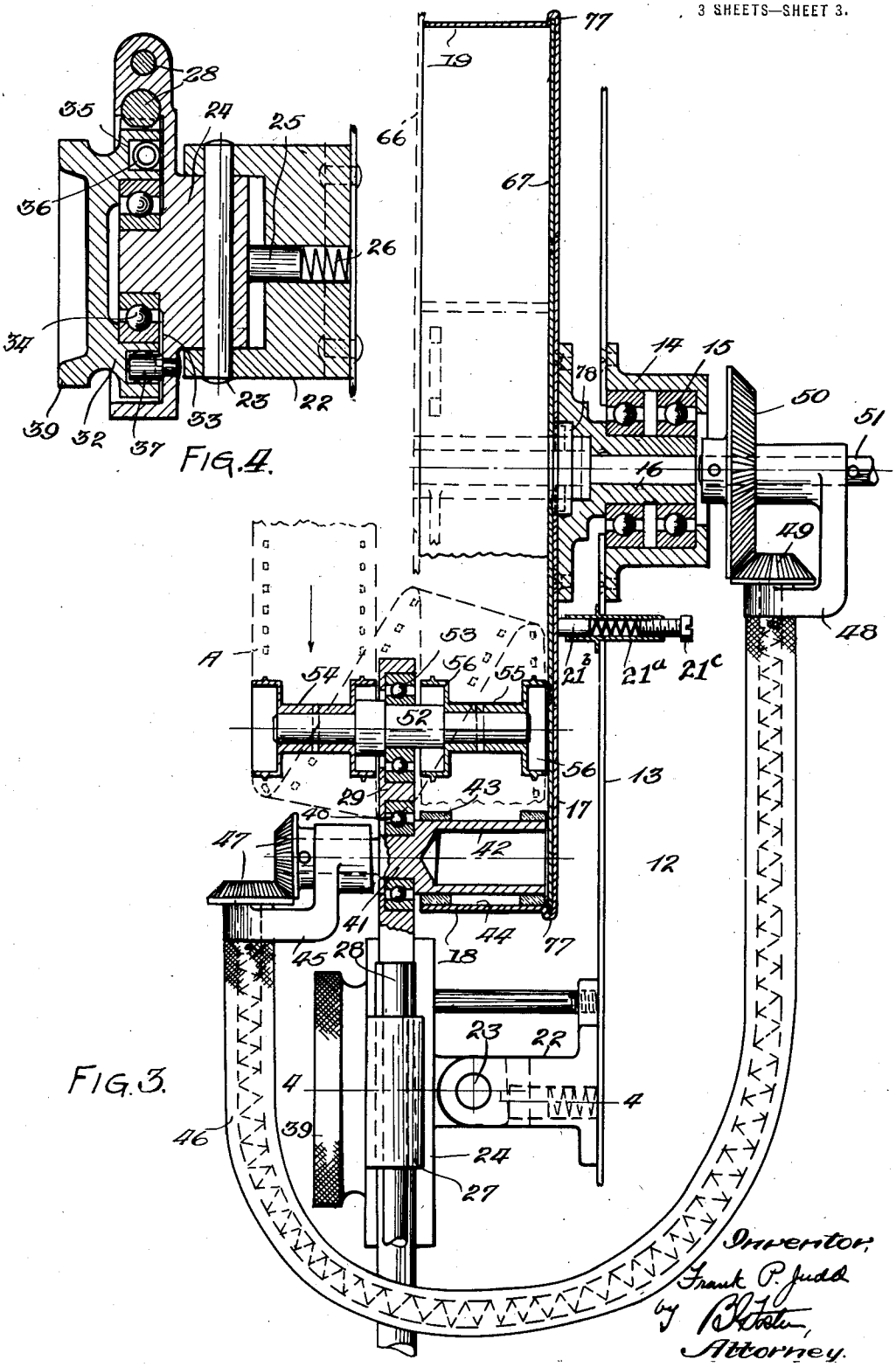

FIG. 4.

FIG. 3.

Inventor,
Frank P. Judd
by B. Foster,
Attorney.

UNITED STATES PATENT OFFICE.

FRANK P. JUDD, OF TONAWANDA, NEW YORK.

FILM-WINDING MECHANISM.

1,411,106. Specification of Letters Patent. Patented Mar. 28, 1922.

Application filed January 12, 1921. Serial No. 436,708.

To all whom it may concern:

Be it known that I, FRANK P. JUDD, a citizen of the United States, residing at Tonawanda, in the county of Erie and State of New York, have invented certain new and useful Improvements in Film-Winding Mechanism, of which the following is a specification.

The present invention relates to apparatus for winding film, so that the initial end thereof will be available without the necessity of rewinding. It is particularly intended for receiving the film as it comes from the projecting appartus.

The object in view is the provision of relatively simple and practical means for obtaining the above end substantially without friction and undue strain upon the film, thereby avoiding danger of scratching, breaking, or otherwise injuring the same.

In the accompanying drawings:—

Figure 1 is a side elevation of a projecting apparatus in outline, showing the novel receiving and winding means,

Figure 2 is a front elevation on an enlarged scale of the winding mechanism,

Figure 3 is a sectiontal view on the line 3—3 of Figure 2,

Figure 4 is a detail sectional view of the support for the placing and directing means taken on the line 4—4 of Figure 3,

Figure 5 is a detail view in elevation of the retaining means that cooperate with the idler rolls.

Figure 6 is a perspective view of one of the reel members,

Figure 7 is a view in elevation of the same,

Figure 8 is a vertical sectional view through the reel in assembled condition.

Figure 9 is a detail view in elevation of the central portion of the detachable reel head.

Referring to Figure 1, a projecting apparatus is disclosed, including a lantern 9 with film-carrying and operating mechanism 10 in advance thereof, said mechanism including an upper delivery reel 11 and a lower receiving or winding mechanism designated generally by the reference numeral 12. This winding mechanism contitutes the subject-matter of the present invention.

In the specific embodiment disclosed, a supporting plate 13 is employed carrying a box 14 in which is journaled, preferably in ball bearings 15, the trunnion 16 of a receiving drum. This drum comprises a rear end wall 17 and a cylindrical wall composed of sections 18 and 19 hingedly connected, as illustrated at 20. The section 19 is preferably slightly over half of the cylindrical wall, and by reason of the hinge connection it can be swung outwardly, the section 18 being permanently fastened to the end wall 17. The free end of the section 19 preferably overlaps the adjacent end of the section 18 and is normally held thereon by a spring latch 21. The free rotation of the drum is retarded by a drag or brake comprising a tubular guide 21^a in which is slidably mounted a shoe 21^b that frictionally bears against the drum. This shoe is borne against by a spring, the tension of which can be varied by an abutment screw 21^c adjustably threaded into the guide 21^a.

The supporting plate 13 is provided below the drum with an ear 22 on which is pivotally mounted, as shown at 23, a supporting head 24. This head is normally held in upright position by a plunger 25 slidably mounted in the ear 22 and urged against the rear side of the head below the pivot by a spring 26, as shown more particularly in Figure 4. The head 24 is provided on one side with an enlargement or lug 27 forming a guideway in which are slidably mounted vertical stems 28 of a standard 29. The upper end of this standard is located adjacent to the lower portion of the open end of the receiving drum. One of the stems 28 is provided with a rack 30, and a gear 31 in mesh with said rack forms a part of a spring drum 32 that is journaled in a recess 33 formed in the front side of the head 24. A ball bearing 34 is provided for this drum. The drum, as shown more particularly in Figures 2 and 4, has an annular recess 35 in its rear side that receives a coiled spring 36. One end of this spring bears against an abutment 37 projecting into the recess 35 from the head 24. The other end of the spring has a bearing against a corresponding abutment 38 carried by the drum. The said drum projects beyond the head and has a knurled hand wheel 39. The arrangement is such that the spring 36 acts in a direction to force the standard downwardly as will be evident.

The head of the standard 29 is provided with a ball bearing 40 in which is journaled the gudgeon 41 of a roller 42 that extends into the drum and has spaced tread portions 43 of a yielding character that operate on the internal face 44 of the peripheral wall

18—19 of said drum. The gudgeon 41 projects from the outer end of the standard and passes through a bracket 45, in the outer end of which is journaled one end of a flexible drive shaft 46. This shaft is geared to the gudgeon 41 by beveled gears 47. The other end of the shaft is journaled in another bracket 48 and carries a beveled gear 49 in mesh with another gear 50 mounted on a drive shaft 51. It will thus be seen that when the shaft 51 is rotated motion will be transmitted by the flexible shaft 46 and the gearing to the roller 42. The said roller 42 may be designated as a placing roller that frictionally cooperates with the internal receiving surface 44 of the drum, and it will be evident that this roller is movable toward and from the surface 44, its movement toward the said surface being effected by the spring drum, and its movement in an opposite direction being obtained by turning the hand wheel 39 in opposition to the spring 35 that actuates said drum.

The film to be wound is designated generally by the reference character A and is directed to a point between the treads 43 of the roller 42 and the receiving surface 44. To this end a shaft 52 is journaled between its end in a ball bearing 53 in the upper end of the standard 29 and projects on opposite sides of said standard. Fixed to the projecting ends are idlers 54 and 55, each idler having spaced toothed rims 56, the teeth being adapted to enter the usual marginal perforations of the film. It will be noted that the two idlers are thus arranged in axial alignment and parallel to the placing roller 42. For the purpose of retaining the film upon these wheels grooved rollers 57 are employed that ride on the peripheries of the rims 56. These rollers, as shown more particularly in Figure 5, are carried on swinging arms 58 journaled on a pin 59 that extends through a swinging arm 60. The arm 60 is pivoted upon one side of the standard head, as shown at 61, and said arm 60 is adapted to be held against movement by a latch 62 that engages over its upper free end. The rollers 57 are yieldingly held against the rims 50 of the idlers 54 by springs 63 coiled about the pin 59 between the arms 58, and having their terminals 64 operating against the roller spindles.

The operation of the apparatus as thus far described is as follows. The film as it comes from the projecting apparatus is threaded about the idlers 54, as indicated in Figures 2 and 3, being retained thereupon by the rollers 57, and is passed between the treads 43 of the roller 42 and the internal receiving face 44 of the peripheral wall of the drum. Its end is preferably engaged beneath a clip plate 65 mounted on the inner side of the free end of the section 19. If now the shaft 51 is in operation the roller 42 will be driven and by reason of the frictional cooperation between said roller and the peripheral wall of the drum the latter will be rotated in the direction of the arrow shown in Figure 2, thereby winding the film against the inner face 44 of the drum. As the layers increase the roller will rise to accommodate the same due to the yielding action of the spring drum. It will be understood that it is the cooperation of the roller 42 and the peripheral wall of the drum that constitutes the sole means for drawing the film into said drum, and as it is drawn the coupled idlers rotate freely and thus serve to direct the film to the drum without any sliding friction and undue strain.

In connection with this winding mechanism, a reel is employed that is preferably constructed as follows: Two circular heads 66 and 67 are employed. The head 66 has permanently mounted thereon an axial post 68, at the free end of which is located a projecting cross pin 69. It also carries an expansible hub 70, preferably a cylindrical spring, having adjacent free ends 71, and having its central portion provided with an ear 72 secured to the head 66 and post 68. The free end portions of the spring are furthermore provided on their rear sides with finger pieces 73 that are in line with an opening 74 formed in the head 66. The other head 67 is provided with a central opening 75 adapted to receive the free end of the post 68, and having notches 76 to allow the passage of the projecting ends of the pins 69.

The head 67, as shown in Figures 2 and 3, is adapted to be placed within the drum against the rear wall 17, and may be detachably retained therein by any suitable means. Thus in the present embodiment, its periphery is received within a groove 77 formed at the juncture of the rear wall 17 and the peripheral wall 18—19 of the drum. Moreover it will be noted by reference to Figure 3 that the gudgeon 16 is provided with a recess 78 behind the opening 75—76 of said head 67.

Prior to the introduction of the film into the drum, the head 67 is placed therein, so that the film is wound against the face 44 of the drum in front of said head. After the film is completely wound into the drum, the other portion of the reel is attached by passing the hub 70 into the space within the film, the free end of the post 68 entering the opening 75 and the pins 69 passing through the notches 76 of the head 67. The said recess 78 of the gudgeon 68 allows for this, as indicated in dotted lines in Figure 3. The head 66 and post 68 are then given a slight turn so that the head 67 thus becomes locked upon the post. The section 19 of the drum wall is then unlatched and swung open,

whereupon the assembled reel with the film thereon can be removed—the winding mechanism having been first disengaged by swinging the support and standard outwardly.

From the foregoing, it is thought that the construction, operation and many advantages of the herein described invention will be apparent to those skilled in the art, without further description, and it will be understood that various changes in the size, shape, proportion and minor details of construction, may be resorted to without departing from the spirit or sacrificing any of the advantages of the invention.

Having thus fully described my invention, what I claim as new, and desire to secure by Letters Patent, is:—

1. In winding apparatus of the character set forth, the combination with a rotatable receiving drum having an internal bearing surface, of a placing roller coacting with the surface, and a pair of rotatable idlers having teeth to engage in the marginal openings of the film, one of said idlers delivering film to the placing roller and being operated by said film, and said idler constituting means for rotating the other idler.

2. In winding apparatus of the character set forth, the combination with a rotatable receiving drum having an internal bearing surface, of a placing roller coacting with the surface, a pair of rotatable idlers having teeth to engage in the marginal openings of the film, and a connection between said idlers to hold them against relative movement, one of said idlers delivering film to the placing roller and being operated by said film and said idler constituting means for rotating the other idler.

3. In winding apparatus of the character set forth, the combination with a rotatable receiving drum having an internal bearing surface and an open end, of a placing roller coacting with the bearing surface, and a pair of relatively fixed idler rollers having peripheral teeth for engagement in the marginal openings in the film, one of said idler rollers being located within the drum in subparallel relation to the placing roller and delivering to the placing roller and being operated by the film thus delivered and the other idler roller being outside of the drum, being operated by the first idler roller and delivering film to said first roller.

4. In winding apparatus of the character set forth, the combination with a rotatable receiving drum having an internal bearing surface and an open end, of a support at said open end, a placing roller cooperating with the bearing surface to wind a film thereon, and coacting rotary idlers journaled on the support and located on opposite sides thereof, said idlers directing the film to the placing roller.

5. In winding apparatus of the character set forth, the combination with a rotatable receiving drum having an internal bearing surface and an open end, of a support at said open end, a placing roller frictionally cooperating with the bearing surface to wind a film thereon and journaled on the support, and coacting rotary idlers journaled on the support in substantial alinement and located on opposite sides thereof said idlers directing the film to the placing roller.

6. In winding apparatus of the character set forth, the combination with a rotatable receiving drum having an annular internal receiving face and an open end portion, of a standard at said open end portion, a placing roller journaled on the standard and frictionally cooperating with the placing face to wind a film thereon, a shaft on the standard projecting from both sides of the same and into the drum, and directing idlers mounted on the shaft on opposite sides of the standard.

7. In winding apparatus of the character set forth, the combination with a rotatable receiving drum having an annular internal receiving face, of a rotatable placing roller frictionally cooperating with the said face to wind a film thereagainst, a movable support for the placing roller, and toothed idlers driven by the films for directing said film to the roller, said idlers being mounted on and movable with the said support.

8. In winding apparatus of the character set forth, the combination with a rotatable receiving drum having an annular internal receiving face, of a rotatable placing roller frictionally cooperating with the said face to wind a film thereagainst, a movable support for the placing roller at one side of the drum, means for yieldingly urging the support to carry the roller toward the receiving face, and relatively fixed rotatable idler rollers for directing the film to the roller, said rollers being mounted on opposite sides of the support and movable therewith, said rollers being rotated solely by the film passing therearound and one of them delivering direct to the placing roller.

9. In winding apparatus of the character set forth, the combination with a rotatable receiving drum having an internal receiving face, of a standard movably mounted along side the drum, a placing roller journaled on the standard and cooperating with the receiving face, spring means acting on the standard to urge the roller toward said face, and idlers journaled on the standard and directing the film to the placing roller, said idlers having peripheral teeth to engage the marginal openings in the film and being driven by said film.

10. In winding apparatus of the character set forth, the combination with a rotatable receiving drum having an internal receiving face, of a standard movably mounted along-

side the drum, a placing roller journaled on the standard and cooperating with the receiving face, and a rotatable spring drum connected to the standard and acting to move the same in a direction to cause friction between the roller and receiving face.

11. In winding apparatus of the character set forth, the combination with a rotatable receiving drum having an internal receiving face, of a standard movably mounted alongside the drum, a placing roller journaled on the standard and cooperating with the receiving face, a rotatable spring drum connected to the standard and acting to move the same in a direction to cause friction between the roller and receiving face, and manually actuated means for rotating the drum against the action of the spring.

12. In winding apparatus of the character set forth, the combination with a rotatable receiving drum having an internal receiving face, of a standard movably mounted alongside the drum, a placing roller journaled on the standard and cooperating with the receiving face, a rotatable drum having a gear, a rack on the standard engaged with the gear, a spring operating on the drum to urge the roller into frictional engagement with the receiving surface, and a hand wheel on the drum for turning it in opposition to the spring.

13. In winding apparatus of the character set forth, the combination with a drum having an internal receiving face, of a support pivoted adjacent to the drum, a standard slidably mounted on the support, a placing roller journaled on the standard and cooperating with the receiving face, and spring means on the support and acting on the standard to urge the roller toward said surface.

14. In winding apparatus of the character set forth, the combination with a drum having an internal receiving face, of a support pivoted adjacent to the drum, a standard slidably mounted on the support and having a rack, a placing roller journaled on the standard and cooperating with the receiving face, and a spring drum on the support geared to the rack of the standard.

15. In winding apparatus of the character set forth, the combination with a rotatable open-ended drum having an internal cylindrical receiving face, of a support pivoted at one side of the drum, a standard slidably mounted on the support and disposed at the open end of the drum, said standard having a rack, a handled spring drum journaled on the support and having a gear in mesh with the rack, a placing roller journaled on the standard and having frictional cooperation with the receiving face, and idler rolls journaled on opposite sides of the standard in substantial parallel relation to the placing roller.

16. In winding apparatus of the character set forth, the combination with a rotatable receiving drum, of a placing roller coacting therewith, a rotatable idler for directing a film to the placing roller, a swinging arm, relatively swinging rollers yieldingly mounted on the arm and coacting with different portions of the idler, and means for locking the arm with the retaining rollers in coaction with the idler.

17. In winding apparatus of the character set forth, the combination with a rotatable receiving drum, of a placing roller coacting therewith, a rotatable idler for directing a film to the placing roller, a swinging arm, a journal pin on the arm, relatively swinging retaining rollers yieldingly mounted on the pin and coacting with different portions of the idler, and means for locking the arm with the retaining rollers in coaction with the idler.

18. In winding apparatus of the character set forth, the combination with a rotatable receiving drum, of a placing roller coacting therewith, a rotatable idler for directing a film to the placing roller, a standar i idlers located on opposite sides of the standard for directing a film to the placing roller, an arm pivoted on the standard, a journal pin extending on each side of the arm, retaining rollers yieldingly mounted on the pins and cooperating with the idlers, and a latch for holding the arm with the rollers in said cooperative relation.

19. In winding apparatus of the character set forth, the combination with a hollow receiving drum, of means for winding a film against its internal face, said drum comprising separable peripheral sections that permit the removal of the wound film therefrom, a reel section that detachably fits in the drum, and positively retaining means for the reel section against displacement within said drum.

20. In winding apparatus of the character set forth, the combination with a hollow receiving drum, of means for winding a film against its internal face, said drum comprising separable peripheral sections that permit the removal of the wound film therefrom, a reel section that detachably fits in the drum, and means for positively retaining the reel section against displacement within said drum sections, said reel section being released for detachment from the drum when the drum sections are separated.

21. In winding apparatus of the character set forth, the combination with a hollow receiving drum, of means for winding a film against its internal face, said drum comprising separable peripheral sections that permit the removal of the wound film therefrom, said peripheral portions having recessed seats to receive the rim of a reel.

22. In winding apparatus of the charac-

ter set forth, the combination with a hollow drum having a closed end, an open end and a peripheral wall comprising hingedly connected sections, of means for holding together said sections, means extending into the open end for directing a film thereinto and winding it against the internal face of the peripheral wall, a reel for receiving the film, said reel being removable when the peripheral wall is opened, and means for positively retaining the reel against displacement in the drum when said drum is closed.

23. In winding apparatus of the character set forth, the combination with a rotatable receiving drum having an internal receiving face, of means for detachably securing a reel head to the inner portion of the drum so as to rotate therewith, and means for winding a film inside the drum and outside the said head.

24. In winding apparatus of the character set forth, the combination with a receiving drum having an internal receiving face, of a reel comprising a hub and spaced heads carried thereby, one of which is detachable, means for detachably securing the detachable head in detached condition within the drum, and means for winding a film inside the drum and outside the said head, said hub being attachable to the head while the latter is mounted within the drum.

25. In winding apparatus of the character set forth, a reel comprising a head, a split sub-cylindrical expansible hub having a mounting between its ends on the head and having both ends free to move toward and from each other, a second head, and means for detachably mounting the second head at the end of the hub opposite the first head.

26. In winding apparatus of the character set forth, a reel comprising a head, an expansible cylindrical hub having its intermediate portion secured to the head and oppositely extending portions free therefrom, a post carried by the head and extending through the hub, a second head, and means for detachably mounting the second head on the post.

27. A reel for film winding machines comprising a head having an opening, an axial post carried by the head, a cylindrical spring hub surrounding the post and having terminal finger pieces available through the opening in the head, and a second head detachably mounted on the post.

In testimony whereof I affix my signature.

FRANK P. JUDD.