Sept. 2, 1941. F. B. HONCHOCK 2,254,681

SOCKET WRENCH

Filed Oct. 7, 1940

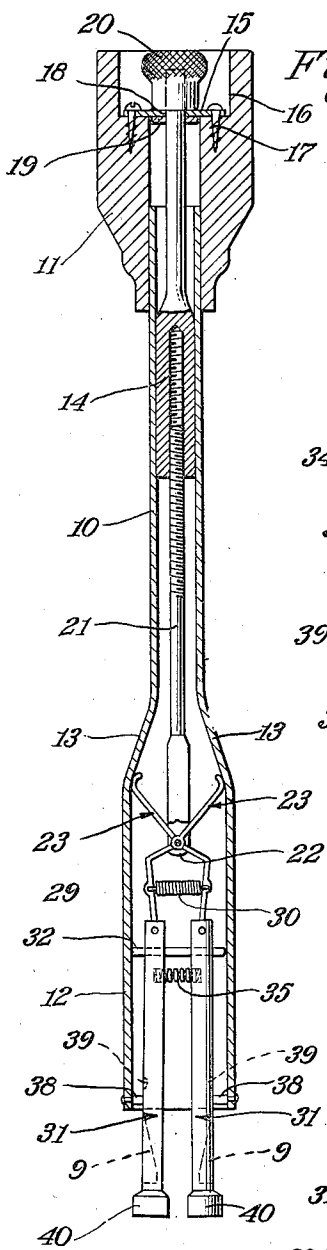

Fig. 1.

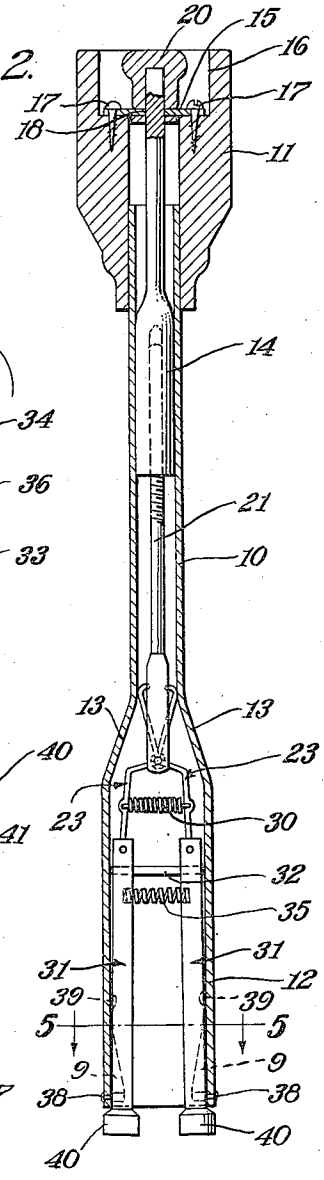

Fig. 2.

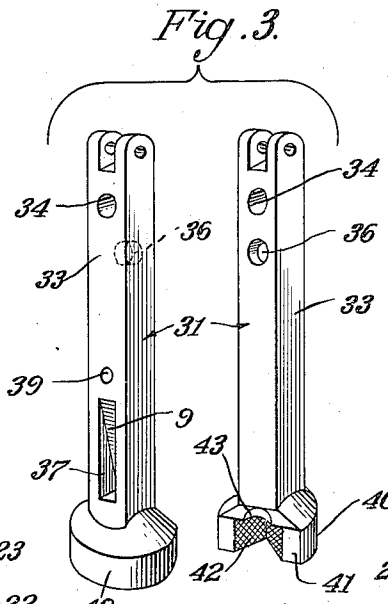

Fig. 3.

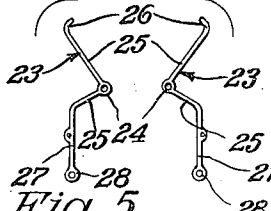

Fig. 4.

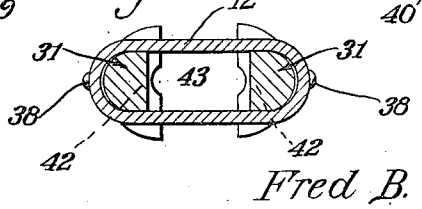

Fig. 5.

Fred B. Honchock

INVENTOR

BY Victor J. Evans & Co.

ATTORNEYS

WITNESS

Patented Sept. 2, 1941

2,254,681

UNITED STATES PATENT OFFICE

2,254,681

SOCKET WRENCH

Fred B. Honchock, Weirton, W. Va.

Application October 7, 1940, Serial No. 360,191

2 Claims. (Cl. 81—128)

This invention relates to socket wrenches and has for an object to provide a socket wrench in which the jaws are adjustable to receive various sizes and shapes of nuts and are held rigidly against displacement in any adjusted jaws.

A further object is to provide a socket wrench which may be easily manipulated to reach nuts in almost inaccessible places and to accommodate projecting screws of various heights above the nut.

A further object is to provide a device of this character which will be formed of a few strong, simple and durable parts, which will be inexpensive to manufacture, and which will not easily get out of order.

With the above and other objects in view the invention consists of certain novel details of construction and combinations of parts hereinafter fully described and claimed, it being understood that various modifications may be resorted to within the scope of the appended claims without departing from the spirit or sacrificing any of the advantages of the invention.

In the accompanying drawing forming a part of this specification:

Figure 1 is a longitudinal sectional view of an adjustable socket wrench constructed in accordance with the invention and showing the jaws adjusted to receive small nuts.

Figure 2 is a longitudinal sectional view of the socket wrench showing the jaws adjusted to receive large nuts.

Figure 3 is a perspective view showing the jaws in disassembled position.

Figure 4 is a side elevation showing the adjusting springs of the jaws in disassembled position.

Figure 5 is a cross sectional view taken on the line 5—5 of Figure 2.

Referring now to the drawing in which like characters of reference designate similar parts in the various views, the socket wrench comprises a tubular casing 10 having a hand grip 11 mounted on one end. The tubular casing is provided with an uniformly enlarged end portion 12 opposite the hand grip. The wall of the enlarged end tapers outwardly from the tube to the enlarged end to provide a conical neck 13.

A hollow internally threaded screw 14 is rotatably mounted in the bore of the tubular casing 10 through the medium of a circular disk 15 which is secured to the inner wall of a recess 16 in the hand grip by screws 17, or other connectors. The disk is provided with an opening 18 to receive the end of the screw 14. A washer 19 is fixed on the screw below the disk 15 and a knob 20 is fixed on the screw above the disk 15 to prevent the screw moving longitudinally of the tubular casing 10.

A threaded shank 21 is engaged in the hollow screw 14 and extends through the conical neck 13. The end of the shank is provided with a recess 22 which receives spreader links 23, best shown in Figure 4.

The spreader links each comprise a central eye 24 from which arms 25 diverge, one of the arms being provided with a curved tip 26 and the other arm being provided with a downwardly extending substantially straight portion 27 which terminates in an eye 28.

The eyes 24 of both links are disposed to register with each other in the recess 22 in the lower end of the shank 21, and a pivot pin 29 is passed through the eyes. When the knob 20 is turned to retract the shank 21, the arms 25 of the spreader links are moved along and are cammed closed together by the wall of the conical neck 13 to spread apart the lower terminals 27 of the links. When the shank is extended, the arms 25 will rise from the low portion to the high portion to the conical neck 13 and permit the arms 27 of the spreader links to be spread apart against the tension of a helical spring 30 which is interposed between the arms 27 and connected to both arms 27 of the spreader links. The helical spring is a strong contraction spring, that is, it tends to constantly pull the lower arms 27 toward each other to hold the upper arms 25 snugly in engagement with the conical wall of the neck 13.

A pair of jaws 31, best shown in Figure 3, are mounted to slide laterally on a shaft 32 disposed transversely of the enlarged end 12 of the tubular casing 10. The shank 33 of each jaw is provided with an opening 34 to receive a respective end of the shaft 32. A weak expansion helical spring 35 is mounted at the ends in recesses 36 formed in the confronting faces of the jaws below the shaft 32. The spring tends to constantly slide the jaws outwardly on the shaft 32.

The outer faces of the jaws are provided with downwardly and inwardly inclined cam surfaces 9 which form the inner walls of recesses 37 formed in the jaws. Pins 38 are engaged through the extremity of the enlarged end 12 of the tubular casing 10. When the jaws are retracted toward the conical neck, the pins 38 ride into the recesses 37 and onto the cam surfaces 9 to hold the jaws in parallel relationship. Notches 39 are formed in the jaws above the recesses 37 to receive the pins when the jaws are extended out-

wardly to their full extent from the enlarged tubular end 12.

The jaws are provided at their free ends with working heads 40 having flat confronting faces 41 provided with V-shaped recesses 42 which coact in receiving various sizes of nuts. The heads are provided with semi-circular recesses 43 above the V-shaped recesses to accommodate the projecting ends of bolts.

Since the operation of the parts has been described as a description of the parts progressed, it is thought the invention will be fully understood without further explanation.

What is claimed is:

1. A socket wrench comprising, a tubular casing, a hollow hand grip on the upper end of the casing, the lower end of the casing being uniformly enlarged, the casing tapering outwardly to the enlarged portion to form a conical neck, a hollow internally threaded screw mounted in the casing having an operating knob disposed in the hollow hand grip, a threaded shank engaging the hollow screw, spreader links having diverging arms pivotally connected to the lower end of the threaded shank, a spring connecting the lower arms of the links yieldably holding the upper ends of the arms against said neck, the lower arms of the spreader links extending parallel with each other, a pair of jaw members pivotally secured to the lower end of the last-named arms, a shaft movable in the enlarged portion of the casing upon which said jaws are slidably mounted, a helical spring between the jaws yieldably holding the upper ends of the jaws spread apart on said shaft, the lower portions of the jaws being formed with recesses having inclined inner walls, and pins carried by the enlarged portion of the casing engaged in said recesses against said walls and holding the jaws parallel.

2. The structure as in claim 1 and in which said jaws terminate in heads provided with confronting triangular recesses to receive screws, the heads being provided above the triangular recesses with substantially semi-circular recesses to receive the projecting end of the screws when the heads are closed upon nuts carried by the screws.

FRED B. HONCHOCK.