Feb. 13, 1934. E. A. STALKER 1,946,921

MEANS OF PREVENTING SPINNING IN AIRCRAFT

Filed Feb. 16, 1931

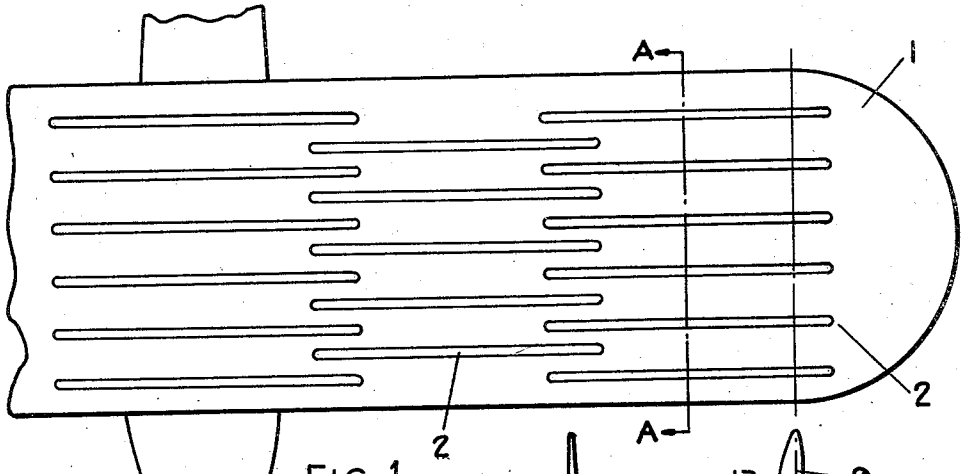

FIG. 1

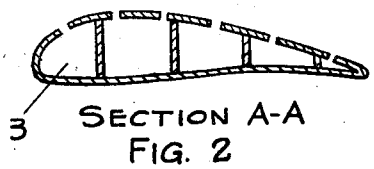

SECTION A-A
FIG. 2

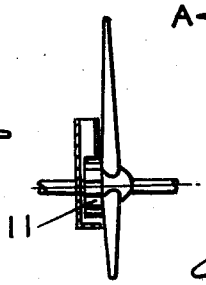

FIG. 5

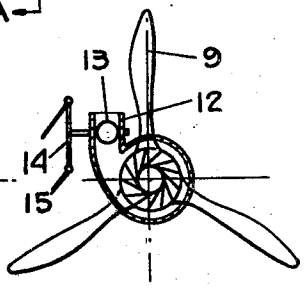

FIG. 6

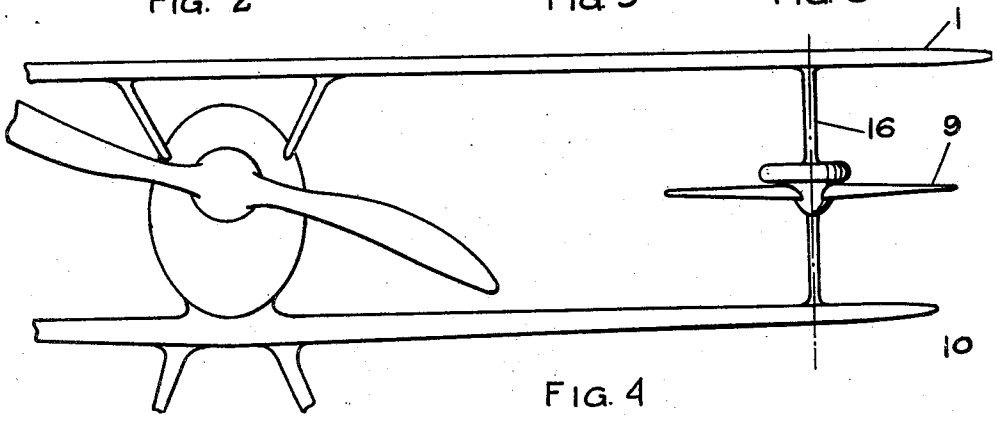

FIG. 4

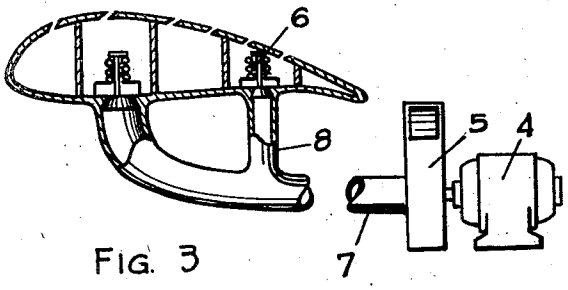

FIG. 3

INVENTOR
Edward A. Stalker

Patented Feb. 13, 1934

1,946,921

UNITED STATES PATENT OFFICE

1,946,921

MEANS OF PREVENTING SPINNING IN AIRCRAFT

Edward A. Stalker, Ann Arbor, Mich.

Application February 16, 1931. Serial No. 515,961

10 Claims. (Cl. 244—12)

My invention relates to a means of preventing spinning in aircraft by the adjustment of the air pressure on the wings. It also relates to means of providing for the safe use of boundary layer energization by providing against a serious reduction of normal lift when the pumping means fails to function. It also provides against a loss of lift due to a chordwise exchange of pressure when the pumping means fails, by providing an effective and practical method. The method must provide great airtightness and be light.

As is well known, spinning causes the largest percentage of accidents. A spin when entered during the procedure of landing is very likely to be fatal because several hundred feet of altitude are needed to effect recovery. Spinning is caused by exceeding the maximum lift angle which introduces an unstable lateral balance which may be upset by such things as wind currents and movement of the controls. In this precarious condition of balance the ailerons are of very little use and may actually help the spin instead of preventing it.

Attention of investigators has been focused on the phenomenon of the spin, that is, the mechanics of its motion, and the development of lateral control to oppose or correct the spin. I propose to eliminate the spin by so rearranging the air pressures on a normal wing that the spin cannot take place. Spinning is only possible because the pressures are such as to push one wing forward and up and the other wing backward and downward. These pressures may be adjusted between both wings by causing the pressures on symmetrically disposed areas to equalize through the interior of the wing. If the pressures are equal in every sense on both sides of the center of gravity of the airplane spinning will not be possible.

For angles of attack near the normal maximum spinning is best prevented by permitting a flow from the region near the tip to the region midway between the tips. This is the region of largest pressure difference when the spin is just beginning. The center section of the wing has not yet burbled but the tip section has because its relative angle of attack is larger due to the incipient downward movement.

Lateral compartments within the wing provide for the equalization of the pressure between opposite and symmetrically spaced areas which contain openings in the surface. The equalization of pressure must take place spanwise and not chordwise. As is well known, the greatest suction over the upper surface of a wing is near the leading edge, and the greatest pressure difference is between the areas near the leading and trailing edges. If chordwise equalization is not prevented this will be the mode of equalization (and not spanwise) because of the greater pressure differences chordwise. Chordwise equalization will lead to a loss of efficient operation of the wings and must be prevented. Likewise a flow into the wing from any source induced by the low pressure over the upper surface at the opening will reduce the lift, and should be prevented.

Although the equalization of the pressure on the wing spanwise is the final end sought, the procedure by which it is accomplished entails removing the boundary layer. This layer is the strata of air close to an aerodynamic body in which the normal velocity has been reduced by friction with the body surface. If the boundary layer is drawn into the wing the lift will increase as is well known.

Effective lateral control is essential for slow landing speeds, but if a conventional aileron is used for lateral control it will give insufficient rolling moment. A conventional aileron depends for its rolling effect on changing the camber of a wing so that that portion ahead of the aileron has the suction pressure increased on its upper surface and vice versa on the opposite wing. In the wing I have described, with means to equalize the pressures between the wings such an aileron cannot function sufficiently because the pressures it creates will almost instantaneously be equalized between the wings. Ailerons must be provided which do not depend on varying the pressure over the main wings.

I attain the above objects by the devices illustrated in the accompanying drawing in which

Figure 1 is a plan view of the aircraft; Figures 2 and 3 are vertical sections through the wing; Figure 4 is a front elevation of the aircraft showing the location of the ailerons; Figures 5 and 6 show the elevation and plan of the ailerons.

In Figure 1 the left wing is indicated by 1 and the openings in its surface by 2. The wing contains compartments 3 shown in Figure 2. These compartments run spanwise and each compartment of the left wing connects with the corresponding compartment in the right wing so that the pressures on opposite wings may attain a degree of equalization through the compartment. At the same time the pressure, say in the second

compartment from the leading edge of the right wing, cannot equalize with the pressure in the first compartment of the left wing. This is very important, for spinning depends for its inception and maintenance on a spanwise difference in pressure, and the prevention of spinning depends on the elimination of this difference. The elimination will not occur satisfactorily if there is an easier route for the pressure to travel. Furthermore, the chordwise distribution of pressure must not be greatly disturbed in the interests of efficiency.

In Figure 3 is shown a means of removing the boundary layer of the wing which permits the operation of the wing at high angles of attack. The motor 4 drives a pump 5 which removes the air from the compartments 3 and so causes an inward flow of air through the openings 2. Check valves 6 are provided so that the air may pass only out of the wing toward the suction pump. Thus if the motor fails to operate the valves close and the spanwise equalization as described above may be consummated.

In Figure 4 is shown an aileron arrangement which does not depend on changing the pressure distribution over the main lifting wings. An airscrew 9 is provided of such a design that it autorotates at all flying angles. An upward thrust is provided and its magnitude depends on the rate of rotation. Rolling moments may be obtained by the variation of the rate of rotation. This is accomplished by varying the discharge of air from the blower 11 driven by the airscrew 9. When there is no discharge no work is done by the blower and it runs fast and vice versa. In the exit 12 of the fan is located a butterfly valve 13 which is controllable by the pilot through any suitable mechanism, in this illustration the crank arms 14 and the cables 15. The aileron 9 may be supported by any suitable structure. In the drawing a tube 16 between the wings forms the support.

A similar aileron is described in my patent application filed January 5, 1931, Serial Number 506,619. It is not my object to claim the construction broadly here but its location and only such features as are novel and beneficial in an airplane of fixed wings, designed to provide for the elimination of spinning without destroying the maneuverability of the airplane.

The above aileron could be carried at the wing tip in the plane of the wing but without depending on changing the pressure distribution on the wing for the rolling moment.

In the limiting case of placing holes close together, they form a slot.

It is to be understood that I do not limit myself to wings stationary with respect to the aircraft but that rotating wings and all types of wings are included.

I claim:

1. In combination in an aircraft whose wings possess a perforated surface, an autorotative element disposed eccentrically to the aircraft's plane of symmetry, a means of pumping actuated by the element, and means to alter the quantity of fluid handled by the pumping means to control the rolling movements of the airplane.

2. In combination in an aircraft a wing possessing a perforated surface and subdivided into spanwise compartments, a pumping means driven by a prime mover, means of communication between the pumping means and the compartments, and automatic means to prevent a chordwise exchange of pressure when the pumping means fails to function.

3. In combination in an aircraft, a wing possessing a perforated surface and subdivided into spanwise compartments, a pumping means driven by a prime mover, means of communication between the pumping means and the compartments, automatic means to seal the compartments from each other when the pumping means fails to function.

4. In combination in an aircraft an autorotative element disposed eccentrically to the aircraft's plane of symmetry, a means of pumping actuated by the element, and means to alter the quantity of fluid handled by the pumping means to control the rolling movements of the airplane.

5. In combination in an aircraft an autorotative element disposed eccentrically to the aircraft's plane of symmetry, and whose plane of rotation is approximately horizontal, a means of pumping actuated by the element, and means to alter the quantity of fluid handled by the pumping means to control the rolling movements of the airplane.

6. In combination in an aircraft a wing possessing a set of openings distributed over the upper surface, a means of pumping to cause a flow through the openings, and means to seal automatically the wing from the pumping means when the latter fails to function.

7. In combination in an aircraft, a wing possessing an elongated opening in the upper surface over the central portion of the span, like openings in the upper surface near the outer extremity of the span and an enclosed passage extending therebetween to permit energizing the boundary layer of one extremity of the wing at the expense of energy in the flow over the central portion.

8. In combination in an aircraft, a wing possessing an elongated opening in the upper surface over the central portion of the span, like openings in the upper surface near the outer extremity of the span and an enclosed passage extending therebetween to permit energizing the boundary layer of one extremity of the wing at the expense of energy in the flow over the central portion and the other extremity.

9. In combination in an aircraft a wing possessing an elongated opening in the upper surface over the central portion of the span, like openings in the lateral extensions of the wing, an enclosed passage extending therebetween, a blower to energize the boundary layer and automatic means to seal the wing from the blower when it fails to function.

10. In combination in an aircraft, a hollow wing, a set of openings in the upper surface distributed chordwise and leading into the wing interior, a means of pumping to cause an inward flow through the openings, compartments in the wing to segregate the wing openings at localities of different pressure, and automatic means to seal the compartments from each other and from the pumping means when the latter fails to function.

EDWARD A. STALKER.