July 8, 1958 W. C. EDDY, JR 2,842,110

CARBURETOR THROTTLE CONTROL DEVICE

Filed Dec. 31, 1956 3 Sheets-Sheet 1

FIG. 1

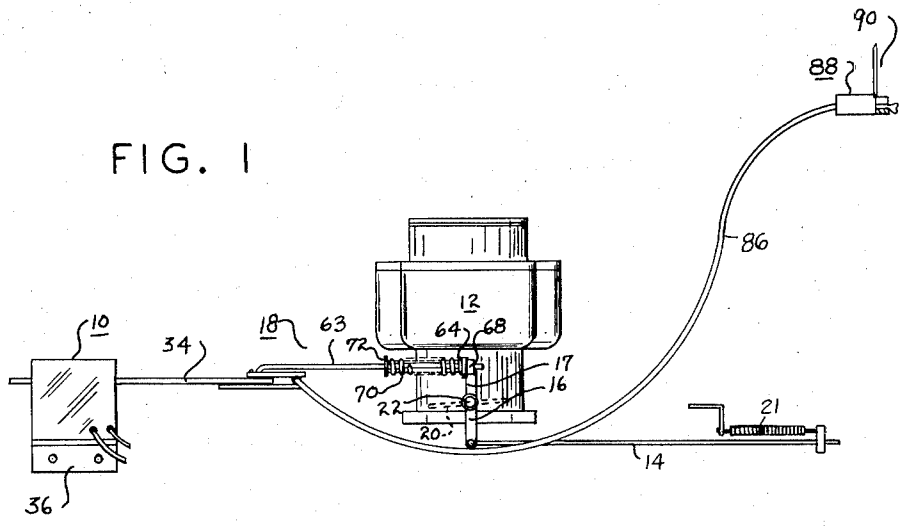

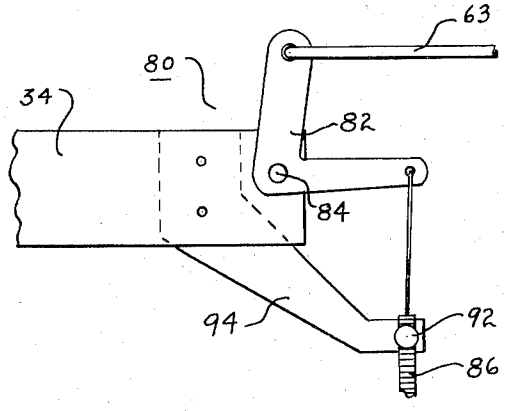

FIG. 2

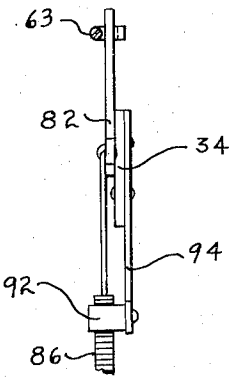

FIG. 3

INVENTOR.

WILLIAM C. EDDY, JR.

BY

M. A. Hobbs

ATTORNEY

July 8, 1958 W. C. EDDY, JR 2,842,110

CARBURETOR THROTTLE CONTROL DEVICE

Filed Dec. 31, 1956 3 Sheets-Sheet 2

FIG. 4

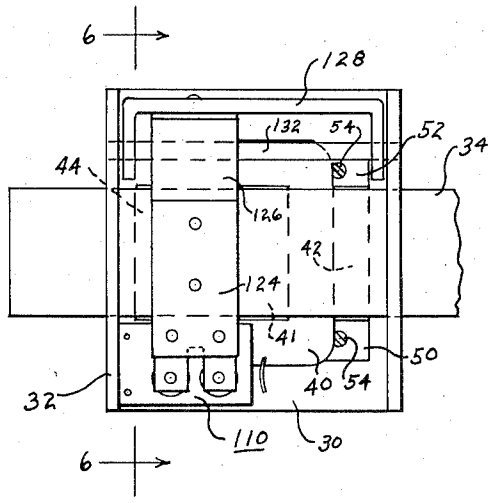

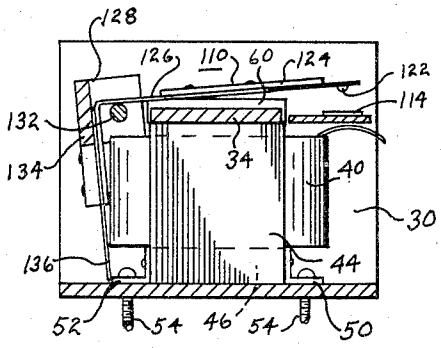

FIG. 6

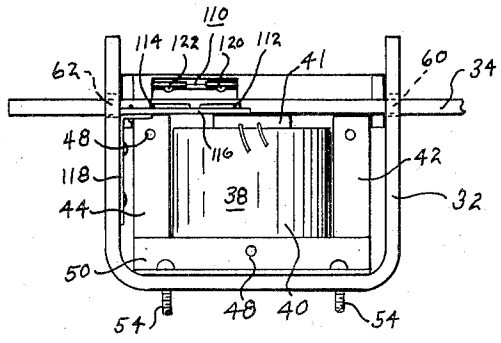

FIG. 5

INVENTOR.

WILLIAM C. EDDY, JR.

BY M. a. Hobbs

ATTORNEY

July 8, 1958 W. C. EDDY, JR 2,842,110

CARBURETOR THROTTLE CONTROL DEVICE

Filed Dec. 31, 1956 3 Sheets-Sheet 3

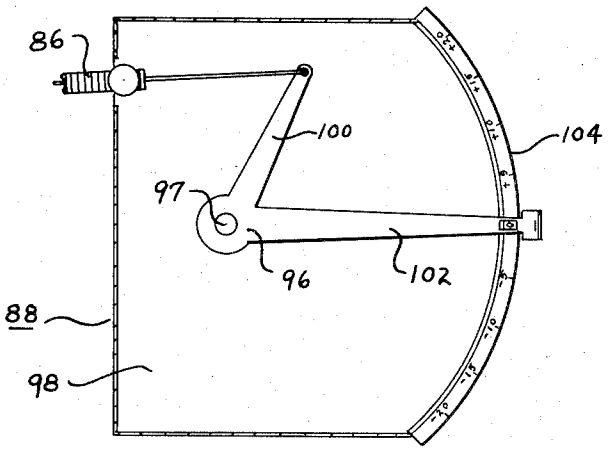

FIG. 7

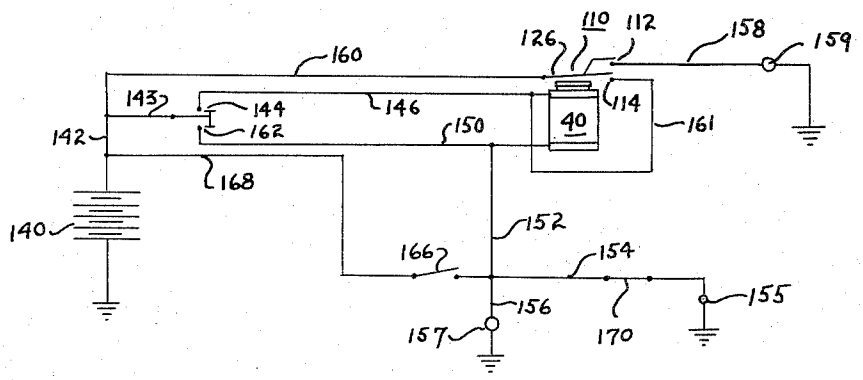

FIG. 8

INVENTOR.
WILLIAM C. EDDY, JR.
BY M. A. Hobbs
ATTORNEY

United States Patent Office 2,842,110 Patented July 8, 1958

2,842,110

CARBURETOR THROTTLE CONTROL DEVICE

William C. Eddy, Jr., Michigan City, Ind., assignor to Television Associates, Inc., Michigan City, Ind., a corporation of Illinois

Application December 31, 1956, Serial No. 631,945

10 Claims. (Cl. 123—102)

The present invention relates to an engine control mechanism and more particularly to an auxiliary control mechanism for the throttle valve of an internal combustion engine. This invention is an improvement on the type of throttle control mechanism described and claimed in copending application Serial No. 608,827, filed September 10, 1956.

One of the principal objects of the present invention is to provide a relatively simple, compact carburetor throttle setting or holding mechanism which can readily be installed on an engine and thereafter easily inspected, serviced and cleaned, and which can be rendered operative or inoperative immediately in response to the will of the driver or operator.

Another object of the invention is to provide a throttle holding mechanism which is adapted for installation on all standard or conventional internal combustion engines without substantial modification in either the mechanism or in the parts of the engine to which it is connected.

Still another object is to provide a throttle control mechanism of the aforesaid type which does not require any special skill, equipment or tools to install, or any special skill or knowledge to operate when installed on a standard automobile or truck.

A further object is to provide a setting or holding mechanism for the throttle of an internal combustion engine, which permits acceleration and deceleration to preselected speeds without disturbing the initial setting of said mechanism.

Other objects and advantages of my invention will become apparent from the following descritpion and accompanying drawings, wherein:

Figure 1 is a side elevational view of my throttle control mechanism showing it operatively connected to the conventional throttle control mechanism of a standard internal combustion engine for an automobile or truck;

Figure 2 is an enlarged plan view of a portion of the linkage connecting the control mechanism to the throttle, including the structure for changing the position of the throttle without modifying the initial setting on the control mechanism;

Figure 3 is an enlarged end view of the portion of the linkage shown in Figure 2;

Figure 4 is a top plan view of my throttle control mechanism with the cover removed;

Figure 5 is a side elevational view of the throttle control mechanism with the cover removed;

Figure 6 is a vertical cross sectional view of the throttle control mechanism, taken on line 6—6 of Figure 4;

Figure 7 is a horizontal view of a manual adjustment unit for my throttle control mechanism; and

Figure 8 is a wiring diagram of the electrical system of my throttle control mechanism.

In the drawings numeral 10 indicates the present throttle control mechanism, 12 a carburetor mounted on an internal combustion engine (not shown), 14 a part of the conventional throttle control linkage operated by

the driver through the accelerating pedal (not shown). In this installation the only part or element which is changed in connecting my throttle control mechanism to the carburetor is the throttle lever, the latter being replaced with a lever 16 having an extension 17 for the control mechanism linkage 18. The carburetor throttle 20 is shown in its closed position and is operated by linkage 14 through lever 16 and throttle shaft 22, and in normal operation is closed by a spring 21 connected to linkage 14 and anchored at a fixed point in the engine compartment. For the purpose of the present description the internal combustion engine including the carburetor is a conventional engine of the type used in any one of the well known makes of automobiles or trucks, although the present mechanism may be used to an advantage on some industrial and marine inboard engine installations. The carburetor shown is one of the down draft, float type and may be either single or multiple barrel.

The auxiliary throttle control mechanism 10 consists of an electro-magnet 30 mounted on a bracket 32, and a sliding iron or steel bar 34 connected to extension 17 of the throttle lever by linkage 18, and is mounted rigidly in a suitable position on some part of the engine or vehicle frame by a fixture 36 attached to bracket 32. The magnet may be considered, for the purposes of the present description, a conventional portative or holding electromagnet 38 consisting of coil 40 mounted on a core 41 of laminated iron connected at the bottom to posts 42 and 44 by a bar 46. The layers of metal forming the core, bar and posts are secured together by a plurality of rivets 48 extending laterally through the bar and also through side brackets 50 and 52 which together with bolts 54 secure the magnet in place on bracket 32. When the coil is energized bar 34 completes the magnetic circuit between core 41 and posts 42 and 44, all of which are preferably of pure iron or other readily demagnetizable metal.

Bar 34 is supported by the upper ends of core 41 and posts 42 and 44 and is adapted to move longitudinally thereon guided by slots 60 and 62 in the side arms of bracket 32 through which said bar passes, said slots being somewhat larger than the bar to avoid binding in the event true alignment is not obtained when the mechanism is installed on the engine. Bar 34 is reciprocated longitudinally as the throttle is opened and closed by linkage 18 consisting of a rod 63 slidably journalled in a trunnion 64 mounted on extension 17 of lever 16. A nut 68 threaded onto the end of rod 63 forms a one way connection between the throttle lever and rod 63. The trunnion is normally held against the nut by a spring 70 mounted on rod 63 and reacting between the trunnion and a fixed collar 72 on said rod. The effective length of rod 63 can be varied to make adjustments by screwing the nut either to the right or left as shown in Figure 1. The details of the standard throttle linkage 14 including an accelerating pedal are shown in the above mentioned copending patent application.

After the driver of a vehicle has made a throttle setting for cruising he may wish to vary the vehicle speed temporarily without disturbing the initial setting. To permit the driver to accomplish this step an adjustment mechanism 80 is included in linkage 18 and, in the embodiment illustrated, is operated manually by the driver from the instrument panel. In this mechanism a bell crank lever 82 is pivoted at numeral 84 to bar 34 and one arm thereof is pivotally connected to a push-pull cable 86, such as a Bowden wire, which terminates in a control unit 88 located on instrument panel 90. The end of Bowden wire 86 adjacent lever 82 is secured to a trunnion 92 rotatably mounted on a bracket 94 secured to

and carried by bar **34**. It is thus seen that lever **82**, bracket **94** and the respective end of the Bowden wire move in unison with bar **34** and rod **63** for any fixed setting of the adjustment mechanism **80**.

A setting on the adjustment mechanism is made in unit **88** consisting of a bell crank lever **96** pivoted at numeral **97** to the housing or frame **98** of the unit having one arm **100** connected to the Bowden wire **86** and the other arm **102** forming an operating handle for the driver to use in making an adjustment. A scale of miles corresponding to the changes made in the throttle setting by the movement of arm **102** is provided on a quadrant **104** adjacent said arm, said scale indicating plus or minus the number of miles per hour increase or decrease, respectively, from the initial throttle setting by throttle control unit **10**. By moving arm **102** in the clockwise direction, as shown in Figure 7, Bowden wire **86** rotates lever **82** in the clockwise direction, as shown in Figure 2, lengthening the overall length of linkage **18** and thus moving the throttle toward closed position for any fixed position of bar **34**. Conversely, by moving arm **102** in the counter clockwise direction the Bowden wire rotates lever **82** in the counter clockwise direction shortening the overall length of linkage **18** and thus moving the throttle further toward fully opened position. While the scale indicates changes in miles from the initial setting of the throttle control mechanism, the adjustment mechanism actually changes the position of the throttle which may not always result in a corresponding change in engine or vehicle speed, although on relatively level terrain a change in throttle position results in a substantially corresponding change in vehicle speed.

While the Bowden wire control mechanism represents a suitable structure for controlling adjustment mechanism **80** other flexible connections can be substituted for the wire or an electrical device such as that disclosed in my above mentioned copending application may be used in its place. In some installations, possibly for reasons of economy, adjustment mechanism **80** along with Bowden wire **86** and unit **88** may be omitted from the throttle control mechanism. In such an installation bar **34** and rod **63** are connected directly with one another.

One of the important features of the present invention is the combination in a single unit of the holding coil for the throttle connection and the relay for the control circuit for the mechanism. This feature makes a compact, versatile and economical unit which can readily be installed on an engine without making any major changes in the original throttle control linkage or in the electrical circuit for the engine. The principal switch **110** consists of a pair of stationary contacts **112** and **114** supported by and insulated from bracket **32** by a Bakelite panel **116** mounted on a fixture **118** on the side of said bracket and a pair of movable contacts **120** and **122** connected with one another and supported by a Bakelite panel **124** and arm **126**. The arm is rigidly attached by rivets to a counter balance member **128** pivoted at each end on a pin **132** which is supported by the two arms of bracket **32**. Member **128** is provided with a relatively thick section **134** which is of sufficient weight to lift and hold contacts **120** and **122** in their open position, as shown in Figures 5 and 6, except when arm **126** has been pulled and held down by electro-magnet **38**. The upward movement of arm **126** is limited by finger **136** which is attached to member **128** and adapted to contact the edge of bracket **52** as a stop therefor. In this embodiment bar **34** is located between the magnet and arm **126** and is free to move across the top of said magnet when said arm is either in raised or lowered position.

The electrical circuit for my throttle control mechanism is shown in Figure 8. The circuit for initially energizing the holding coil consists of a storage battery **140**, leads **142** and **143**, two-way manual control switch **144**, lead **146**, coil **40**, leads **150** and **152**, and thence to ground through leads **154** of the directional lights **155** and lead

156 of the tail light **157**. The current through lead **156** is not sufficient to light the tail light. When coil **40** is thus energized arm **126** is pulled downwardly closing switch **110** completing the circuit **158** to an indicator light **159** on the instrument panel and a holding circuit for coil **40** consisting of leads **142**, **160**, **161** and lead **146**. The coil will remain energized and switch **110** closed after manual control switch **144** is opened, and the throttle control mechanism holds the throttle in the position selected at the time the coil was initially energized. Indicator light **159** remains on as long as the coil is energized.

Coil **40** can be rendered inoperative and the throttle immediately released under any one of several different conditions. The driver can manually interrupt the operation of the throttle control mechanism by closing switch **162** which connects coil **40** with battery **140** through leads **142**, **143**, and **150**, completing a circuit bucking the holding circuit previously described and thus rendering the coil inoperative. When this is done switch **110** opens and remains open until manual control switch **144** is again closed and the circuit controlled thereby completed as described above. When the driver applies the vehicle brakes, switch **166** is closed completing another circuit bucking the holding circuit, consisting of lead **142**, **168**, **152** and **150**. Switch **166** may be operated mechanically or hydraulically such as shown in the above mentioned copending application. Further the coil may be rendered inoperative by opening switch **170** in lead **154** to the directional lights. When this switch is opened the ground lead for the coil is broken, thus de-energizing the coil.

In the operation of the automobile having one of the present auxiliary throttle control mechanisms installed thereon the driver operates the vehicle in the usual manner until he manually brings the mechanism into operation by momentarily closing manual switch **144**. Until this is done the throttle valve of the carburetor is controlled exclusively by the acceleration pedal. As the pedal is pushed toward the floor board, throttle control linkage **14** rotates throttle lever **16** and extension **17** in a counter clockwise direction, as viewed in Figure 1, opening the throttle valve and simultaneously sliding rod **63** and bar **34** to the left. Spring **70** is not compressed and trunnion **64** and nut **68** move together since until magnet **38** is energized bar **34** moves freely in slots **60** and **62** and on core **41** and posts **42** and **44**.

When the driver reaches a long, uninterrupted stretch of highway where little or no change in the throttle setting is required for extended periods of time, he can relieve himself of the constant manual operation of the accelerating pedal by actuating the auxiliary throttle control mechanism. This is done by first selecting with the accelerating pedal the desired opening of the throttle valve and then closing switch **144** on the instrument panel. This energizes magnet **38** thus holding bar **34** firmly against the upper end of core **41** and posts **42** and **44** with sufficient force that the bar can not be moved by either spring **21** or spring **70**. Hence the throttle valve is held in the selected partially open position against the force of spring **21** tending to return the valve to its closed position.

If the driver wishes to accelerate to pass another vehicle, he merely pushes the accelerating pedal further toward the floor board causing linkage **14** to rotate lever **16** further in the counter clockwise direction to open the throttle the desired amount. As lever **16** is rotated extension **17** being integrally joined thereto is likewise rotated; however, since bar **34** is held firmly by magnet **38**, trunnion **64** which is attached to extension **17** slides on rod **63** toward the left, as seen in Figure 1, compressing spring **70**, thus leaving bar **34** set in its preselected position on magnet **38**. When the driver wishes to return to the initially preselected speed, he merely removes his foot from the accelerating pedal and the throttle valve is returned to its partially opened position as determined by the position of the bar **34** on magnet **38**.

Whenever the driver applies the vehicle brakes, switch

166, which is controlled by the brake, closses the circuit bucking the coil holding circuit thus rendering the magnet inoperative which thereupon releases bar 34. When this bar is released spring 21 immediately returns the throttle valve to its closed position. If the driver at any time wants to render the auxiliary control mechanism inoperable he merely momentarily closes switch 162 which renders the coil inoperative. Once the mechanism is rendered inoperable in either of the foregoing ways, switch 144 must again be closed to reactuate the mechanism after a desired throttle position has been established.

If the driver of the vehicle wishes to change speed, for example, to pass or trail another vehicle, without disturbing the initial setting of the auxiliary throttle control mechanism he merely moves arm 102 to a setting along the positive part of the scale to increase his speed or along the negative part of the scale to decrease his speed. When the conditions for the modified speed have passed, the driver can return to the original setting of the mechanism by merely returning arm 102 to its zero position at the center of the quadrant.

The present auxiliary throttle control mechanism, in addition to making long distance driving easier and more relaxing, provides a definite safety factor on slick roads and streets by permitting the driver to easily maintain a constant or substantially constant speed under such conditions without interfering with complete normal control of the vehicle in response to unexpected hazards.

In the present throttle control mechanism, if the electrical system for the mechanism develops trouble or is in any way interrupted in its operation, magnet 38 is immediately de-energized, thus freeing bar 34 and permitting the throttle to return to its closed position. This is an important safety feature of the present mechanism.

While only one embodiment of my mechanism has been described herein, various changes and arrangements and substitution of equivalent parts and means may be made without departing from the scope of the present invention.

I claim:

1. An auxiliary throttle control mechanism for an internal combustion engine, comprising a magnetic attractable movable member, a linkage for connecting said member with the throttle, a magnetic means for holding said member in preselected positions and the throttle in desired open positions, a means in said linkage adapted to yield to pressures tending to open the throttle, means for varying the preselected setting of the throttle without disturbing the initial setting of said movable member, and an electrical control circuit for said magnetic means having a holding circuit controlled by a switch operated by said magnetic means.

2. An auxiliary throttle control mechanism for an internal combustion engine, comprising a movable member, a linkage for connecting said member with the throttle, a magnetic means for holding said member in preselected positions and the throttle in desired open positions, means for varying the preselected setting of the throttle without disturbing the initial setting of said movable member, and an electrical control circuit for said magnetic means having a holding circuit controlled by a switch operated by said magnetic means.

3. A throttle control mechanism for an internal combustion engine, comprising a movable member, a linkage for connecting said member with the throttle, a magnetic means for holding said member in preselected positions and the throttle in desired open positions, manually operated means in said linkage for increasing and decreasing the effective length of said linkage to decrease or increase engine speed, respectively, and an electrical control circuit for said magnetic means having a holding circuit controlled by a switch operated by said magnetic means.

4. A throttle control mechanism for an internal combustion engine, comprising a movable member, a linkage for connecting said member with the throttle, a magnetic means for holding said member in preselected positions and the throttle in desired open positions, a means in said linkage adapted to yield to pressures tending to open the throttle, and manually operated means in said linkage for increasing and decreasing the effective length of said linkage to decrease or increase engine speed, respectively.

5. In a throttle setting mechanism for an internal combustion engine: a unitary control device, comprising an electro-magnetic means including an electrical coil, a core and oppositely disposed posts connected to said core by a bar, a magnetic attractable movable member contacting the respective ends of said core and posts and adapted to be connected to the throttle, and a control circuit for said coil having a switch operated by said coil.

6. In a mechanism for holding the throttle of an internal combustion engine in preselected positions: a unitary control device, comprising magnetic means including an electrical coil and a core, a magnetic attractable movable member contacting the end of said core and adapted to be connected to the throttle, and a control circuit for said coil having a switch operated by said coil.

7. In a mechanism for holding the throttle of an internal combustion engine in preselected positions, an electromagnetic means including an electrical coil, a core and oppositely disposed posts connected to said core by a bar, a magnetic attractable movable member contacting the respective ends of said core and posts, a linkage for connecting said movable member to the throttle, a means in said linkage adapted to yield to pressures tending to open the throttle, manually operated means in said linkage for increasing and decreasing the effective length of said linkage to decrease or increase engine speed, respectively, and an electrical control circuit for said magnetic means having a holding circuit controlled by a switch operated by said magnetic means.

8. In a throttle setting mechanism for an internal combustion engine a unitary control device comprising magnetic means including an electrical coil and a core, a magnetic attractable movable member contacting the end of said core and adapted to be connected to the throttle, means for varying the preselected setting of the throttle without disturbing the initial setting of said movable member, and an electrical control circuit for said magnetic means having a holding circuit controlled by a switch operated by said magnetic means.

9. In a mechanism for holding the throttle of an engine in selected open positions, an electrically operated means for controlling the throttle, a circuit for energizing said means, a manually operated switch in said circuit, a holding circuit for said means having a switch closed and held closed by said means, and a circuit having a manually operated switch for rendering said means inoperative and opening said holding circuit.

10. In a mechanism for holding the throttle of an engine in selected open positions, an electrically operated means for controlling the throttle, a circuit for energizing said means, a holding circuit for said means having a switch operated by said means, and a circuit having a manually operated switch for rendering said means inoperative and opening said holding circuit.

References Cited in the file of this patent

UNITED STATES PATENTS

2,188,704	Claytor	Jan. 30, 1940
2,711,235	Pokorny	June 21, 1955
2,712,762	Pavlik	July 12, 1955