Oct. 22, 1957 N. B. SCHROCK 2,810,829

BROAD BAND COAXIAL CRYSTAL DETECTOR AND LINE TERMINATION DEVICE

Filed Sept. 27, 1954 2 Sheets-Sheet 1

FIG_1_

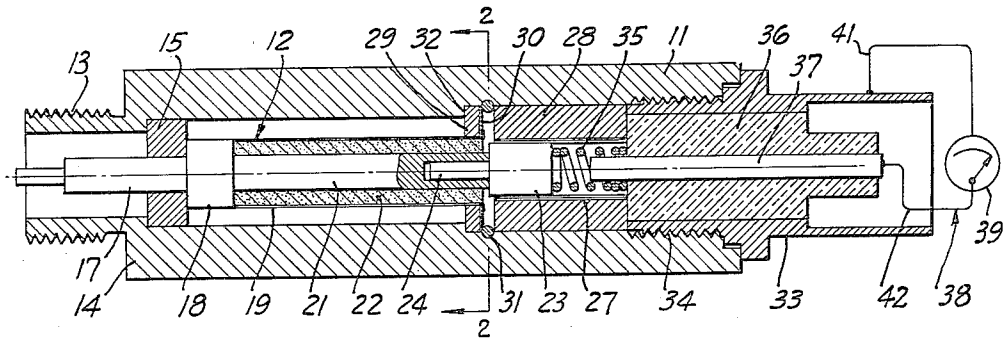

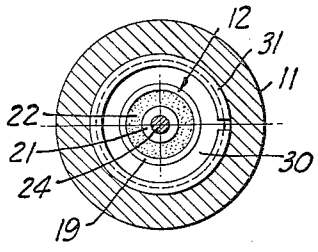

FIG_2_

FIG_3_

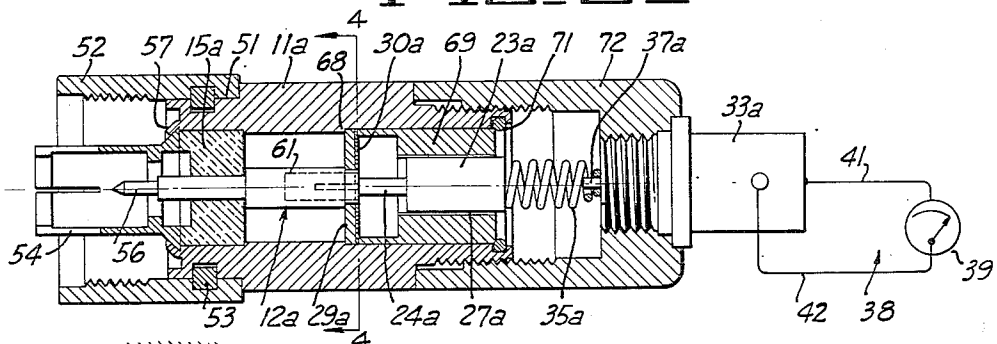

FIG_5_

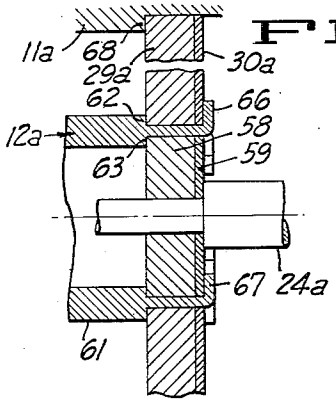

FIG_4_

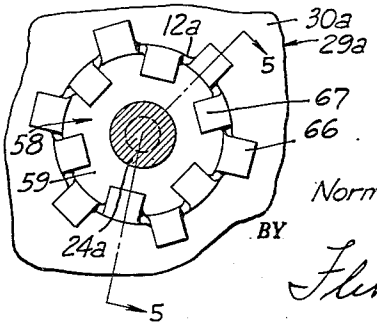

INVENTOR.
Norman B. Schrock

BY

Fleit & Swain
ATTORNEYS

Oct. 22, 1957 N. B. SCHROCK 2,810,829

BROAD BAND COAXIAL CRYSTAL DETECTOR AND LINE TERMINATION DEVICE

Filed Sept. 27, 1954 2 Sheets-Sheet 2

FIG. 6

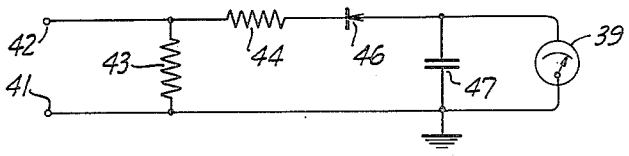

FIG. 7

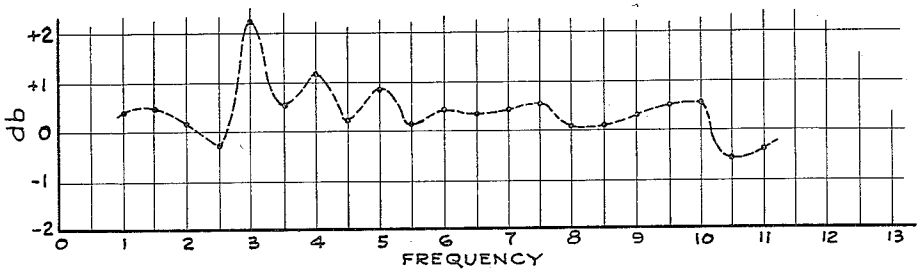

FIG. 8

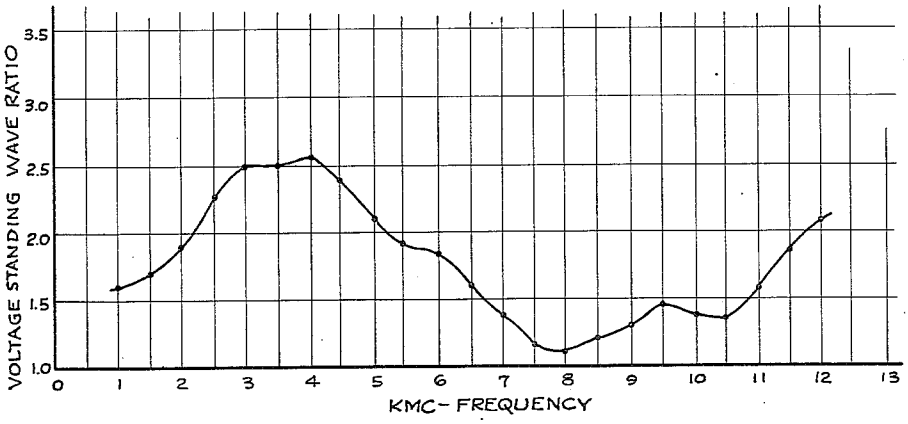

INVENTOR.
Norman B. Schrock

BY
Fleher & Swain

ATTORNEYS

United States Patent Office 2,810,829 Patented Oct. 22, 1957

2,810,829

BROAD BAND COAXIAL CRYSTAL DETECTOR AND LINE TERMINATION DEVICE

Norman B. Schrock, Los Altos, Calif., assignor to Hewlett-Packard Company, Palo Alto, Calif., a corporation of California

Application September 27, 1954, Serial No. 458,550

6 Claims. (Cl. 250—31)

This invention relates generally to apparatus for use in high frequency systems of the coaxial type, and more particularly to a crystal detector mount having a matched impedance over a broad microwave frequency band.

Whenever a detector is used to monitor or measure microwave energy it is desirable that its impedance be matched to that of the coaxial system with which it is associated. This is necessary if one is to obtain a true indication of the power in the system. When there is a large mismatch, there are large standing waves in the system and the indication of energy is erroneous. It is also desirable to obtain a constant sensitivity over a broad band of frequencies while maintaining a low standing voltage standing wave ratio (VSWR). Many attempts have been made to achieve these aims. Probably the most successful mounts to date incorporate a disk resistance as the coaxial termination, with the crystal detector connected in shunt to the resistance. In general, crystals have a very high impedance and their shunting effect is of little consequence upon the resistance of the termination. However, at certain frequencies crystals obtain series resonance. At these frequencies the crystal has a resistive impedance which is in the order of two to four ohms, and the line is no longer terminated in a matched resistance. The crystal resistance in shunt with the disk resistor reduces the resistance of the termination to a value near that of the crystal at resonance, and a serious mismatch occurs. This characteristic tends to limit the frequency range over which a mount is operable.

It is an object of the present invention to provide an improved crystal mount which has a broad frequency band of operation.

Another object of this invention is to provide a coaxial crystal mount which terminates the line in its characteristic impedance over a broad range of frequencies.

It is a further object of the instant invention to provide a crystal detector arrangement which has a constant sensitivity over a broad band of microwave frequencies.

Other objects of the invention will be better understood from the detailed description given in conjunction with the following drawings.

Referring to the drawings:

Figure 1 is a sectional view of one embodiment of the apparatus incorporating the present invention;

Figure 2 is a sectional view of the apparatus of Figure 1 taken along the line 2—2;

Figure 3 is a sectional view of another embodiment of the apparatus incorporating the present invention;

Figure 4 is an enlarged partial section view taken along the line 4—4 of Figure 3;

Figure 5 is a sectional view taken along the line 5—5 of Figure 4;

Figure 6 is a schematic drawing of an equivalent circuit for the present invention;

Figure 7 is a plot of sensitivity vs. frequency for a crystal detector constructed in accordance with Figure 3;

Figure 8 is a plot of voltage standing wave ratio (VSWR) vs. frequency of a crystal detector constructed in accordance with Figure 3.

Generally, the embodiments to be presently described provide means whereby resistance is added in series with the crystal to provide a matched impedance at the frequencies where the crystal obtains series resonance and otherwise cause serious mismatch to occur.

The apparatus illustrated in Figure 1 consists of a short section of a coaxial transmission line formed of the outer and inner conductors 11 and 12. The outer conductor 11 is in the form of a metal tube having an end portion 13 of reduced diameter, which is threaded or otherwise formed to facilitate making connection with an associated coaxial system. The change between the two diameters, as indicated at 14, provides a seat for the insulating spacer 15. The inner conductor 12 likewise has an end portion 17 of reduced diameter. It is concentric with portion 13 and is also adapted for connection to the associated coaxial system. The inner conductor likewise has a change in diameter indicated at 18, which compensates for the discontinuity introduced by the change of diameter of the outer conductor, and which likewise forms a seat for the spacer 15.

The major length of the inner conductor 12 is of composite construction, and includes a resistive component made of lossy material. Thus, this part of the inner conductor consists of a thin walled cylindrical metal tube 19, which is concentric with respect to a central metal rod 21. Both the metal tube and the rod make direct electrical connection with the end portion 17. The annular space 22 between the tube and the rod is filled with a suitable lossy material which can be of the type commonly used in lossy lines. For example, it can be made by dispersing fine particles of metallic substances in a self-setting synthetic resin. The loss introduced by the lossy material is proportional to the frequency. The length of lossy material is chosen such that at the frequency where the crystal becomes resonant the attenuation introduced prevents any reflected wave from entering the system and the series resistance introduced has the desired effective value. At the frequency where the length of the lossy portion is an odd multiple of quarter wave lengths the impedance must be such that the reflection does not appreciably affect the signal to the crystal.

The other end of the outer conductor 11 contains the crystal diode cartridge 23. This cartridge can be of the silicon crystal type, such as a cartridge known by manufacturer's specifications as No. 1N26. The metal shell which extends over the terminal prong in commercial crystals is machined to expose the prong 24. The one terminal prong 24 is then interfitted to make direct electrical contact with rod 21.

The metal shell of the cartridge 23 is fitted within the insulating portion 27, which in turn is carried by the metal bushing 28. This insulating portion can be made of any suitable low loss dielectric such as plastic adhesive tape of the "Scotch" type.

Adjacent to but spaced from the inner face of the bushing or plug 28 there is an annular terminating resistor disk 29. This disk can be made of suitable insulating material with its one surface 30 coated with resistive material. The metal snap-in ring 31 holds the annular disk 29 seated against the shoulder 32 and makes direct electrical contact with the resistive material and the outer conductor 11.

The thin walled tube 19 extends through the disk 29 and makes direct electrical contact with the inner margin of the resistive surface 30.

A metal closure plug 33 is mounted in the end of the conductor 11 by suitable means such as the threaded engagement 34. Its inner end engages the bushing 28 and serves to hold the assembly comprising the disk 29 and ring 31 clamped together. A coiled spring 35 is interposed between the closure plug and the end wall of the cartridge

shell, and serves to urge the cartridge against the rod 21, with its prong 24 seated within the rod as illustrated. The plug includes insulating material 36 that serves to mount the conductor rod 37. The inner end of this rod connects with the metal shell of the crystal cartridge and the outer end forms a connecting terminal.

A conventional external indicating or measuring circuit 38 is employed to indicate the rectified current flow through the crystal. As schematically illustrated the circuit consists of a D.-C. measuring or indicating meter 39 connected to the outer conductor 11 and to rod 37 by conductors 41 and 42 respectively.

In Figures 3, 4 and 5, I have shown another embodiment of my invention. I have replaced the annular lossy material 22 which introduces series resistance by an inner disk resistor. The apparatus, as illustrated, consists of an outer conductor 11*a* and an inner conductor 12*a*. The outer conductor 11*a* has a reduced diameter 51 at one end to accommodate the sleeve 52, which is locked onto the outer conductor by means of the snap ring 53. Finger contacts 54 are adapted to engage the outer conductor of the associated coaxial system. The portion 56 of the inner conductor is reduced in diameter to engage the inner conductor of the associated coaxial system. The finger contacts 54 are held against the dielectric spacer 15*a* by means of lip 57. The inner conductor 12*a* is adapted to inter-fit the dielectric spacer 15*a* and has its other end fixed to the disk resistors 29*a* and 58. The disks 29*a* and 58, made of suitable insulating material, have one surface coated with resistive material 30*a* and 59.

The inner conductor 12*a* is drilled or bored to form the cylindrical portion 61. The cylindrical portion 61 is machined to form shoulders 62 and 63 and the terminal portion of the cylinder is slotted to form a plurality of prongs 66 and 67.

The disk 29*a* coated with resistance material 30*a* is placed over the cylindrical portion and seated against the shoulder 62. The prongs 66 are bent over, to make electrical contact with the inner periphery of the resistive material 30*a* and hold the disk 29*a*. The inner disk 58 is placed inside the cylindrical portion, seating against the shoulder 63, and the prongs 67 are folded over to make electrical contact with the outer periphery of the resistive material 59. The assembly is then placed within the outer conductor 11*a*, thereby engaging the inner conductor in the dielectric spacer 15*a*. The disk 29*a* seats against the shoulder 68. The bushing 69 makes electrical contact with the outer periphery of the resistive material 30*a* and is held in contact by the snap-in ring 71.

The crystal cartridge 23*a* is placed within the bushing 69 and insulated therefrom by insulation 27*a*. The spring 35*a* urges the crystal prong 24*a* into engagement with the inner periphery of the resistive material 59. This electrically connects the crystal prong to the inner conductor 12*a* and places the resistances of the disk resistor 58 in series between the inner conductor 12*a* and the crystal prong. The cap 72 accommodates the connector 33*a* with its insulated inner rod 37*a*.

A conventional external indicating circuit 38 is employed to indicate the rectified current flow from the crystal. As schematically illustrated, the circuit consists of a D.-C. measuring or indicating meter 39 connected to the outer conductor 11*a* and to the rod 37*a* by conductors 41 and 42 respectively.

In Figure 6 I have shown an equivalent circuit of the device of Figures 1 and 3. The inner conductor of the coaxial system is represented by conductor 42, while conductor 41 represents the outer conductors 11 and 11*a*. Resistance 43 represents the terminating disk resistors 29 and 29*a*. The resistance added by the lossy material within the annular space of the inner conductor or added by the inner disk resistor 58 is represented by the series resistance 44. The crystal detector unit or rectifier is indicated at 46. The capacity between the outer metal shell of the crystal, and the outer conductor, is shown at 47. This capacity is set up by the capacitive relationship of the crystal cartridge and the bushing 28 or 69. The measuring meter is represented at 39.

Assuming that a microwave input is applied to the conductors 41 and 42, the line is terminated in its characteristic impedance by the disk resistance 43, which in a typical instance may have a value of between 30 and 100 ohms, depending upon the characteristics of the line. In series with the crystal detector 46 there is the resistance 44 presented by the inner disk resistor 58 or the lossy material. This resistance may be in the order of 30 to 100 ohms. At the resonant frequencies, the crystal impedance is reduced to a few ohms, but since it is in series with the resistance 44, the impedance seen by the coaxial system is slightly less than that of series resistance 44. At all other frequencies the line sees its matching impedance 43, since the crystal has a very high impedance.

In one particular instance a crystal mount was constructed as shown in Figure 3 and dimensioned as follows: The outer conductor had an inside diameter of 0.430 inch. The portion 56 of the inner conductor was 0.066 inch in diameter and extended a length of 0.225 inch. The portion which inter-fitted the dielectric spacer 15*a* was 0.493 inch long and had a diameter of 0.117 inch. The remaining portion had a diameter of 0.188 inch. The inner resistive disk had an outside diameter of 0.153 inch and an inside diameter of 0.047 inch giving a total resistance from inner periphery to outer periphery of 65 ohms. The outer resistive disk had an outside diameter of 0.458 inch and inner diameter of 0.170 inch, giving a resistance from inner periphery to outer periphery of 65 ohms. The crystal used was one commonly known in the art by manufacturer's specification No. 1N26.

A determination of the voltage standing wave ratio (VSWR) versus frequency was obtained for the mount described above over the frequency range of 1 to 12 kilomegacycles. This is plotted in Figure 8. It is seen that the VSWR in the region between 6 kmc. and 11 kmc. is excellent. Although in the other regions of the frequency spectrum it is relatively high, it is considered acceptable in a production device in view of the excellent sensitivity obtained. A curve of relative sensitivity over the same band of frequencies is shown in Figure 7. It can be seen that the sensitivity varies only a few db over this wide band of frequencies.

I claim:

1. In coaxial line apparatus of the type used as a termination and detector mount, an outer conductor, an inner coaxial conductor adapted at one end to be connected to an associated coaxial line and terminating in a conductive cylinder at its other end, a disk resistor connected between the terminal end of said cylinder and said outer conductor and providing a line termination, a second disk resistor disposed at the terminal end of said cylinder and having its outer periphery in contact therewith, a crystal detector cartridge having its one terminal conductively connected to the inner periphery of said second disk resistor, thereby effectively connecting the disk resistor in series with the inner conductor and the said one terminal of the crystal detector cartridge, means for placing the other terminal of the cartridge in capacitive relationship with the outer conductor, and means for connecting the crystal to an external measuring circuit.

2. Apparatus as in claim 1 wherein said disk resistors lie in a common plane substantially perpendicular to the axis of the apparatus.

3. Apparatus as in claim 2 wherein the means for placing the other terminal of the cartridge in capacitive relationship with the outer conductor comprises a bushing making electrical contact with the said outer conductor and insulated from the cartridge by insulation disposed between the crystal cartridge and the said bushing.

4. In coaxial line apparatus of the type used as a

termination and detector mount, an outer conductor, a conductive tube having its axis coincident with that of the outer conductor, a rod conductor extending concentric with the tube, a disk resistor connected between one end of said conductive tube and said outer conductor and providing a line termination, lossy material disposed between the said tube and the said rod, a crystal detector cartridge, having its one terminal conductively connected to the rod adjacent the disk resistor, means for placing the other terminal of the cartridge in capacitative relationship with the outer conductor, and means for connecting the crystal to an external measuring circuit.

5. In coaxial line apparatus of the type used as a termination and detector mount, an outer conductor, a metal tube having its axis coincident with that of the outer conductor, a metal rod having its axis coincident with that of the above mentioned element, lossy material disposed between the tube and rod, the aforesaid parts forming a coaxial line section, a disk resistor forming a termination for said line, a crystal detector cartridge having a terminal prong connected to the rod adjacent the disk whereby the lossy material is placed in series with

the crystal, insulation providing a high impedance path to direct current and a low impedance to high frequency current between the crystal and the outer conductor, and means for connecting the detector output to an external measuring circuit.

6. Apparatus as in claim 4 in which the lossy material disposed between the conductive cylinder and the rod has a length which is sufficient to prevent any reflected wave at the frequency where the crystal becomes resonant, and where the impedance offered by the lossy portion when its length is an odd multiple of quarter wave lengths does not appreciably affect the incoming signal.

References Cited in the file of this patent

UNITED STATES PATENTS

2,227,906	Kellogg	Jan. 7, 1941
2,412,393	Ghosh	Dec. 10, 1946
2,498,335	Hunt	Feb. 21, 1950
2,557,122	Leiphart	June 19, 1951
2,655,635	Woodward	Oct. 13, 1953