Dec. 19, 1939. J. SCHULTZ 2,184,228

AUTOMATIC DRAFT REGULATOR

Filed May 13, 1939 3 Sheets-Sheet 1

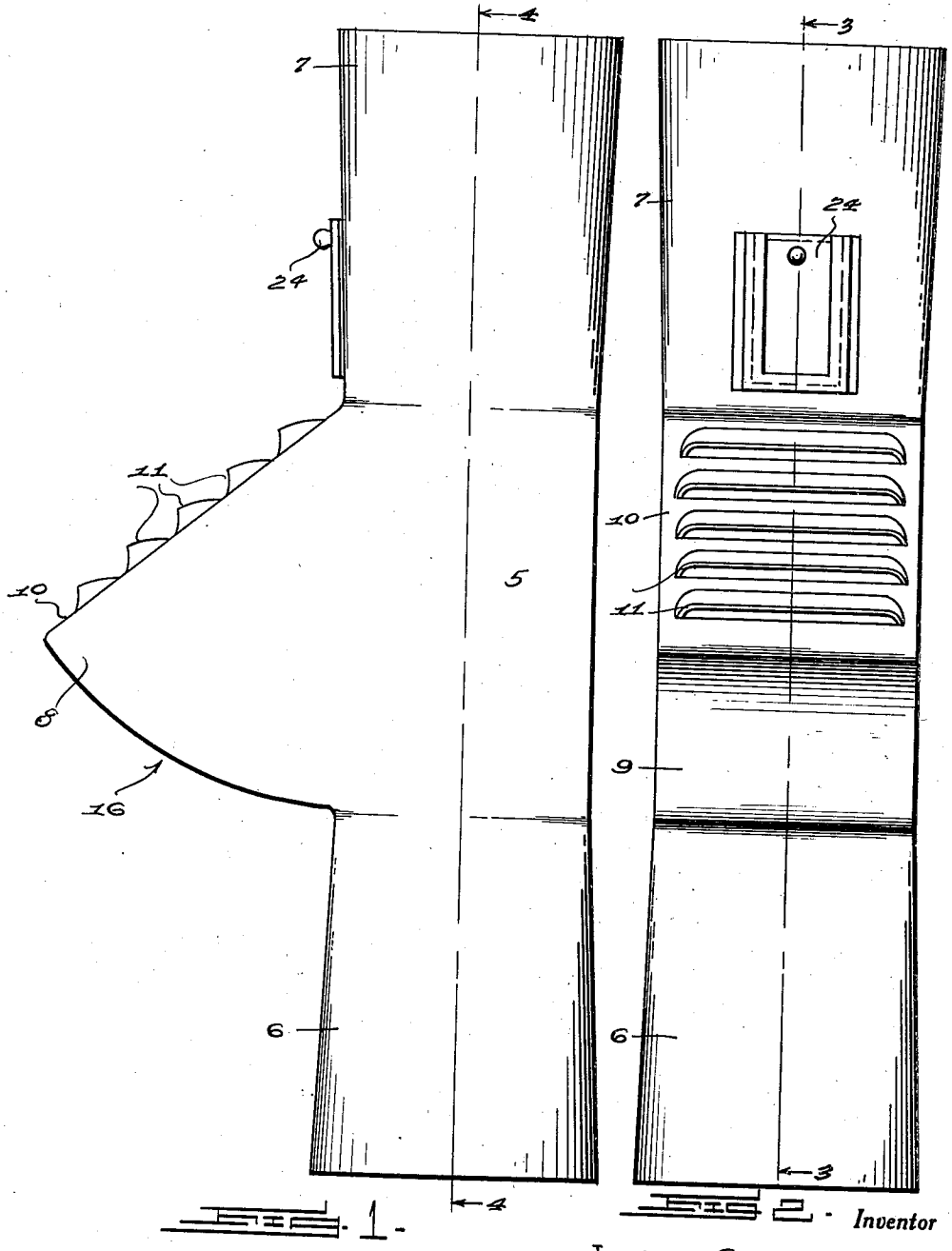

FIG. 1. FIG. 2.

Inventor

JOHN SCHULTZ,

By Clarence A. O'Brien and Hyman Berman

Attorneys

Dec. 19, 1939. J. SCHULTZ 2,184,228

AUTOMATIC DRAFT REGULATOR

Filed May 13, 1939 3 Sheets-Sheet 2

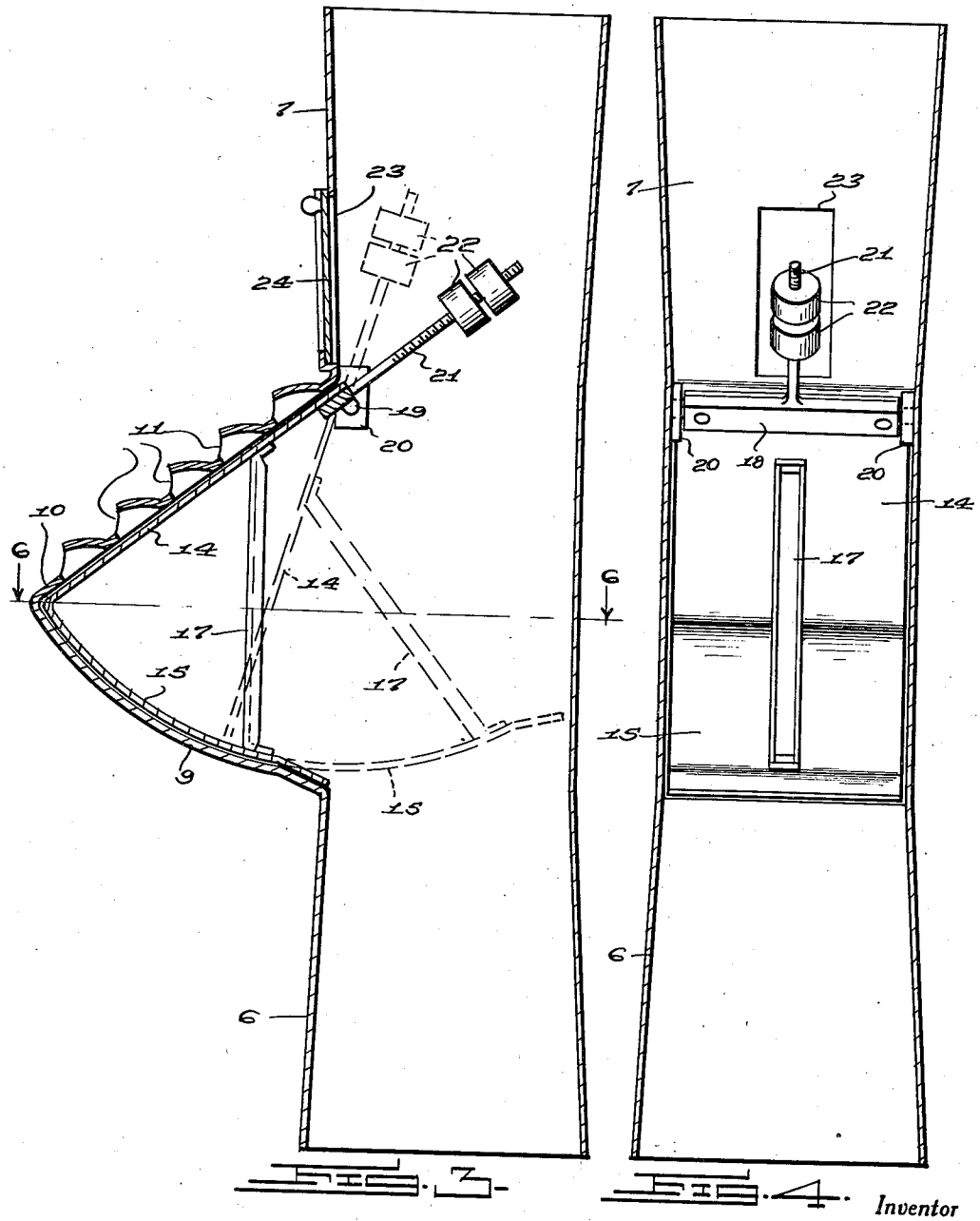

FIG. 3. FIG. 4.

Inventor

JOHN SCHULTZ,

By Clarence A. O'Brien and Hyman Berman

Attorneys

Dec. 19, 1939. J. SCHULTZ 2,184,228

AUTOMATIC DRAFT REGULATOR

Filed May 13, 1939 3 Sheets-Sheet 3

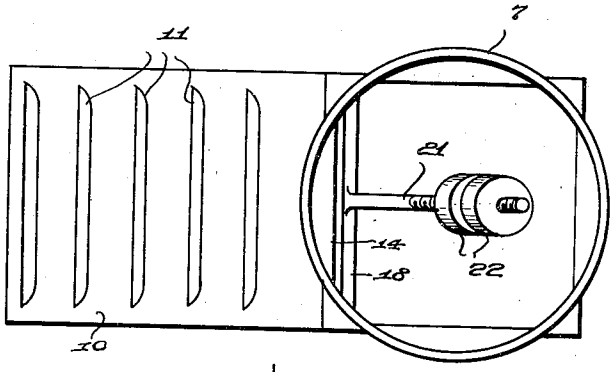

FIG. 5.

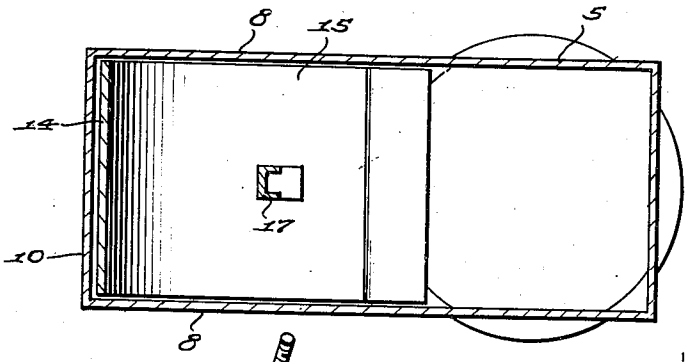

FIG. 6.

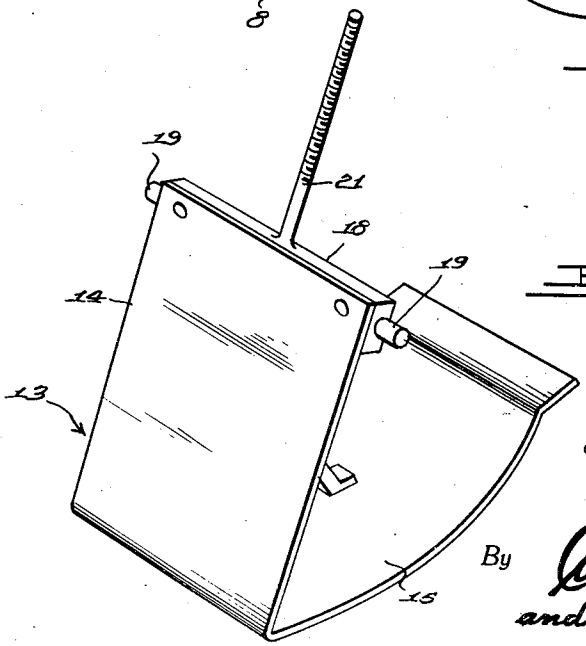

FIG. 7.

Inventor

JOHN SCHULTZ,

By Clarence O'Brien and Hyman Berman

Attorneys

Patented Dec. 19, 1939 2,184,228

UNITED STATES PATENT OFFICE

2,184,228

AUTOMATIC DRAFT REGULATOR

John Schultz, New Britain, Conn.

Application May 13, 1939, Serial No. 273,538

1 Claim. (Cl. 236—45)

This invention relates to regulators for controlling the draft of fireplaces, stoves, burners and the like, and the object of the invention is to provide a regulator of this character which may be readily inserted in the flue between the chimney and the fireplace, stove, furnace and the like and which will operate automatically for maintaining substantially a uniform draft under any and all conditions.

The invention together with its objects and advantages will be best understood from a study of the following description taken in connection with the accompanying drawings wherein—

Figure 1 is a side elevational view of the draft regulator.

Figure 2 is a front elevational view thereof.

Figure 3 is a longitudinal sectional view taken substantially on the line 3—3 of Figure 2.

Figure 4 is a longitudinal sectional view taken substantially on the line 4—4 of Figure 1.

Figure 5 is an end elevational view of the regulator at the outlet end of the latter.

Figure 6 is a transverse sectional view taken substantially on the line 6—6 of Figure 3, and

Figure 7 is a perspective view of a valve assembly.

Referring more in detail to the drawings it will be seen that in the preferred embodiment thereof the draft regulator comprises a tubular member 5 adapted to be inserted, horizontally or vertically, as the occasion may require, in the flue pipe intermediate the fireplace, furnace, stove or the like and the chimney, in a manner to have the smoke and products of combustion from the fireplace, furnace, or the like pass therethrough, entering the tube 5 of the regulator at the inlet end 6 thereof and passing from the tube 5 through the outlet 7 hereof.

Inlets 6 and 7 are flared as shown while the intermediate portion of the tube 5 is substantially rectangular in cross-section and at one side of the flue, the side walls 4 at opposite sides of the intermediate portion of the tube have integral substantially segmental-shaped wall extensions 8 which at the lower edges thereof are connected by an arcuate wall 9 and at the inclined straight edges thereof are connected by a relatively flat wall 10 equipped with a series of louvres or air inlets 11.

Pivotally mounted within the intermediate portion of the tube 5 is a valve 12 which in the present instance is cut from a single length of metal or other suitable material cut shaped and dimensioned to provide a relatively flat valve plate 14 for the louvres or air inlets 11 and an arcuate integral valve plate 15 that serves to control the passage of smoke and other products of combustion through the tube 5 of the regulator, the valve assembly 13 being accommodated within the formation 16 of the tube 5 and which formation 16 is formed by the wall extensions 8, wall 9, and wall 10.

The valve plates 14 and 15 are braced relative to one another through the medium of a brace bar 17.

Secured to one side of the valve plate 14 at the free end thereof is a transverse cleat 18 that at the ends thereof is equipped with pintles 19 journaled in bearings 20 provided therefor in the tube 5 at the inner or upper end of the inclined wall 10 as best shown in Figures 3 and 4.

The cleat 18 has extending therefrom a shank 21 that is threaded to accommodate to any desired and suitable number, weights 22. In the present instance two weights 22 are illustrated.

Also in accordance with the present invention the tube 5 at the outlet end 7 thereof is provided on the side of the tube from which the formation 16 extends, with an opening 23 through which access may be had to the weights 22 for positioning the same at the desired position of adjustment on the shank 21. For the opening 23 there is provided a slide closure or door 24.

In actual practice the weights 22 are positioned at the desired position of adjustment on the shank 21 dependent upon the desired regulation of the draft.

Thus it will be seen that as the chimney draft at the outlet end 7 of the regulator increases the resultant suction in the tube 5 will act on the valve assembly 13 to cause the same to swing against the action of weights 22, positioning the valve member 15 across the bore of the tube 5 at the inner end of the inlet 6 to an extent dependent upon the amount of chimney draft thus insuring a constant furnace or fire draft at the inlet 6 of the tube.

Obviously the air ports or louvres 11 will permit bleeding of air from the tube 5 so that such air will not prevent return movement of the valve assembly 13, as the suction, due to reduced chimney draft, decreases.

When there is no chimney draft the valve assembly will be in the full line position shown in Figure 3, closing the openings 11 and leaving the passage for smoke or other products of combustion through the tube 6 free.

It is thought that a clear understanding of the construction utility and advantages of a draft regulator embodying the features of the present

invention will be had without a more detailed description.

Having thus described the invention what is claimed as new is

A draft regulator of the character described comprising a tubular member having a substantially rectangular intermediate portion and flared substantially cylindrical inlet and outlet end portions, said tube having opposite side walls thereof at the squared intermediate portion of said tube extended laterally and having straight and curved edges, a wall connecting said wall extensions at the straight edges thereof, an arcuate wall connecting said wall extensions at the arcuate edges of said wall extensions, said first-named connecting wall being provided with a series of louvres, a substantially L-shaped valve member pivotally mounted in said tube and including a relatively flat valve part for controlling said louvres and an arcuate valve part for movement across the interior of said tube at the inner end of the inlet end of said tube, a cross bar connected to the free end of the flat valve part and having pintles at its ends, bearing members in the tubular member for receiving the pintles, said bearing members being located adjacent the junction of the straight edges of the lateral extensions of the side walls with the adjacent portion of the tubular member, a threaded shank connected with the bar and extending into the tubular member and weights threaded on said shank for normally holding the valve in inoperative position within the lateral extension of the tubular.

JOHN SCHULTZ.