April 30, 1929. G. D. RUETZ 1,711,396

DRINK MIXER

Filed Feb. 23, 1928

Fig. 1.

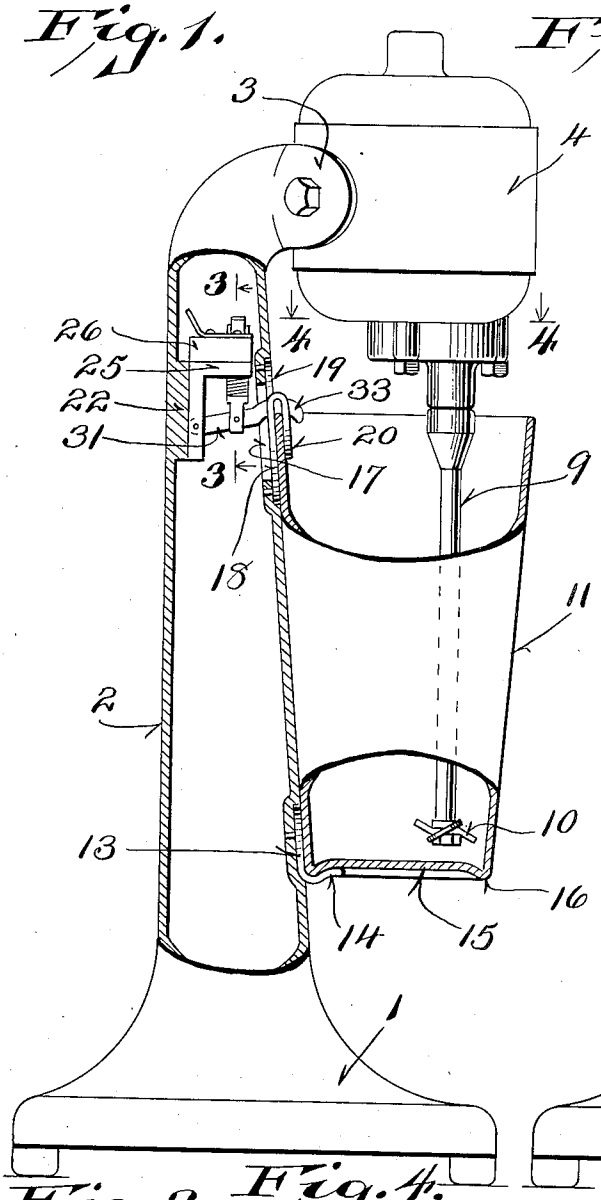

Fig. 2.

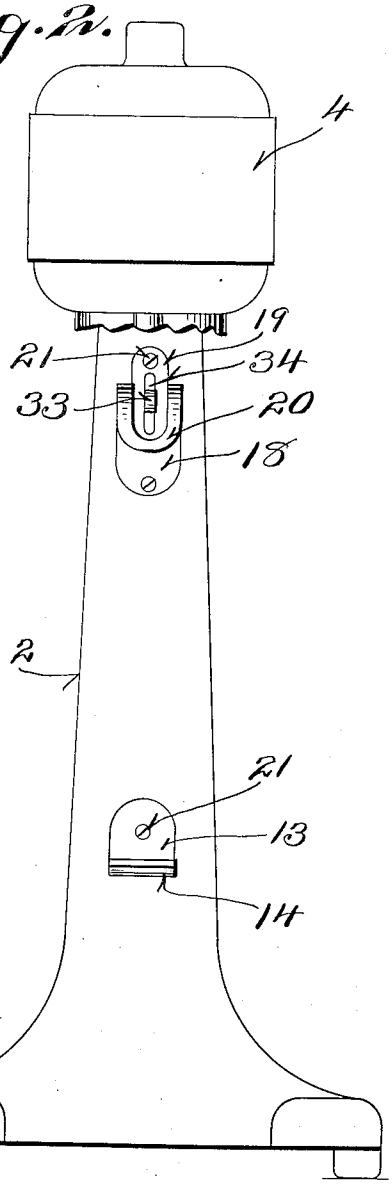

Fig. 3.

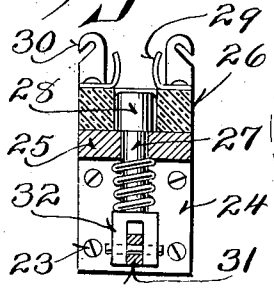

Fig. 4.

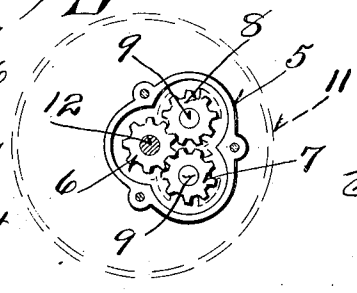

Inventor.
G. Ruetz
By
Attorneys.

Patented Apr. 30, 1929. 1,711,396

UNITED STATES PATENT OFFICE.

GEORGE D. RUETZ, OF RACINE, WISCONSIN, ASSIGNOR OF ONE-THIRD TO JOHN J. HEINISCH, OF RACINE, WISCONSIN.

DRINK MIXER.

Application filed February 23, 1928. Serial No. 256,315.

This invention relates to drink mixers.

In drink mixers as heretofore constructed, it is the usual practice to provide a switch mechanism which is moved by the weight of the container and the contents thereof to close the switch. This, however, has resulted in an uncertain action of the switch due to the fact that the weight of the container contents varies. In addition to this, where switch mechanism supports the weight of the container, it must necessarily be made heavy to resist jars and suddenly applied stresses, and these stresses and jars are necessarily transmitted to the switch mechanism and soon causes failure of the mechanism.

This invention is designed to overcome the defects noted above, and objects of this invention are to provide a novel form of retainer which is distinct from the switch so that the switch is not subjected to heavy or violent stresses, and in which the switch is distinct and separate from the retainer so that it plays no part whatsoever in holding the container in place, but merely operates to control the motor circuit.

Further objects are to provide a novel form of switch mechanism in which the switch operating portion is protected and cannot be inadvertently damaged, and in which the operation of the switch is wholly automatic.

Further, it is well known that the mixers are usually provided with an enamelled or otherwise finished base or standard, which carries the motor and projects upwardly from the base. This standard is frequently chipped or marred by the careless manipulation of the container, as the upper end of the container frequently strikes against the standard in placing the container in mixing position.

This invention overcomes the defects noted immediately above and further objects are to provide a removable face plate or retainer plate which prevents marring of the standard and which is so arranged that it normally covers an opening through which access to the switch may be had.

A further object of this invention is to provide a rigid retainer for the vessel so that there is no portion of the retainer which is likely to get out of order.

Further objects are to provide a novel form of drink mixer which is extremely rapid in operation and which does not allow the drink to excessively swirl, although the mixing is accomplished in a fraction of the time ordinarily required for mixing drinks by devices of this general type.

Further objects are to provide a drink mixer which is so constructed that a plurality of beaters or mixers are employed which cooperate to prevent swirling, as stated above, and which also insure a complete, thorough, and intimate mixing of all portions of the drink.

Further objects are to provide a novel form of switch for the drink mixer which is so constructed that it may be bodily removed as a unit through an aperture normally covered by the upper retainer, and which does not depend upon delicate spring fingers or other fragile means for its operation, but which instead is of the plunger type and is sturdy and reliable in operation.

An embodiment of the invention is shown in the accompanying drawings in which:

Figure 1 is a side elevation of the drink mixer with parts broken away and in section;

Figure 2 is a front view of the drink mixer with a portion thereof broken away to show the face of the standard;

Figure 3 is a sectional view on the line 3—3 of Figure 1;

Figure 4 is a sectional view on the line 4—4 of Figure 1.

Referring to the drawings, it will be seen that the device comprises a base 1 from which rises an integral standard 2. The base and standard are ordinarily formed of metal and are enamelled or otherwise suitably finished. The upper end of the standard is provided with an overhanging portion provided with wings 3 which are bolted to an electric motor 4. The motor 4 is provided with a casing 5 which, as may be seen from Figure 4, houses three pinions indicated by the reference characters 6, 7, and 8. The pinions 7 and 8 are rigidly connected to a pair of mixer or beater shafts 9, and these shafts extend downwardly and are adapted to enter the container, as shown in Figure 1. It is to be noted that the arrangement is such that the shafts and beaters 10 are offset with reference to the center of the container 11 to prevent excessive swirling of the drink during mixing.

The third pinion 6 is rigidly carried by

the shaft 12 of the motor (see Figure 4) and meshes with each of the pinions 7 and 8. The pinions 7 and 8 are spaced slightly apart so that they do not touch, as is obvious from an inspection of Figure 4, and it will be seen that the pinions 7 and 8 rotate in the same direction. This causes the juxtaposed portions of the beaters to travel in opposite directions and to thus insure a very quick and thorough mixing of the drink. Obviously, the direction of rotation can be reversed and the double action of the beater still secured. However, the arrangement is such that the swirling is very materially reduced, from actual trials with the device, although the drink is mixed in only a fraction of the time ordinarily required.

It is to be noted also from Figure 1 that the standard is provided with two recessed portions. The lower recessed portion carries the plate 13 of the bottom support, and it is to be further noted that this bottom support is provided with a curved upwardly and outwardly projecting portion 14 which fits below the base 15 of the container 11 and which receives the bead 16 at the edge of the base and prevents outward slipping of the container.

Further, it is to be noted that the upper recessed portion is provided with an aperture 17 which is closed by the plate 18 of the upper retainer. This plate 18 is provided with an upper tongue or extension 19 which is cut or struck from an outwardly and downwardly turned lip 20, as shown in Figures 1 and 2. These plates may be held in place by means of screws 21, so that they are readily renewable as required.

The upper tongue 20 provides a space between itself and the plate 18 for the reception of the upper or marginal portion of the container.

In positioning the container, it is merely slipped in between the lip 20 and the plate 18 and moved upwardly so that the beaded bottom edge 16 may slip over the member 14. Thereafter, the container is lowered so that its beaded edge is carried by the portion 14. The container is thus securely held in place against dislodgment, but may be instantly removed by slightly lifting it and thereafter rocking the bottom outwardly and lowering it.

It is to be noted that the standard is protected at the points where the container normally strikes it during positioning by means of the plates 13 and 18, as it is usually the case that the operator hits the upper edge of the container against the standard in positioning the container.

It is to be noted also that no portion of the switch mechanism is operated from either retainer but that the switch is wholly distinct and separate from the apparatus.

The switch is carried by a boss 22 projecting inwardly from the back of the standard 2, as shown in Figure 1. This boss receives the screws 23 which pass through the vertical portion 24 or an angle-like member. The horizontal portion 25 of such member carries an insulating block 26. This horizontal portion is apertured and slidably receives the insulating plunger 27 of the movable portion of the switch. The upper end of this plunger carries a metal movable contact member 28 which is larger in diameter than the plunger 27 and which in its lowest position rests upon the member 25, as shown in Figure 3. This movable contact is carried within an aperture formed in the insulating block 26 and when moved upwardly by means hereinafter described, is adapted to connect the contact fingers 29 (see Figure 3). These contact fingers are provided with conductor receiving lugs 30 to which conductors may be readily attached, as by soldering, for instance.

The plunger 27 and consequently the switch, is operated by means of a small lever 31 (see Figures 1 and 3). This lever 31 passes between the forked lower end 32 of the plunger 27 and is pinned thereto or fastened in any suitable manner. It extends outwardly and is provided with an outer hook like end 33 which passes through a slot 34 formed in the plates 18 and 19. The projecting portion 33 is guarded or protected by the upper retainer. It is adapted to be engaged by the upper end of the container when the container is slipped into position, as shown in Figure 1. When so engaged, the lever 33 is moved upwardly and thus causes the switch to close the motor circuit, the conductors of the motor circuit being omitted for the sake of clearness.

It is thus apparent that a novel form of drink mixer has been provided in which the switch is not actuated by the weight of the container, but is actuated wholly independent of any of the retaining parts of the device.

Further, it is to be noted that the switch and its associated parts do not retain the container in position but operate solely in their capacity as switching means.

Further, it is to be noted that in the event that it is necessary to repair the switch before the device is worn out, all that is necessary is to remove the upper retainer thereby exposing the aperture 17 and allowing the removal of the switch with the utmost ease. A new switch can be substituted and the device will then be in condition for immediate operation. With mixers as heretofore constructed it has been found that the majority of the trouble arises at the switch, which most quickly wears out.

The mixers have usually been sent back to the factory for repair, with consequent

delay. However, with this invention it is not necessary to return the mixer to the factory when a new switch is required, as the switch may be very readily removed and a new one substituted without any material delay.

It will be seen further that the device is of extremely simple and of rugged and substantial construction.

It is to be noted particularly that the arrangement of beaters or mixers is such that swirling is materially prevented so that there is no danger of causing the drink to flow over the sides or upper edge of the container during mixing.

As has been determined from actual tests with this device, it has been found that the mixing is more intimate and is very much more quickly produced than has heretofore been possible with the ordinary types of mixers in commercial use.

Although the invention has been described in considerable detail, such description is intended as illustrative rather than limiting as the invention may be variously embodied and as the scope of such invention is to be determined as claimed.

I claim:

1. A drink mixer comprising a base, a standard rising from the base, a plate attached to the standard and having one edge curved outwardly and upwardly to form a seat for a container, said standard having an opening above the plate and adjacent the upper end thereof, a second plate arranged over the opening and having a U shaped loop struck therefrom and curved outwardly and downwardly to form an engaging hoop to embrace the upper edge of the container, a motor carried by the standard, an agitator suspended from the motor and operated thereby and adapted to be received in a receptacle, and movable means projecting through the opening in the standard and through the plate over said opening and adapted to be engaged by the upper edge of the container for actuating a switch to control the motor.

2. In drink mixer, a supporting base, a standard rising therefrom, a supporting element attached to the standard above the base and extending upwardly and outwardly to form a seat for the container, an outwardly and downwardly projecting lip carried by the standard adjacent its upper end for embracing the upper edge of the container, spaced yieldable contact fingers mounted within the standard adjacent the upper end, a slidable plunger mounted for movement in the path of said fingers, and adapted to contact the same for closing a circuit, means normally maintaining the plunger out of contact with the fingers, a pivoted lever connected with one end of the plunger and projecting through an opening in the standard at a point adjacent the lip and adapted to be engaged by the upper edge of the container for moving the plunger into contact with the fingers.

3. A drink mixer comprising a base, a standard rising from the base, a container support carried by the standard adjacent the base, said standard having an opening adjacent its upper end, a plate normally closing the opening and provided with a slot, an outwardly and downwardly projecting lip carried by the plate for engaging the upper edge of a receptacle, an angular member supported within the standard adjacent said opening, spaced contact fingers carried by said angular member, a movable plunger extending through the horizontal portion of the angular member and adapted to contact with the fingers, means for normally maintaining the plunger out of engagement with the fingers, a pivoted lever connected with the plunger and having its outer end hooked shaped and extending through the opening in the standard and in the plate covering the opening to be engaged by the upper edge of a receptacle for moving the plunger into engagement with the contact fingers whereby to close a circuit.

In testimony that I claim the foregoing I have hereunto set my hand at Racine, in the county of Racine and State of Wisconsin.

GEORGE D. RUETZ.