May 14, 1929. C. P. EISENHAUER 1,713,219

PUMP

Filed July 28, 1926 4 Sheets-Sheet 1

FIG. 1

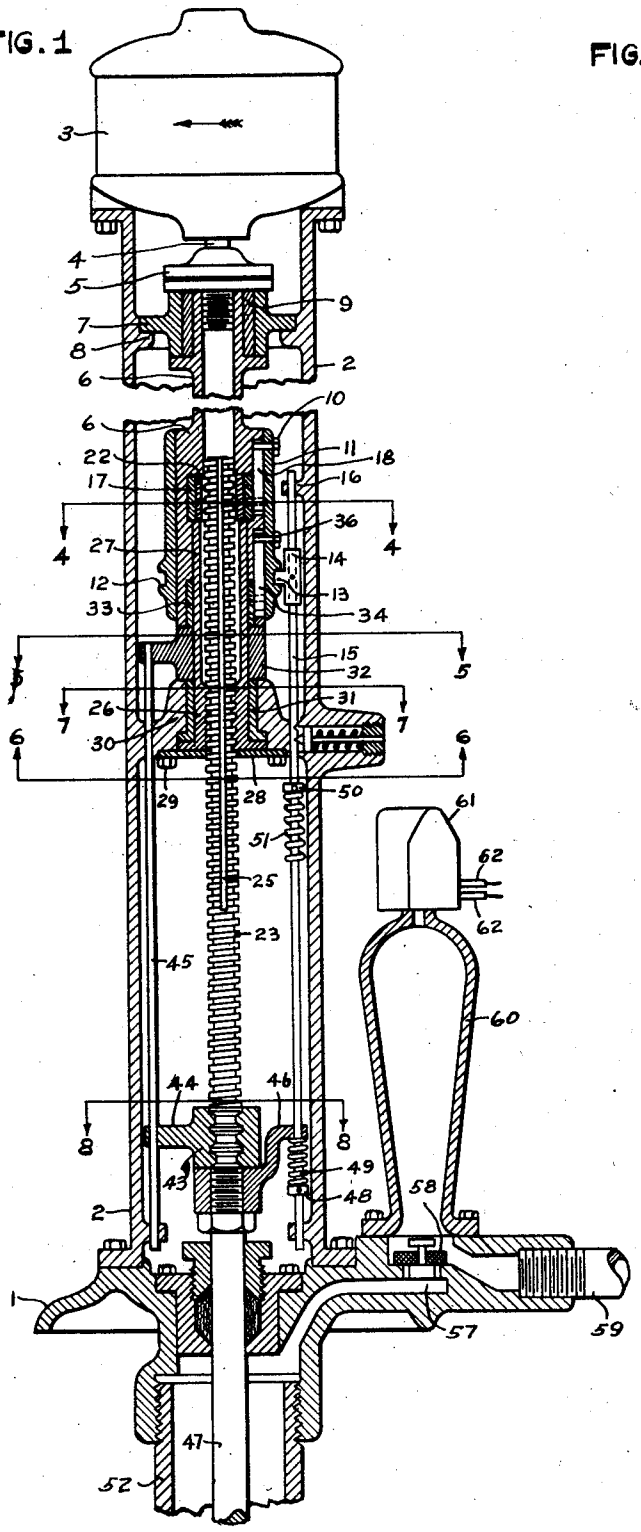


FIG. 2

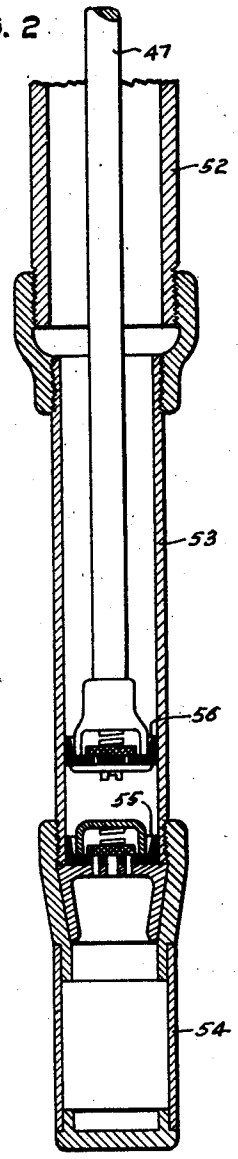


INVENTOR.
CHARLES P. EISENHAUER.
BY Toulmin & Toulmin,
ATTORNEYS.

May 14, 1929. C. P. EISENHAUER 1,713,219

PUMP

Filed July 28, 1926 4 Sheets-Sheet 2

FIG. 3

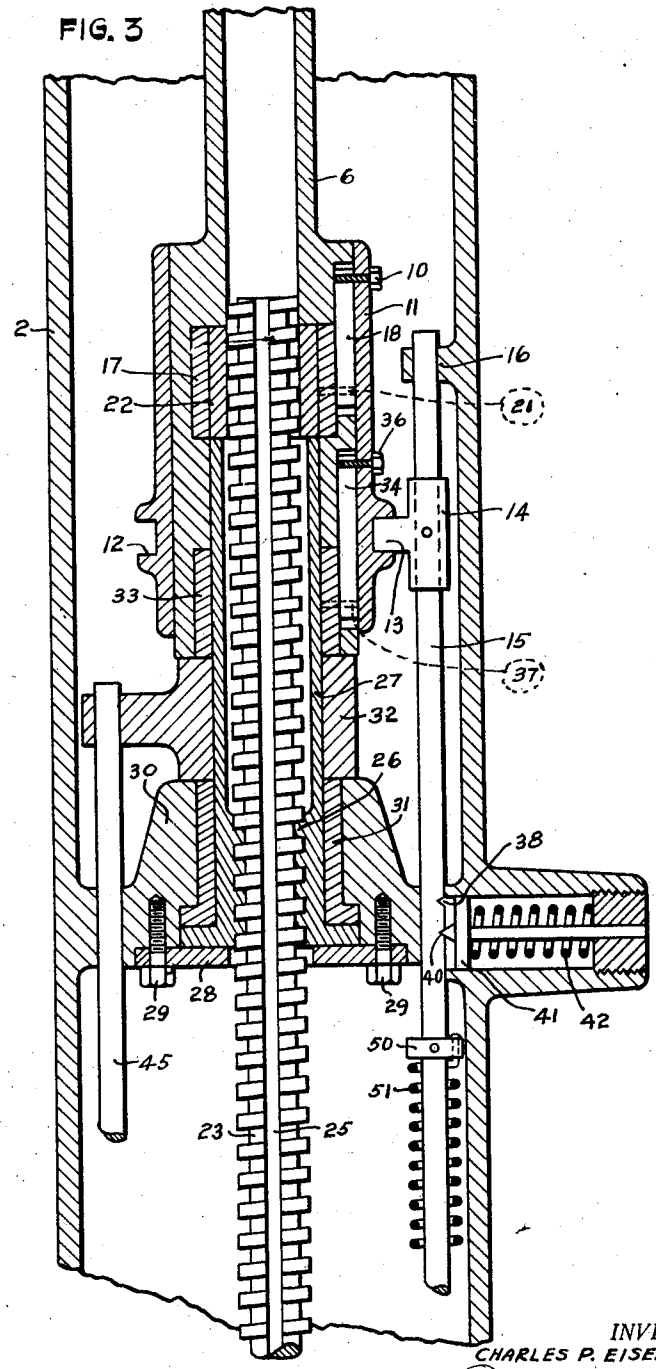


INVENTOR.
CHARLES P. EISENHAUER.
BY Goulmin & Goulmin
ATTORNEYS.

May 14, 1929. C. P. EISENHAUER 1,713,219

PUMP

Filed July 28, 1926 4 Sheets-Sheet 3

FIG. 4

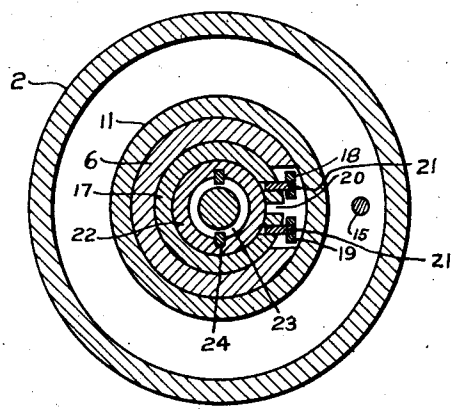


FIG. 7

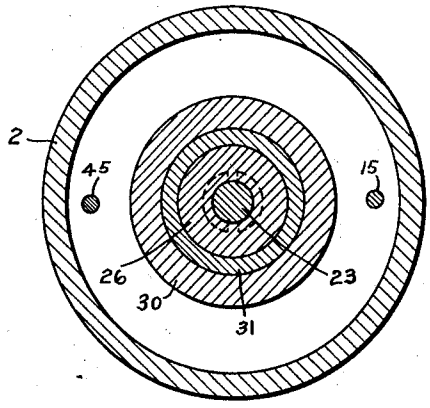


FIG. 5

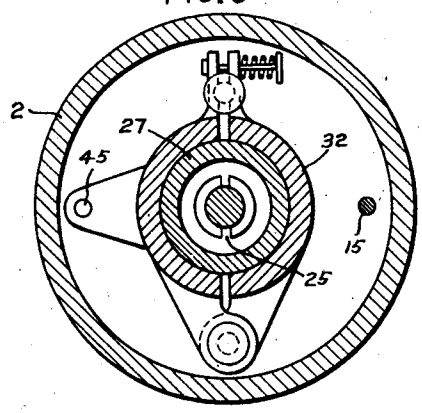


FIG. 8

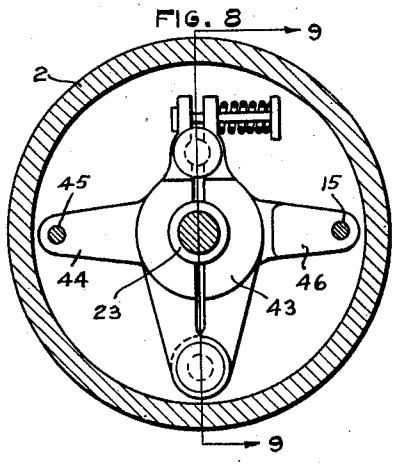


FIG. 6

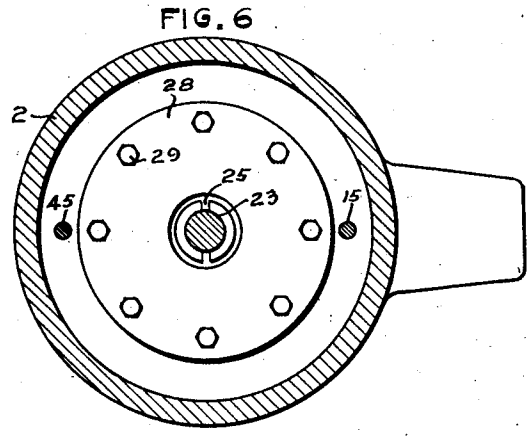


INVENTOR.
CHARLES P. EISENHAUER
BY Toulmin & Toulmin,
ATTORNEYS.

May 14, 1929. C. P. EISENHAUER 1,713,219

PUMP

Filed July 28, 1926 4 Sheets-Sheet 4

FIG. 10

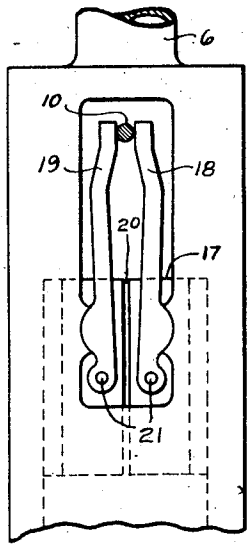


FIG. 11

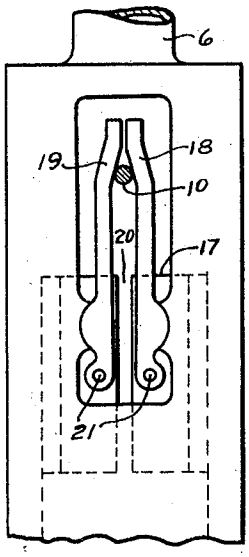


FIG. 12

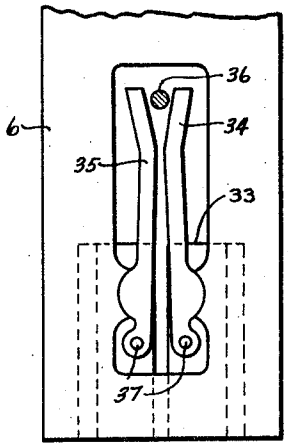


FIG. 14

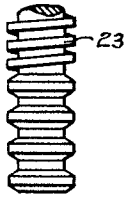


FIG. 9

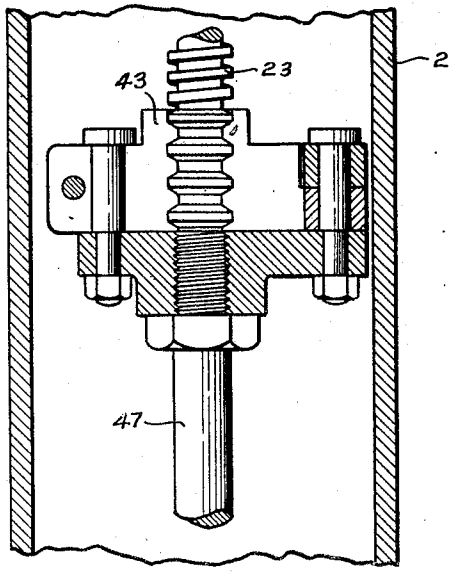


FIG. 13

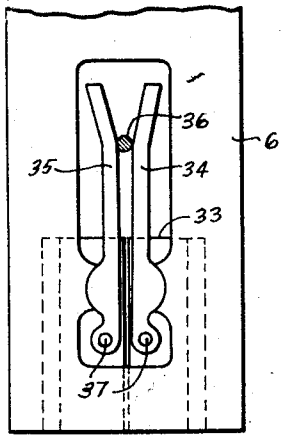


INVENTOR.
CHARLES P. EISENHAUER.
BY. Toulmin & Toulmin
ATTORNEYS.

Patented May 14, 1929. 1,713,219

# UNITED STATES PATENT OFFICE.

CHARLES P. EISENHAUER, OF DAYTON, OHIO, ASSIGNOR TO THE DURO COMPANY, OF DAYTON, OHIO, A CORPORATION OF OHIO.

## PUMP.

Application filed July 28, 1926. Serial No. 125,533.

My invention relates to pumps.

It is the object of my invention to provide a pump in which the source of motive power can continuously operate in a given direction producing reciprocation of the pump parts without the necessity of reducing gears, levers or other apparatus.

It is a further object to provide a pump which will take up the minimum of floor space, which can run at the speed of the motive power and which will be automatic in its operation.

Referring to the drawings:

Figure 1 is a section through the pump mechanism;

Figure 2 is an enlarged section at the lower end of the sucker rod and valves;

Figure 3 is an enlarged section through the clutch mechanism and shaft mechanism;

Figure 4 is a section on the line 4—4 of Figure 1;

Figure 5 is a section on the line 5—5 of Figure 1;

Figure 6 is a section on the line 6—6 of Figure 1;

Figure 7 is a section on the line 7—7 of Figure 1;

Figure 8 is a section on the line 8—8 of Figure 1;

Figure 9 is a section on the line 9—9 of Figure 8;

Figure 10 is a side elevation of the upper clutch sleeve and actuating arms with the actuating pin in section showing the parts in the down position of the rod;

Figure 11 is a similar view showing the parts in the upper position of the actuating rod;

Figure 12 is a similar view of the lower clutch sleeve showing the parts in the down position of the rod;

Figure 13 is a similar view showing the parts in the upper position of the rod;

Figure 14 is a detail view of the lower end of the screw.

Referring to the drawings in detail, 1 is a supporting platform housing having mounted thereon a vertical tubular actuating mechanism casing 2 on the top of which is mounted an electric motor 3.

The motor may turn in either direction, but, for the purpose of description in this case, we will assume the motor is turning in a clockwise direction. The armature shaft 4 of the motor has connected to it by a suitable coupling 5 a sleeve 6 which continuously rotates with it in a clockwise direction. A collar 7 supported on the shoulder 8 provides a suitable support for the sleeve. 9 indicates a bearing.

This sleeve 6 has connected to it by pins 10 a shifting sleeve 11 provided with jaws 12 in which the shifting jaw 13 is fitted. This jaw is carried on a sleeve 14 on a reciprocating shifting rod 15 guided in the eyes 16 of the casing 2.

The clutch operating sleeve 11 is adapted to reciprocate upon the sleeve 6 as well as rotate with it. Mounted in the sleeve 6 is a split collar 17 having arms 18 and 19 connected to the respective sides of the collar adjacent the split 20 therein, such arms being pivoted on the pins 21. The pin 10 is adapted to move between the upper ends of the arms to draw the arms together or expand them to open and close the split collar 17. This collar surrounds a solid or non-split sleeve 22 which is adapted to engage with the external surfaces of the threads of the screw 23 to which screw it is splined by the spline 24 in the groove 25.

Adjacent this screw is a nut and sleeve integrally formed, the nut portion being designated 26 and the sleeve being designated 27.

This nut rests on a plate 28 supported by bolts 29 on a collar 30 which is an integral part of the casing 2. It turns in a bearing 31 in this collar 30. Surrounding the sleeve 27 is the upper friction drag member 32 adapted to frictionally resist the rotation of the sleeve 27 and the nut 26 as the nut 26 is internally threaded to receive the screw 23. This sleeve extends upwardly to the bottom of the collar 22. On the sleeve is a second split clutch collar 33. This collar has a similar arrangement of arms designated 34 and 35 actuated by the pin 36 and supported on pins 37 on the collar.

The shifting rod 15 is provided with an upper notch 38 and lower notch 40 engaged by a spring pressed plunger 41 actuated by the spring 42 located within the casing 2.

At the bottom of the screw, a second lower friction drag 43 is provided having an arm 44 engaging with the stationary rod 45 which also holds the upper friction drag in position. A shifter member 46 is carried on the sucker rod 47 adapted to engage with the collar 48 through the spring 49 on the shifter rod. There is also provided on the shifter rod an-

other collar 50 and a spring 51. The screw is connected to the rod in such a manner that it is entirely independent of the rod in its rotation first in one direction and then in the other, but is so connected to the rod that the rod and screw reciprocate together. Thus the rotation of the screw first in one direction and then in the other in the arms 43 will not affect the sucker rod 47 but the movement of the screw up and down will move the rod.

The base casting 1 carries the tube 52. It carries at the bottom thereof a pump cylinder 53 and the strainer 54 together with the valves generally designated 55 and 56 of any desired character.

The base casting is provided with an exit passageway 57 through which fluid passes beneath the valve 58 to the outlet pipe 59. An air chamber 60 is provided with the usual pneumatic switch 61 having electrical connections 62 in circuit with the motor 3.

*Method of operation.*—The motor rotates continuously in a given direction, such as a clockwise direction at some desirable speed, such as 1750 revolutions per minute. As it rotates, it rotates the sleeve 6 and the clutch sleeve 11. If the parts are as in Figure 3 with the shifting rod 15 in its uppermost position the arms 19 and 18 are spread apart at the top and drawn together at the bottom clamping the split sleeve 17 on the sleeve 22 splined to the worm 23 thereby rotating the screw moving it downwardly.

At this time the upper friction drag 32 frictionally engages the sleeve 27 preventing it from rotating and preventing its associated nut 26 from rotating.

The clutch sleeve 33 is now open. The continued movement of the worm will operate through the shifter arm 46 and rod 15 to bring about a downward movement of the rod, positioning the plunger 41 in the notch 38 which will result in the relative shifting downward of the sleeve 11 on the rotating sleeve 6 releasing the upperclutch and closing the lower clutch or split sleeve 33 on the sleeve 27 causing the sleeve 27 and its nut 26 to rotate with the sleeve 6, and, in doing so, to reverse the direction of movement of the screw 23 working the screw upwardly. The lower drag 43 holds the screw from turning.

The rotation of the sleeve 6 and the sleeve 27 is, of course, affected through the clutch action of the split sleeve 33.

Thus, in my apparatus, the essentials consist of a continuously rotating motive power unit, driving a continuously rotating driving member with a driven member, which reciprocates and rotates in opposite directions, and an automatic means for joining the rotating means alternately to the reciprocating means to cause it to reciprocate in opposite directions.

It will be understood that I desire to comprehend within my invention such modifications as may be necessary to adapt it to varying conditions and uses.

Having thus fully described my invention, what I claim as new and desire to secure by Letters Patent, is:—

1. In combination, a power means rotating in a given direction, a reciprocating screw adapted to be reciprocated thereby in either direction without the direction of the rotating means changing, a clutch adapted to engage said screw at one point to cause it to travel with the power means and in one direction, a nut on said screw, a second clutch adapted to cause said nut to travel with the power means to cause the screw to travel in the other direction, and means to cause said clutches to alternately engage when the screw gets to the end of its stroke and a non-rotating reciprocating rod reciprocating with the screw but not rotating with it.

2. In combination, a power means rotating in a given direction, a reciprocating screw adapted to be reciprocated thereby in either direction without the direction of the rotating means changing, a clutch adapted to engage said screw at one point to cause it to travel with the power means and in one direction, a nut on said screw, a second clutch adapted to cause said nut to travel with the power means to cause the screw to travel in the other direction, and means to cause said clutches to alternately engage when the screw gets to the end of its stroke, and friction drags connected respectively to said nut and to said screw and a non-reciprocating rod reciprocating with the screw but not rotating with it.

3. In combination, a supporting casing, a motor mounted thereon, a driving sleeve connected to the armature of said motor, a screw adapted to telescope within said sleeve, a clutch sleeve carried in the first mentioned sleeve, a friction sleeve carried by said screw engaged therewith, rotating with the screw, a nut engaging with said screw having a sleeve, a second clutch adapted to engage with said last mentioned sleeve, shifting means carried by said first mentioned sleeve adapted to alternately operate said clutches, a shifting rod to operate said clutches and means connected with said screw for shifting said shifting rod at either end of the movement of the screw, and means to maintain said shifting rod yieldingly in a predetermined position until shifted.

4. In combination, a supporting casing, a motor mounted thereon, a driving sleeve connected to the armature of said motor, a screw adapted to telescope within said sleeve, a clutch sleeve carried in the first mentioned sleeve, a friction sleeve carried by said screw engaged therewith, rotating with the screw, a nut engaging with said screw having a sleeve, a second clutch adapted to engage with said last mentioned sleeve, shifting means

carried by said first mentioned sleeve adapted to alternately operate said clutches, a shifting rod to operate said clutches and means connected with said screw for shifting said shifting rod at either end of the movement of the screw, and means to maintain said shifting rod yieldingly in a predetermined position until shifted, and friction drags respectively engaging the sleeve on the nut engaging with the screw and with the screw, the first mentioned drag resisting the rotation of the nut and the second drag resisting the rotation of the screw being respectively effective when the lower and upper clutches are operating respectively.

5. In a pump, a driving motor, a driving means connected thereto, a screw, means to clutch said screw and clutch said driving means alternately, means to suspend a sucker rod on the end of the screw so arranged as to not rotate the sucker rod but to reciprocate it up and down with the screw, means connected to the sucker rod for shifting said clutches at the end of the sucker rod stroke whereby said motor rotates continuously in a given direction, said screw rotates in the same direction intermittently rising and falling and said sucker rod rises and falls without rotation.

6. In a pump, a sucker rod, a screw adapted to rotate independently thereof and to reciprocate up and down with the sucker rod, a nut for said screw, a clutch on said nut, a clutch on said screw, a rotating sleeve adapted to telescopically receive said screw, a motor for driving said sleeve, and means to shift said clutches for alternate engagement, a drag on said nut, a drag on said screw, and means for connecting said sucker rod to said clutch shifting means.

7. In a pump, a sucker rod, a screw adapted to rotate independently thereof and to reciprocate up and down with the sucker rod, a nut for said screw, a clutch on said nut, a clutch on said screw, a motor for driving said sleeve, and means to shift said clutches for alternate engagement, a drag on said nut, a drag on said screw, and means for connecting said sucker rod to said clutch shifting means, and means for preventing said drags from rotating.

8. In combination in a pump of a sucker rod, a clutch shifting arm thereon, means for connecting a screw to the rod so arranged to permit the screw to rotate independently of said sucker rod, a nut and sleeve on said screw, a clutch on said sleeve, a driving sleeve, a motor to drive said sleeve, a second clutch thereon adapted to clutch said screw, and means to connect said clutch shifting arm to said clutches.

9. In combination, a screw having grooves therein, a sucker rod, a supporting plate on said rod, drag arms pivoted thereon adapted to engage said grooves in the bottom of the screw so arranged to permit the screw to rotate therein but not to become detached therefrom and yielding means to maintain said arms in dragging engagement with said screw.

In testimony whereof, I affix my signature.

CHARLES P. EISENHAUER.