No. 616,550. Patented Dec. 27, 1898.

J. O. MOSS.

FOLDABLE CRATE OR COOP.

(Application filed Dec. 8, 1897.)

(No Model.) 3 Sheets—Sheet 1.

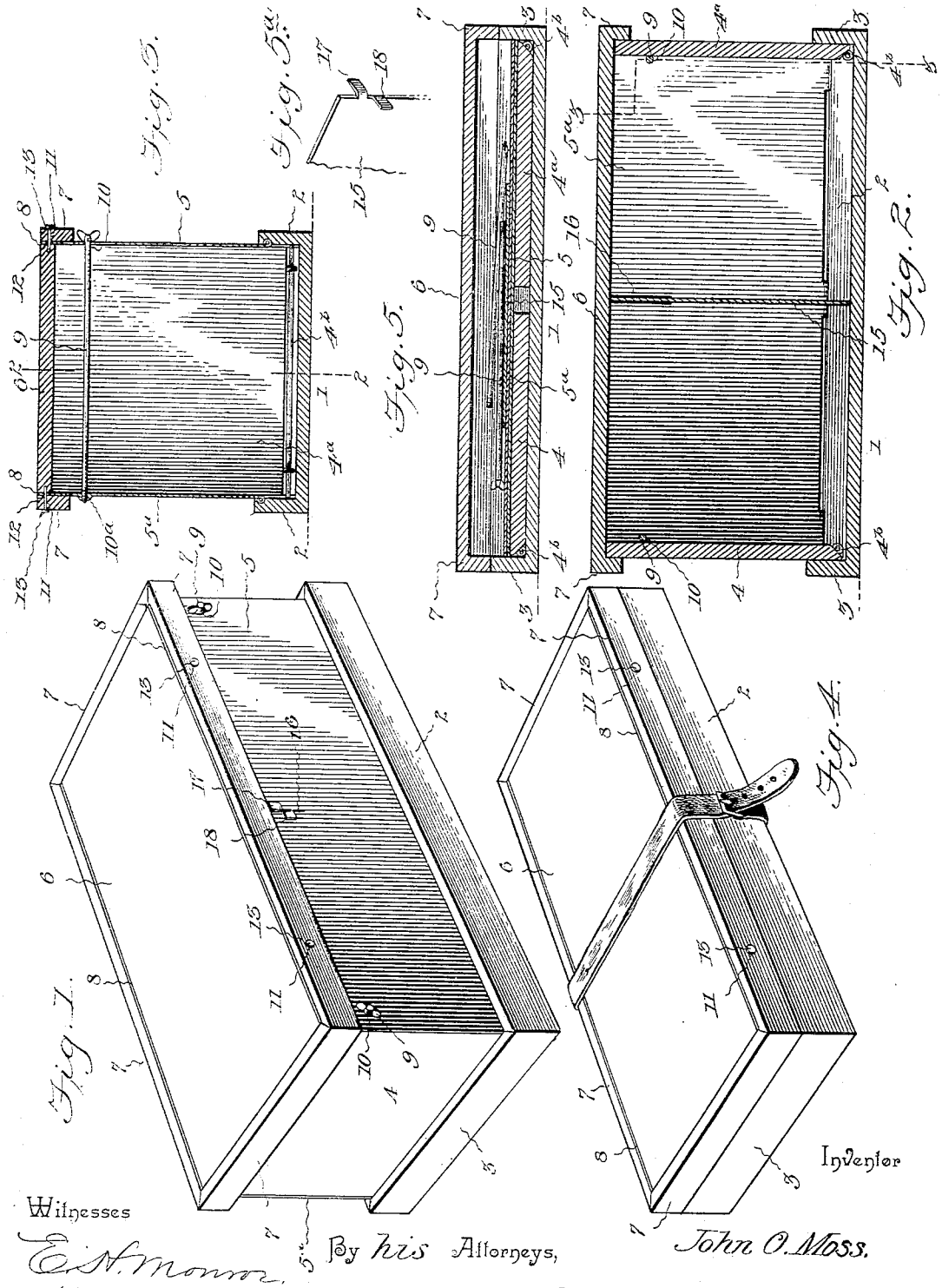

Witnesses

E. H. Monroe

H. F. Beuchorp

By his Attorneys,

Inventor

John O. Moss.

C. A. Snow & Co.

THE NORRIS PETERS CO., PHOTO-LITHO., WASHINGTON, D. C.

No. 616,550. Patented Dec. 27, 1898.

J. O. MOSS.

FOLDABLE CRATE OR COOP.

(Application filed Dec. 8, 1897.)

(No Model.) 3 Sheets—Sheet 2.

Fig. 6.

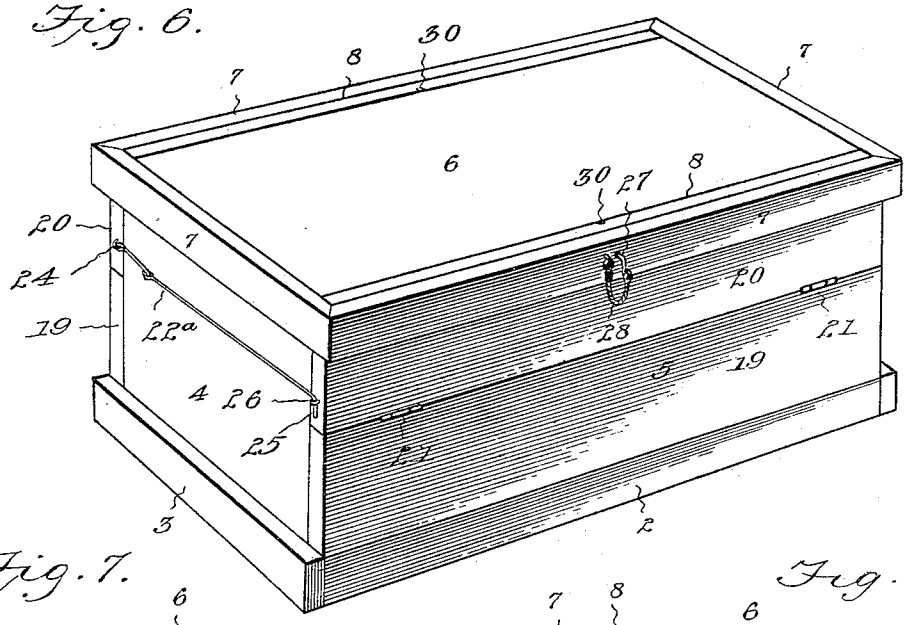

Fig. 7.

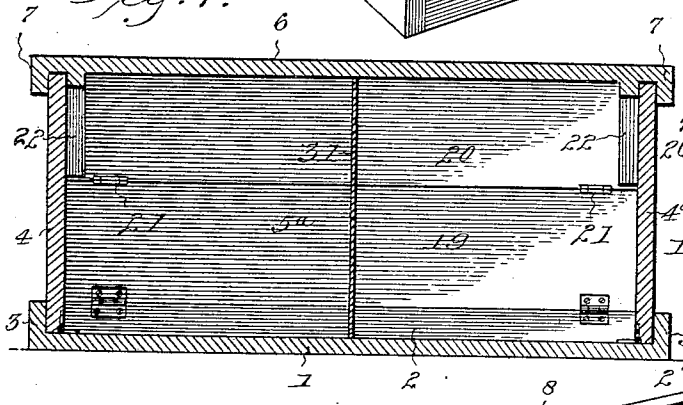

Fig. 8.

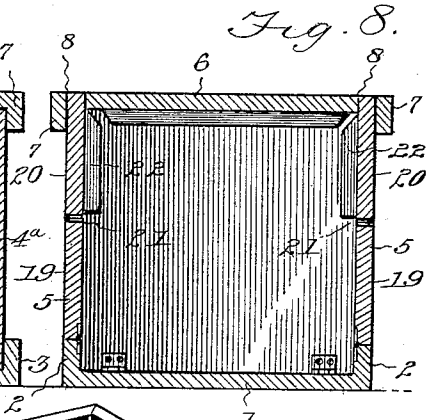

Fig. 9

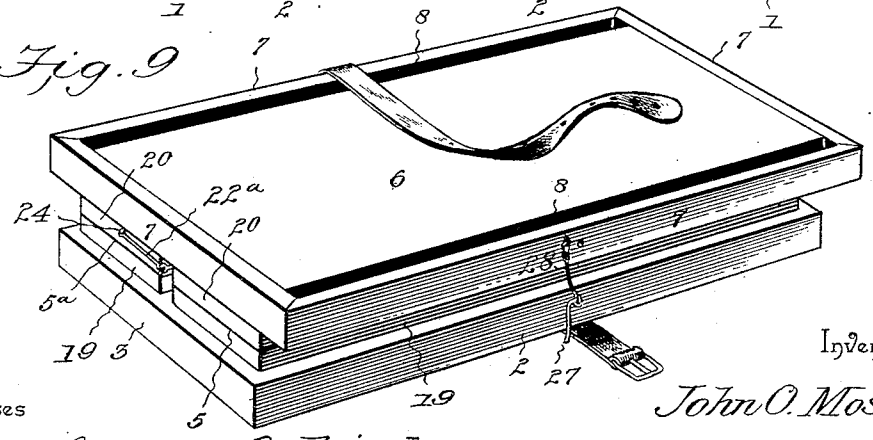

Witnesses

E. S. Monroe

H. F. Bernhard

Inventor

John O. Moss,

By his Attorneys,

C. A. Snow & Co.

THE NORRIS PETERS CO., PHOTO-LITHO., WASHINGTON, D. C.

No. 616,550. Patented Dec. 27, 1898.

J. O. MOSS.

FOLDABLE CRATE OR COOP.

(Application filed Dec. 8, 1897.)

(No Model.) 3 Sheets—Sheet 3.

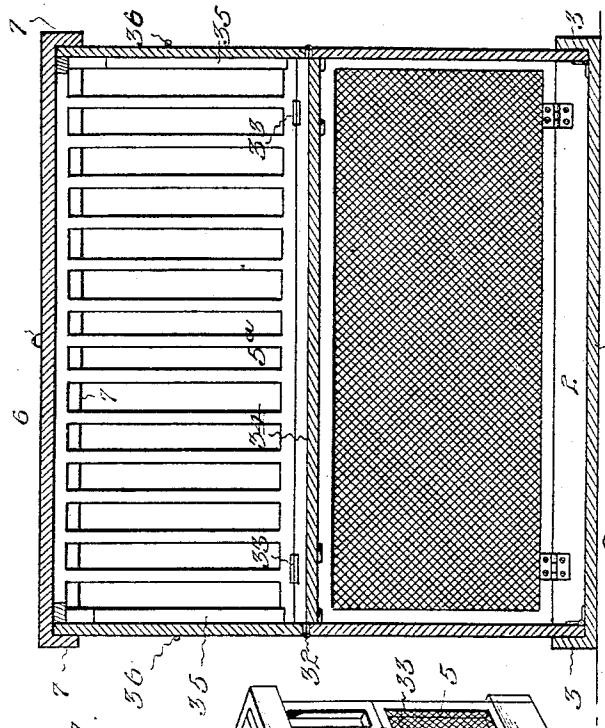

Fig. 11.

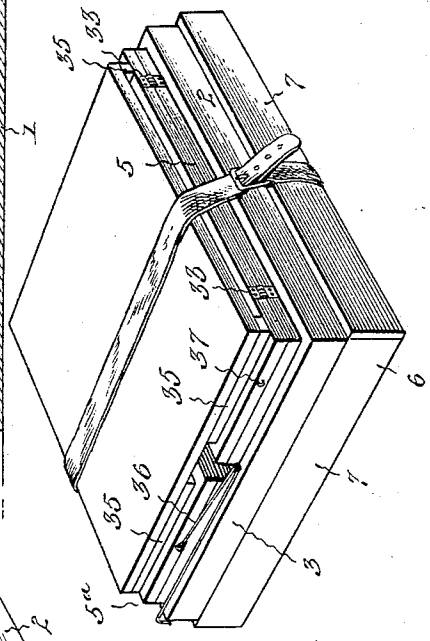

Fig. 12.

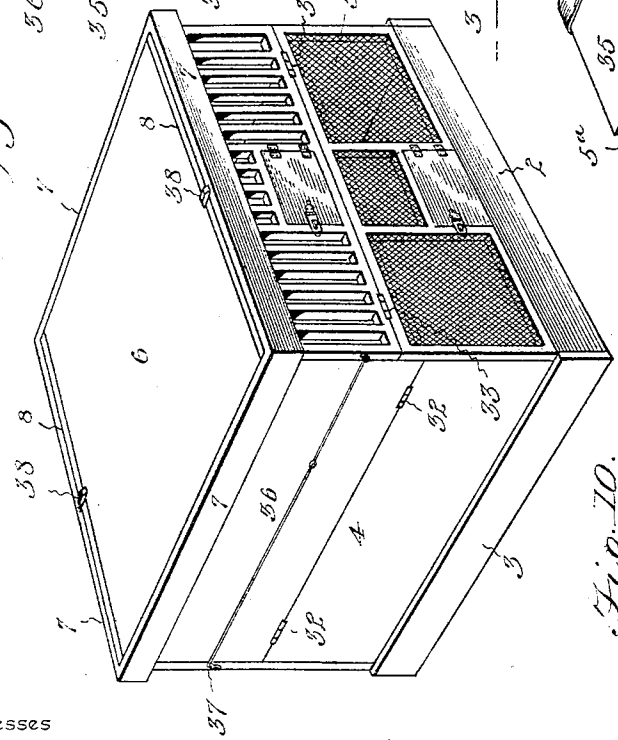

Fig. 10.

Inventor
John O. Moss

Witnesses
E. N. Monroe
H. A. Benedict

By his Attorneys,
C. A. Snow & Co.

THE NORRIS PETERS CO., PHOTO-LITHO., WASHINGTON, D. C.

UNITED STATES PATENT OFFICE.

JOHN O. MOSS, OF DELBA, TEXAS.

FOLDABLE CRATE OR COOP.

SPECIFICATION forming part of Letters Patent No. 616,550, dated December 27, 1898.

Application filed December 8, 1897. Serial No. 661,171. (No model.)

To all whom it may concern:

Be it known that I, JOHN O. MOSS, a citizen of the United States, residing at Delba, in the county of Fannin and State of Texas, have invented a new and useful Foldable Crate or Coop, of which the following is a specification.

My invention relates to improvements in foldable crates or coops of that class known to the art as "knockdown" structures; and the object that I have in view is to provide an improved construction which shall be rigid and firm when unfolded and erected for service and which may be folded in a compact condition for reshipment to the owner.

A further object of the invention is to so construct and arrange the several parts of the crate that they will be locked when unfolded by engaging with the cover, and a further object that I have in view is to provide an improved construction by which a vertical partition is held securely in place by engaging with side walls of the foldable structure.

With these ends in view my invention consists in the novel construction and combination of parts, which will be hereinafter fully described and claimed.

To enable others to understand my invention, I have illustrated the same in different embodiments in the accompanying drawings, forming a part of this specification, and in which—

Figure 1 is a perspective view of my improved foldable box or crate, illustrating the preferred embodiment of the invention. Fig. 2 is a vertical longitudinal sectional view on the plane indicated by the dotted line 2 2 of Fig. 3. Fig. 3 is a vertical transverse sectional view on the plane indicated by the dotted line 3 3 of Fig. 2. Fig. 4 is a perspective view of the crate in its knockdown or folded condition, and Fig. 5 is a sectional view of the crate in the position shown by Fig. 4. Figs. 6, 7, 8, and 9 are views in perspective, longitudinal, and transverse section of a modified construction of the foldable crate, Fig. 9 being a perspective view of the crate in its folded or knockdown condition. Fig. 10 is a perspective view of a poultry-crate in its unfolded condition for service. Fig. 11 is a vertical sectional view of the poultry-crate shown by Fig. 10. Fig. 12 is a view of the poultry-crate in its folded or knockdown condition.

Like numerals of reference designate like and corresponding parts in each of the several figures of the drawings.

I will first proceed to describe the preferred form of the foldable crate illustrated by Figs. 1 to 5, inclusive, of the drawings. 1 designates the bottom, which is provided with the side flanges 2 and the end flanges 3. 4 4^a are the ends of the crate, which are hinged directly to the bottom and are adapted to fold inwardly to rest upon the bottom, the hinges between the ends and the bottom being indicated by the numerals 4^b. 5 5^a are the sides of the crate, and said sides are hinged to the side flanges 2 on planes above the hinges 4^b, which attach the ends 4 4^a to the bottom, whereby the sides are adapted to fold inwardly upon the ends and upon each other. I prefer to construct the bottom 1 with the flanges 2 3, of sufficient depth to accommodate within themselves the ends and sides of the crate when the parts are folded, and one side, 5, is hinged to a side flange 2 at a point a little below the other hinge between the other side and its flange 2, so as to enable one side, 5^a, to fold upon the other side, 5. The ends 4 4^a are not as deep as the sides 5 5^a, and the latter are thus caused to project above the ends when the parts are turned to their upright positions. This variation in the depth or height of the sides and ends of the crate is an important feature of my invention, because the sides are adapted to engage and interlock with the cover 6 of the crate when the parts are unfolded and adjusted for service. The cover is provided at its sides and ends with depending flanges 7, and said cover is also provided with the longitudinal slots 8. As shown by the drawings, I have constructed the end flanges of the cover to extend beyond the side edges of said cover, and to said end flanges are fastened the side flanges in a manner to provide, between the side flanges and the side edges of the cover, the longitudinal slots 8; but the detail construction of the cover, with a view to providing the longitudinal slots 8 therein, may be varied and changed by a skilled mechanic without departing from the

principle of the invention. The cover is large enough to inclose the entire area of the chamber formed within the box or crate, and the end flanges of said cover are adapted to embrace the end walls 4 4ª, while the protruding upper edges of the sides 5 5ª fit within or pass through the longitudinal slots 8 in said cover. When the end and side walls are raised to their upright positions, the end walls are prevented from folding inwardly by means of tie-bolts 9, which pass through openings 10, provided in the side walls adjacent to the ends 4 4ª, to cause the bolts to lie adjacent to the ends and to practically abut against the same. These tie-bolts are held in position by means of nuts 10ª, and in the preferred embodiment of the invention the nuts are fastened to the side walls in alinement with the openings therein. I may fasten each pair of nuts to the side walls in a permanent manner; but I prefer to fasten one nut for each bolt to one side and to fit the other nut for the bolt removably on the threaded end thereof in a manner to have it bear against the other side of the crate. The side flanges of the cover are provided with transverse openings 11 at suitable distances within the ends of said cover, and said openings communicate with the longitudinal slots 8. The side walls 5 5ª are provided with openings 12 at points to coincide with the openings 11 in the side flanges of the cover when the latter is properly fitted on top of the crate or box, and through said coincident openings is passed the securing-pins 13, which thus detachably connect the side flanges of the cover and the side walls 5 5ª of the crate. In this embodiment of my invention I prefer to construct the side walls 5 5ª of sheet metal and to use in connection therewith a vertical central partition 15, which is removably held in place by interlocking joints between said partition 15 and the side walls 5 5ª. The preferred means for detachably interlocking the partition with the side walls consist in the provision of vertical kerfs or incisions 16, which are formed in the side walls at about the middle thereof, each kerf extending from the upper edge of the side wall downwardly for a suitable distance. The partition 15 is a metallic plate of form and dimensions to fit snugly between the side walls opposite to the kerfs or incisions therein, and said partition is provided on each side, near the upper edge thereof, with a pair of ears or lugs 17 18. I provide the partition with two pairs of ears or lugs, one pair being situated on one side of the partition and the other pair on the opposite side of the partition, and the lugs 17 18 of each pair are bent or arranged to extend in opposite directions from the partition and substantially at right angles thereto. The lugs 17 are arranged above the lugs 18, and the partition is adapted to be slid endwise into position within the crate and between the side walls thereof. In adjusting the partition in place care must be observed that the lugs 17 18 pass through the kerfs or incisions in the side walls, and said lugs are arranged to bear against the opposite edges of the kerfs or incisions, because they extend in opposite directions from the partition and substantially at right angles thereto. The lugs or ears lie outside of the side walls of the crate, while the partition itself is housed or contained within the crate, and said partition is thus detachably interlocked with the walls of the crate in a manner to prevent the partition from displacement and to assist in holding or bracing the side walls at a point intermediate between their bearings against the end walls 4 4ª. The partition may be easily slipped out of place by simply withdrawing its ears or lugs from the kerfs in the side walls, and it can be conveniently and quickly replaced, so as to have its ears or lugs interlock with the side walls, thus dispensing with separate fastenings for the central partition.

In adjusting the crate for service the side walls are first turned on their hinges to upright positions and to abut or bear against the side flanges of the bottom. The end walls are then raised to occupy positions between the side walls and to abut against the end flanges of the bottom, and the bolts 9 are passed through the openings in the side walls to bear against the end walls and are secured in place by the nuts heretofore described. The merchandise may now be packed in the crate, after which the cover is adjusted to have its end flanges embrace the end walls and to cause the protruding upper edges of the side walls to fit within the longitudinal slots 8 of said cover, the cover being secured in place by the insertion of the pins 13. The cover is fitted to the side and end walls to hold the parts securely in their raised or unfolded positions, and the cover itself is held in place by its engagement with the side walls and by the employment of the removable pins. To fold the crate, the cover is removed, the tie-bolts are withdrawn, the end walls are then folded inwardly upon the bottom, the side walls are folded inwardly upon the end walls and upon one another, the bolts are placed within the folded structure, and the cover is placed upon the flanges of the bottom, after which a strap or straps or a cord may be passed around the package to hold the parts securely in their folded compact positions.

In case it is desired to use the partition it may be placed in a position to have its flanges or ears interlock with the kerfs in the side walls, and when the crate is folded this partition may be placed upon the side walls and between the latter and the cover in a manner to hold it securely in position within the folded crate. The structure is adapted to fold within a compact and small compass, and it is thus adapted to be readily reshipped to the owner.

In the embodiment of my invention illustrated by Figs. 6, 7, 8, and 9 I employ the generic features of the crate or box hereinbefore described; but certain of the parts are

modified in construction to enable them to be held in position by separate fastenings and to secure the compact folding of the sides and ends in a somewhat different manner. The bottom is provided with the raised flanges at its sides and ends, and the ends are hinged directly to the bottom, so as to fold inwardly upon the same. The sides are hinged at their lower edges to the side flanges of the bottom at points above the hinged connections between the ends and the bottom for the purpose of enabling the sides to fold inwardly upon the ends when the latter are folded against the bottom. In this embodiment of the invention, however, I modify the construction of the side walls 5 5ª with a view to securing compact folding of the side walls, which are hinged at the same elevation or height to the side flanges of the bottom. Each side wall is divided longitudinally or halved to produce two sections, (indicated at 19 and 20,) and the sections of each side are hinged together at 21 to enable the section 20 to fold against the outer side of the lower hinged section 19. When raised, each side has its lower section 19 resting upon one of the side flanges of the bottom, while the upper section 20 of the side rests upon the lower section 19. The upper sections 20 of the two sides are provided on their inner faces with the transverse battens 22, adapted to bear against the ends of the crate or box and to serve as stops to arrest the inward folding movement of said ends toward the bottom of the crate. The sides are held in their raised positions by transverse sectional stays 22ª, said stays being attached to the sides outside of the box or crate and to extend across the ends thereof. I have shown each stay as consisting of two members, which are loosely joined together by interlocking eyes, and one member of the stay is connected loosely to a staple 24, fastened to the upper hinged section 20 of one side, while the other member of the stay is formed or provided with a hook 25, adapted to engage with an eye or staple 26, provided on the upper hinged section 20 of the other side wall of the crate or box. It will be observed that the hinged sides are detachably joined together by the cross-stays, one end of which is permanently connected to one hinged side and the other end of said stay being detachably connected to the other hinged side, and said sides of the box or crate have the battens on their upper hinged sections to arrest the inward folding movements of the end walls 4 4ª of the crate. The divided hinged sides project above the end walls of the crate, and the cover has the longitudinal slots 8 to receive said projecting edges of the side walls, so as to secure the detachable interlocking engagement between the slotted cover and the sides of the crate or box. Said cover is held in position by the transverse pins 27, which pass through suitable openings provided in the slotted cover and the projecting edges of the sides 5 5ª, and in this embodiment of my invention I have shown the cords or chains 28, attached to the cover and to the pins to prevent loss of the latter while the crate is in transportation. In folding the crate (shown by Figs. 6 to 9, inclusive) the locking-pins are first detached and the transverse stays are disconnected from one side of the box or crate. The cover is removed and the upper hinged sections 20 of the sides are folded downwardly against the lower hinged sections 19 of said sides in order to disengage the battens of the sides from the end walls of the box or crate. The end walls are now folded inwardly upon the bottom of the crate, the sides are folded inwardly upon the ends, and the stays are adjusted between the adjacent edges of the two hinged folded sides, and the top or cover is now placed beneath the bottom, after which the structure may be united together by straps or cords, which are passed around the folded box or crate. In this embodiment of the invention I provide the hinged divided sides with vertical grooves or kerfs 30, in which may be slipped a removable partition 31, that serves to divide the interior of the box or crate into isolated compartments, and when the box or crate is folded this partition may be placed between the cover and the bottom, to be confined or held in position by and between said parts.

In Figs. 10, 11, and 12 my invention is illustrated as embodied in a poultry coop or crate, in which I employ a transverse horizontal partition to divide the interior of the crate into upper and lower compartments for the purpose of increasing the capacity of the structure. The same general features of construction are observed in embodying the invention in the poultry-coop as in the foldable crates hereinbefore described; but in this class of devices I make the sides and ends of greater depth to accommodate the transverse horizontal partition which forms the floor of the upper compartment of the crate or coop. The bottom is provided with the flanges around its sides and ends. The end walls are hinged directly to the bottom to fold inwardly against the same, and the side walls are hinged to the side flanges at points above the hinged connections between the ends and bottom with a view to making the side walls fold inwardly upon the end walls after the latter have been folded against the bottom. For compactness in folding I make the end walls in sections, each end wall consisting of upper and lower sections, which are hinged together at 32, so that the sections of each end wall will fold one against the other previous to folding said end wall against the bottom of the crate or coop. In like manner each side wall is constructed in horizontal divided sections, which are hinged together at 33 to enable one section of the side wall to fold against the other section previous to folding the side walls inwardly upon the end walls. In the practical construction of the side walls of the coop I may employ skeleton frames, to

which are attached wire-nettings or slats for the purpose of ventilating the coop and giving light and air to the occupants thereof. The horizontal partition 34 rests upon suitable projections, such as staples, which are attached to the lower sections of the divided ends and sides of the crate, and the upper sections of the divided sides are provided on their inner faces with battens 35, against which may impinge or bear the upper sections of the divided end walls. The upper sections of the divided side walls are connected together detachably by the external flexible stays 36, which are attached at one end to the upper section of one side wall and are detachably connected at their other ends to eyes or staples 37 on the upper section of the other side wall, whereby the sectional walls, both side and end, are held together in a substantially rigid manner against collapsing. As in the construction of the crates or boxes hereinbefore described, the side walls project a short distance above the upper edges of the end walls and the cover has the longitudinal slots to receive the protruding upper edges of the side walls and the end flanges to fit against and embrace the end walls, whereby the cover is detachably interlocked with the side and end walls of the foldable crate. As one means for securing the cover in place I may provide the side walls with the pivoted buttons 38, adapted to be turned into alinement with the walls, so as to pass therewith through the slots 8 in the cover, after which the buttons may be turned at right angles across the slots in the cover to detachably hold the cover against lifting displacement on the side and end walls of the crate. As is usual in this class of devices, the side or end walls may be provided with hinged doors 40, by which access may be obtained to the upper and lower compartments of the crate. The manner of folding the crate just described is similar to that of the structures hereinbefore specified. The cover is removed and the stays are disconnected, after which the partition is taken out of the crate. The sectional ends are now folded inwardly upon the bottom, the sectional side walls then folded inwardly upon the ends, and the partition is placed upon the folded sides. The cover may be placed over the folded structure or beneath the bottom, and the parts are confined in their folded compact positions by passing straps or cords around the structure.

It is evident that changes in the form and proportion of parts and in the details of construction may be made without departing from the spirit or sacrificing the advantages of my invention.

Having thus described my invention, what I claim is—

1. In a box or crate, the side walls provided with vertical kerfs or incisions, in combination with a partition provided with oppositely-extending ears or lugs which fit in said kerfs or incisions and embrace the outside of the walls on both sides of the kerf thereof, substantially as and for the purposes described.

2. In a box or crate, the side walls provided with vertical central kerfs which open upwardly through the edges of said walls, combined with a removable partition fitted between the side walls opposite the kerfs therein, and having right-angled lugs or ears which extend in opposite directions therefrom and embrace the side walls on opposite sides of the kerfs therein, substantially as and for the purposes specified.

3. A foldable box or crate comprising a bottom provided with raised flanges at the sides and ends thereof, the end walls hinged directly to the bottom within the end flanges, the sectional side walls hinged to the upper edges of the side flanges to fold inwardly upon the end walls which rest directly on the bottom when folded and said side walls having the upper edges extended above the end walls, the cover fitted to embrace the end walls and having longitudinal slots to receive the extended edges of the side walls, and the flexible locking-rods permanently attached to one side wall outside of the end walls and detachably connected to the other side wall, substantially as described.

In testimony that I claim the foregoing as my own I have hereto affixed my signature in the presence of two witnesses.

JOHN O. MOSS.

Witnesses:
WM. T. MOSS,
D. J. MOSS.