W. J. HENRY.

DEVICE FOR MECHANICALLY AIDING THE HAND IN WRITING.

APPLICATION FILED APR. 17, 1919.

1,336,432. Patented Apr. 13, 1920.

Fig. 1

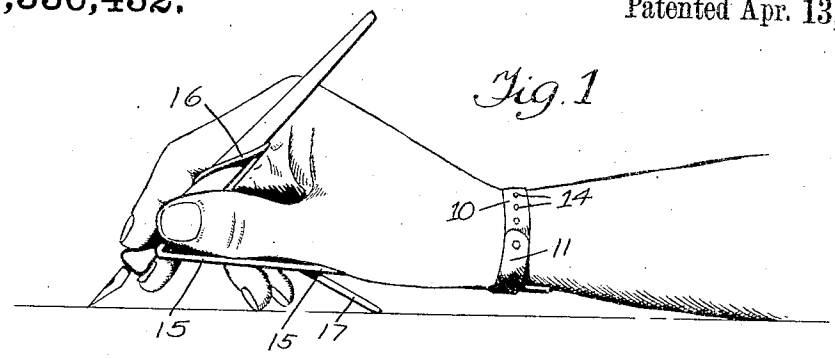

Fig. 2

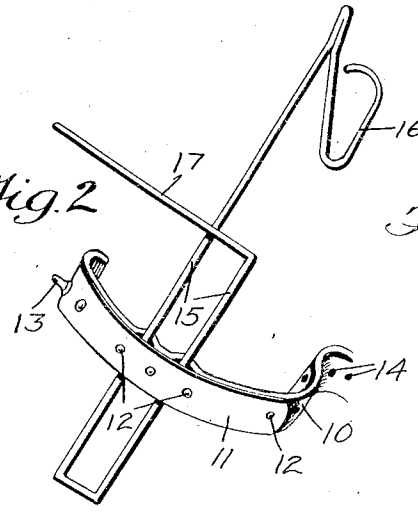

Fig. 3

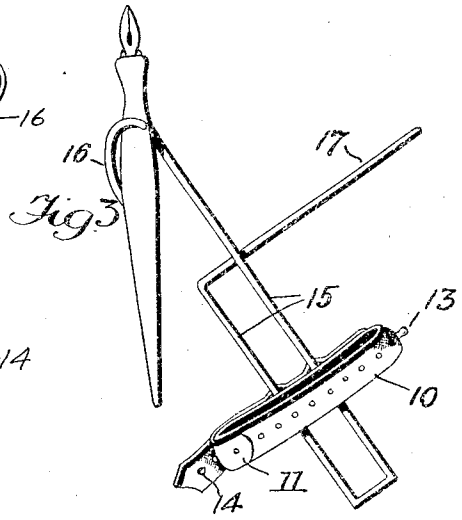

Fig. 4

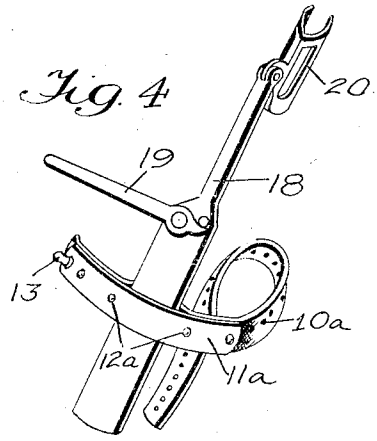

Fig. 5.

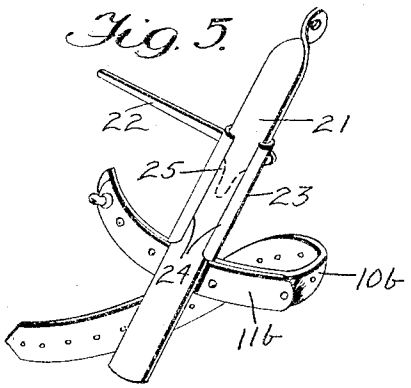

WITNESSES

George C. Myers

INVENTOR

W. J. Henry.

BY Munn & Co

ATTORNEYS

UNITED STATES PATENT OFFICE.

WILLIAM JAMES HENRY, OF AKRON, OHIO.

DEVICE FOR MECHANICALLY AIDING THE HAND IN WRITING.

1,336,432. Specification of Letters Patent. Patented Apr. 13, 1920.

Application filed April 17, 1919. Serial No. 290,754.

To all whom it may concern:

Be it known that I, WILLIAM J. HENRY, a citizen of the United States, and a resident of Akron, in the county of Summit and State of Ohio, have made certain new and useful Improvements in Devices for Mechanically Aiding the Hand in Writing, of which the following is a specification.

My present invention relates particularly to improvements in connection with pen holding and hand guiding devices of the nature described and claimed in my Patent 1197289, dated September 5, 1916, and my present improvements particularly aim toward the betterment of adjustment by virtue of a hand guide between the pen engaging element and the wrist engaging element as well as toward greater simplicity, reduced cost and general effectiveness.

The device as at present proposed has a considerable range of use, particularly in the teaching of proper penmanship in schools, colleges and the like, as well as for those effected in such way as to require the use of a guide in writing operations.

My present improvements are clearly shown in the accompanying drawings which form a part of this specification and reference to which will permit of better understanding of the following specification, as well as the claims.

In this drawing:—

Figure 1 is a side view illustrating the practical application of my invention;

Fig. 2 is a perspective view of the device as constructed in Fig. 1, removed from the hand;

Fig. 3 is a similar view illustrating the engagement of a pen therewith;

Fig. 4 is a perspective view illustrating a slightly modified form, and,

Fig. 5 is another similar view illustrating another slightly modified form.

Referring now to these figures, and particularly to Figs. 1, 2 and 3, my present improvements comprise a wrist encircling element which like my patent above referred to consists of a flexible wrist encircling strap 10, partially reinforced and held by a curved metallic band 11, to which the strap 10 is connected for a portion of its length by the use of rivets or like fastening members 12, which are arranged at spaced points, as particularly seen in Fig. 2. The band 11 has a stud 13 projecting therefrom arranged for engagement through openings 14 of the free portion of the strap 10 to adjustably connect the latter around the wrist of the user, as seen in Fig. 1.

In the form of the invention seen in Figs. 1, 2 and 3, the hand guiding member includes a single strand of wire of suitable gage, bent upon itself along the body portion of the hand guide to provide spaced parallel extensions 15, which project between the strap 10 and the band 11 intermediate certain of the rivet or fastening members 12, and which are frictionally gripped by the strap and band so as to hold the hand guide in adjustable relation with respect to the wrist encircling element.

This adjustable relation of the hand guide permits of its lengthwise adjustment for the purpose of varying the distance between the pen engaging element and the wrist encircling element, so as to fit the hand of the user, the pen engaging element in this instance being in the form of a pen clasping extension 16 at the forward free end of one of the extensions 15 of the hand guide, the opposite extension of which hand guide is bent at a right angle across the extension carrying the pen engaging element to form a laterally projecting guide arm 17 whose free end in the use of the device, and as seen in Fig. 1, is slidable upon the paper being written upon or a flat surface adjacent thereto.

In the form of the invention shown in Fig. 4, the hand guide is in the form of a flat strip of metal or other suitable material, as seen at 18, having a laterally projecting guide arm 19 secured at one end to the guide strip 18 at a point intermediate the ends of the latter. In this form the pen engaging element in the form of a spring clasp 20 is pivotally connected to the forward end of the strip 18, the rear end of which strip projects through the wrist encircling member between the strap 10^a and band 11^a, to which strap 10^a is connected by rivets or the like 12^a so that the strip 18 is frictionally gripped and held in adjustable relation, and with respect to the wrist encircling element just as in the form of the invention shown in Figs. 1 to 3.

In the construction of Fig. 5, wherein the pen engaging element in the form of a clasp as seen in Fig. 4, is removed, the hand guide is in the form of a flat strip 21 from which the guide arm 22 projects laterally at an intermediate point, and in accordance

with this form the band 11^b of the wrist encircling member attached to its strap 10^b as in the previous forms, is provided with a laterally extending portion 23 having upwardly and inwardly curved flanges 24 forming between them a channel through which the rear portion of the hand guide strip 21 extends.

The extensions 23 of the band 11^a may also have a tongue 25 struck up therefrom and bearing against one face of the guide strip 21, so as to coöperate with the flanges 24 in frictionally engaging and holding the guide strip 21 in lengthwise adjustable relation with respect to the wrist encircling element.

It is obvious that each of the constructions shown tends toward reduced manufacturing cost, and thus as regards economy and simplicity my present constructions are clearly improved with respect to my patent above referred to where the hand guide is in two relatively adjustable parts.

My present improvements take advantage of the possibility of adjustment at the wrist encircling member between the hand guide and the wrist encircling member due to the construction of the wrist encircling member with which the structure of the present hand guide is adapted to operate.

I claim:—

1. A device of the class described comprising a wrist encircling element including a securing strap and a band connected at spaced points to the said strap, a pen engaging element and a hand guide, one end of which supports the said pen engaging element and the opposite end of which extends between the band and strap of the wrist encircling element, and is frictionally held thereby in longitudinally adjustable relation thereto.

2. A device of the class described comprising a wrist encircling element including two parts connected at spaced points in face to face relation, a hand guide one end of which extends between the two parts of the wrist encircling element, and is frictionally engaged and adjustably held thereby, and a pen engaging element carried by the opposite end of the hand guide and adjustable therewith in respect to the wrist encircling element.

3. A device of the class described comprising a wrist encircling element, including two parts connected at spaced points to one another, a hand guide having a laterally projecting guide arm at a point intermediate its ends and having one end thereof extending between and frictionally engaged by the two parts of the wrist encircling element to adjustably hold the hand guide in respect thereto, and a pen engaging element carried by the opposite end of the hand guide and adjustable therewith in respect to the wrist encircling element.

WILLIAM JAMES HENRY.