PCT WORLD INTELLECTUAL PROPERTY ORGANIZATION
International Bureau

INTERNATIONAL APPLICATION PUBLISHED UNDER THE PATENT COOPERATION TREATY (PCT)

(51) International Patent Classification 5 :		(11) International Publication Number:	WO 93/06017
B65D 6/18, 6/26	A1	(43) International Publication Date:	1 April 1993 (01.04.93)

(21) International Application Number: PCT/AU92/00514

(22) International Filing Date: 24 September 1992 (24.09.92)

(30) Priority data:

PK 8513	24 September 1991 (24.09.91)	AU
PL 2134	29 April 1992 (29.04.92)	AU

(71) Applicant *(for all designated States except US)*: DASH, Valerie [AU/AU]; 3 Bilkurra Place, Niagara Park, NSW 2250 (AU).

(72) Inventor; and
(75) Inventor/Applicant *(for US only)* : DASH, Alan [AU/AU]; 3 Bilkurra Place, Niagara Park, NSW 2250 (AU).

(74) Agent: MAXWELL, Peter, Francis; Peter Maxwell & Associates, Blaxland House, 5 Ross Street, North Parramatta, NSW 2151 (AU).

(81) Designated States: AU, CA, JP, US, European patent (AT, BE, CH, DE, DK, ES, FR, GB, GR, IE, IT, LU, MC, NL, SE).

Published
With international search report.

(54) Title: COLLAPSIBLE CAGE

(57) Abstract

A collapsible cage (10) has a base (11) upon which is supported a plurality of side panels (15, 16, 17, 18) and top panel (19). The assembled cage (10) has its side panels (15 to 18) in an upright position with the top panel (19) located thereover, the panels (15 to 19) being locked into their positions by locking means (23, 24, 25 and 99). The side panels (15 to 18) and top panel (19) may be collapsed so that they assume a substantially horizontally stacked position over the base (11) by operation of the collapsing means (60, 33, 34, 36 and 85). The locking means comprises a vertically displaceable member (23) having a catch means (24) mounted on a first panel and a recessed portion (25) on an adjacent second panel for receiving the catch means. A vertical rod (21) connected to the displaceable member (23) extends downwardly to engage an opening in the base of the cage. Collapsing is achieved by pivoting one pair of opposite panels to the base and pivoting the other opposite pair of panels one to an adjacent base pivoting panel. Hinges pivoting adjacent panels are double hinges allowing a panel to pivot inwards to lay on the inside of the adjacent panel, outwards to a first outward position coplanar with the adjacent panel and to a second outward position laying on the outside of the adjacent panel. The top panel has a slide and hinge arrangement to allow the top panel to be parallel with and on the outside of a side panel before pivoting of the side panel to the collapsed position.

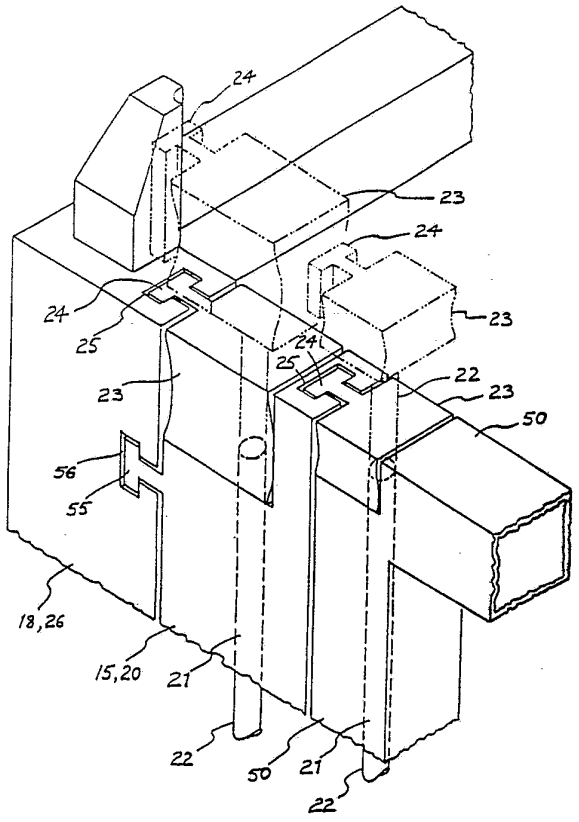

FOR THE PURPOSES OF INFORMATION ONLY

Codes used to identify States party to the PCT on the front pages of pamphlets publishing international applications under the PCT.

AT	Austria	FI	Finland	MN	Mongolia
AU	Australia	FR	France	MR	Mauritania
BB	Barbados	GA	Gabon	MW	Malawi
BE	Belgium	GB	United Kingdom	NL	Netherlands
BF	Burkina Faso	GN	Guinea	NO	Norway
BG	Bulgaria	GR	Greece	NZ	New Zealand
BJ	Benin	HU	Hungary	PL	Poland
BR	Brazil	IE	Ireland	PT	Portugal
CA	Canada	IT	Italy	RO	Romania
CF	Central African Republic	JP	Japan	RU	Russian Federation
CG	Congo	KP	Democratic People's Republic of Korea	SD	Sudan
CH	Switzerland			SE	Sweden
CI	Côte d Ivoire	KR	Republic of Korea	SK	Slovak Republic
CM	Cameroon	LI	Liechtenstein	SN	Senegal
CS	Czechoslovakia	LK	Sri Lanka	SU	Soviet Union
CZ	Czech Republic	LU	Luxembourg	TD	Chad
DE	Germany	MC	Monaco	TG	Togo
DK	Denmark	MG	Madagascar	UA	Ukraine
ES	Spain	ML	Mali	US	United States of America

COLLAPSIBLE CAGE

FIELD OF THE INVENTION

The present invention relates to collapsible cages useful for the transportation or storage of a wide variety of items.

BACKGROUND ART

The transportation of goods in containers to a destination is often followed by the return of the containers, empty of goods, to their source.

The empty containers are conventionally returned in their original shape and take up the same carrying area or volume on the transportation vehicle as they had when they were loaded with goods.

It would be advantageous if the containers, once emptied, where reduced in overall size so that the transportation vehicle were able to carry a greater number of containers or allocate carrying space to goods for the return journey.

It is an object of the present invention to overcome or substantially ameliorate the shortcomings of the prior art.

DISCLOSURE OF THE INVENTION

According to the invention there is provided a collapsible cage comprising a base, a plurality of side panels adapted to be supported on the base in both an upright and collapsed position, locking means adapted to allow the panels to be locked into and unlocked from their upright position when forming the cage, and collapsing means adapted to allow the panels to be collapsed and

assume a substantially horizontally stacked position over the base.

In a preferred form of the invention, the collapsible cage includes a top panel adapted to be supported on the side panels when in an upright position, wherein the top panel is lockable by locking means and collapsible by collapsing means so that the side panels and top panel can assume a substantially horizontally stacked position over the base.

The locking means preferably comprises a lockable member mounted on a first panel and a recessed portion on an adjacent second panel, the lockable member including catch means adapted to engage within the recessed portion, thereby locking the first panel to the adjacent second panel.

The collapsible cage of the invention may also include guide means adapted to cooperate with the locking means, whereby the guide means ensure that the panels are properly orientated in their cage forming position before the panels are locked or unlocked by the locking means.

It is also preferred that the collapsing means includes means for pivoting a first side panel about an adjacent second side panel so that the said first and second side panels are substantially coplanar to each other and means for lowering the substantially coplanar panels onto the base, so that the panels assume a substantially horizontally stacked position over the base.

Preferably, the pivoting means includes double axis hinge means that provide a first axis of rotation of the first side panel about the second side panel to enable the first side panel to pivot to a first outer position and a second axis of rotation of the first side panel about the second side panel to enable the first side panel to pivot from the first outer position to a second outer position where the said first and second side panels are substantially coplanar to each other.

BRIEF DESCRIPTION OF THE DRAWINGS

In order that the invention may be more readily understood and put into practical effect, reference will now be made to the accompanying drawings, in which:-

Fig. 1 is an isometric view of a collapsible cage according to a first embodiment of the invention,

Fig. 2 is an isometric top view of a locking arrangement for the collapsible cage of Fig. 1,

Fig. 3 is an exploded isometric view of a pivoting hinge assembly for the cage of Figs. 1 and 2,

Fig. 4 is an isometric view of a collapsible cage according to a second embodiment of the invention showing a side panel having been pivoted outwardly,

Fig. 5 is a sectional top view through AA of the pivoting hinge assembly of Fig. 3 when the hinge assembly is supporting coplanar panels at a first open cage orientation of 0° to each other,

Fig. 6 is a sectional top view through AA of the pivoting hinge assembly of Fig. 3 when the hinge assembly is supporting panels at a closed cage orientation of 90° to each other,

Fig. 7 is a sectional top view through AA of the pivoting hinge assembly of Fig. 3 when the hinge asembly is supporting panels at a second open cage orientation of 180° to each other,

Fig. 8 is a sectional top view through AA of the pivoting hinge assembly of Fig. 3 when the hinge assembly is supporting panels at a third open cage orientation of 180° to each other,

Fig. 9 is a sectional top view through AA of the pivoting hinge assembly of Fig. 3 when the hinge assembly is supporting coplanar panels at a fourth open cage orientation of 360^{0} to each other,

Fig. 10 is a side view of coplanar panels which are at a first open cage orientation of 0° to

each other being lowered onto the base of the cage of Figs. 1 or 4,

Fig. 11 is a side view of the coplanar panels of Fig. 10 resting on the base of the cage of Figs. 1 or 4,

Fig. 12 is a side view of a slide and hinge assembly for the top panel of the cage of Fig. 1,

Fig. 13 is a side view of the slide and hinge assembly of Fig. 12 being pivoted about a side panel of the cage of Fig. 1, and

Fig. 14 is an isometric view of a preferred panel for use in the collapsible cage according to the invention.

DESCRIPTION OF PREFERRED EMBODIMENT

The cage 10 of Fig. 1 has a square base 11 at each corner of which is a support member (only 12, 13 and 14 shown) that cooperatively support the cage 10 on a surface. The cage 10 has four side panels 15, 16, 17 and 18 and a top panel 19 that is shown by arrows A pivoting upwardly around the upper edge of panel 16.

The panel 15 differs from the other side panels of the cage 10 of Fig. 1 in that it is hinged along a horizontal axis at its midline extending between the panel side members 20 and 48. Located between the panel side members 20 and 48 are top and bottom subpanels 50 and 51 respectively. The top subpanel 50 is pivotally interconnected to a midline frame member 30, which supports

the meshwork of panel 51, by a pair of opposed double acting hinges 46 that enable the top subpanel 50 to pivot outwardly and downwardly as shown by arrow B so that the top subpanel 50 can become parallel with the bottom subpanel 51. The panel side members 20 and 48 of the panel 15 are stationary during this operation.

Although the cage 10 of Fig. 1 is shown with a top panel 19, a top panel is optional. The preferred pivoting mechanism of the top panel 19 is shown in Figs. 12 and 13, but the top panel 19 is not shown in the remaining drawings which show the locking and collapsing process as it relates to a cage, such as that shown in Fig. 4, having a base and side panels only.

Referring to the cage 10a of Fig. 4, at opposite ends of the upper surface of each of the panels 16a and 18a are male projections 39, 40, 41 and 42 that are adapted to be received within complimentary female cavities located at the underside of the support members so as to facilitate the stacking of assembled cages.

Generally, in order to collapse the cage 10a of Fig. 4, the panel 15a is unlocked from its engagement with panel 18a and then pivoted to a position, as shown, where it is substantially coplanar with or parallel to the panel 16a and on the outside of the cage 10a. Similarly, in order to collapse the cage 10 shown in Fig. 1, the panel 15 must be unlocked from its engagement with panel 18 and then pivoted (as shown by arrow C) to a similar position to that of panel 15a shown in Fig. 4.

The following is a description of the locking arrangement and of how the panel 15 is unlocked from the panel 18 of cage 10 of Fig. 1 with particular reference being made to Fig. 2. Although Fig. 2 also shows the locking arrangement between the panel 15 and top subpanel 50 of cage 10 shown in Fig. 1, reference may also be made to Fig. 2 to illustrate the locking arrangement for the panel 15a to panel 18a of cage 10a of Fig. 4.

The panel side member 20 of panel 15 has a tubular passageway 21 extending the full length thereof and through which passes a rod 22. The rod 22 is spring mounted such that, when it is raised upwardly, it has a bias to resume its original lower position. When in its lower position, the lower end of the rod 22 engages an opening such as hole 22a shown in Fig. 4 in the base 11a.

At the upper end of the rod 22 is a lifting member 23 adapted to be gripped so as to raise the rod 22. The lifting member 23 has a catch portion 24 integral therewith that is adapted to fit within a correspondingly shaped recess 25, also shown as recess 25a in Fig. 4, located on panel side member 26 of panel 18.

When the catch portion 24 is to be removed from the recess 25, the rod 22 must be raised against the force of the spring (not shown) located in the passageway 21. When the catch portion 24 is clear of the recess 25, the opposite end of the rod 22 is also clear of the hole (22a, in the base 11 and so the cage 10 can be opened between these panels 15 and 18 by pivoting about the opposite side

of the panel 15 as shown by arrow C in Fig. 1.

The side member 20 of panel 15 also has a guide 55 formed integrally therewith. The side member 26 of panel 18 has an aperture 56 extending the full width thereof and shaped so as to receive the guide 55 therethrough.

The fit of the guide 55 within the aperture 56 is sufficiently close that it eliminates any significant vertical movement of the side of the panel 15 about the adjacent side member 26 of panel 18 and also acts as a means for ensuring that the catch portion 24 is correctly aligned with and fits into recess 25.

The aforementioned locking arrangement is also suitable for locking the panel 15a to panel 18a of the cage 10a of Fig. 4.

An identical locking arrangement exists between adjacent panel side members of locking panels 16 and 16a and their respective pivoting panels 17 and 17a.

Fig. 2 also shows the locking arrangement between the top subpanel 50 and the panel side member 20 of panel 15. This arrangement is similar to the locking arrangement between the panel side member 20 of panel 15 and panel side member 26 of panel 18 described above, with the only significant difference being the absence of an aperture and guide arrangement. An aperture and guide arrangement similar to that between panel side members 20 and 26 may be used between the side member of top subpanel 50 and panel side member 20 but the aperture should not extend the full width of the side member 20 but should terminate before it

emerges at the rear surface thereof. Such an arrangement will ensure that the top subpanel 50 can only pivot outwardly and not inwardly. The numerals used in relation to the locking arrangement between the panel side members 20 and 26 are used to identify identical features in the locking arrangement between the top subpanel 50 and panel side member 20.

The following is a description of the identical vertical pivoting arrangement for panels 15a and 17a of the cage 10a of Fig. 4, with particular reference being made in the description to Figs. 3 to 9 and how the unlocked panel 15a may be pivoted against either the inside or outside of the panel 16a. The same vertical pivoting arrangement may be used to pivotally open an unlocked panel 15 against the outside of panel 16 of the cage 10 of Fig. 1.

The pivoting arrangement for panel 15a enables the panel 15a to vertically pivot about 360° of angle. In Fig. 4, the panel 15a is shown to have pivoted about 270° of angle from its closed cage forming position to a pre-lowering position where it is adjacent and substantially coplanar or parallel with the panel 16a and on the outside of the cage 10a. The panel 15a can also pivot 90° inwardly from its closed cage forming position so as to be coplanar with and on the inside of panel 16a.

There are two identical pivoting hinge assemblies 60 and 61 for panel 15a, both connecting between the panel side member 35 of panel 16a and panel side member 27 of panel 15a. Identical pivoting hinge assemblies are used to

pivotally connect the panel 15 to panel 16 of the cage 10 of Fig. 1.

Each pivoting hinge assembly 60 and 61 has double action pivoting axes whereby the panel 15a initially pivotally opens about a first pivoting axis and thereafter, to bring it into parallel alignment with and to the outside of panel 16a, pivots about a second pivoting axis.

Pivoting hinge assembly 60 is shown in its exploded or disassembled state in Fig. 3. A first hinge portion 62 is part of panel side member 35, a second hinge portion 70 is part of panel side member 27, and a third hinge portion 78 comprises a connecting member between the first hinge portion 62 and second hinge portion 70.

The first hinge portion 62 has a first hinge connector receiving cavity 65 and a pair of opposed guide lugs 66 and 67 therewithin, that define a first vertical pivoting axis 63 therebetween. There is a second hinge connector receiving cavity 68 having openings top and bottom to opposed tubular passageways 69 and 69a sharing a second vertical pivoting axis 64 (shown in Figs. 5 to 9). The second hinge portion 70 has a third hinge connector receiving cavity 71 having a pair of opposed lock arms 72 and 73. Arm 72 has an upper recessed landing 74 adapted to slide behind and receive guide lug 66 of first hinge portion 62. Arm 73 has a lower recessed landing 75 adapted to slide behind and receive guide lug 67 of first hinge portion 62. The arrangement of recessed landings 74 and 75 and guide lugs 66 and 67 serves to prevent instability of

the pivoting panel about the stationary panel.

Arms 72 and 73 also have opposed tubular passageways 76 and 77 sharing the first pivoting axis 63.

Shown in relation to the third hinge portion 78 is the first pivoting axis 63 and the second pivoting axis 64. Centred about both axes 63 and 64 in third hinge portion 78 are tubular passageways 79 and 80 respectively.

The third hinge portion 78 acts as a double hinged connector plate and has a major member 81 adapted to fit between the arms 72 and 73 of second hinge portion 70 so that the passageway 79 is axially aligned with passageways 76 and 77, thereby allowing the third hinge portion 78 and the second hinge portion 70 to pivot about each other around axis 63 when a cylindrical shaft 47 is located through these passageways.

The third hinge portion 78 also has a minor member 82 adapted to fit within cavity 68 of first hinge portion 62 so that the passageway 80 is axially aligned with passageways 69 and 69a, thereby allowing the third hinge portion 78 and the first hinge portion 62 to pivot about each other around axis 64 when a cylindrical shaft 47a is located through these passageways.

When the first, second and third hinge portions 62, 70 and 78 respectively, are assembled by way of the connecting cylindrical shafts, the unlocked panel 15a can initially pivot outwardly about first pivoting axis 63 and then pivot outwardly about pivoting axis 64 to bring it into parallel alignment with panel 16a.

The sectional view shown in Fig. 6 is through line AA of the hinge assembly 60 when assembled and supporting panels 15a and 16a of a cage 10a that is closed.

The cage 10a may be opened by pivoting the unlocked panel 15a from its position as shown in Fig. 6 either into the cage or out of the cage.

Pivoting the unlocked panel 15a into the cage can allow the panel 15a to rest coplanar with and on the inside of panel 16a, as shown in Fig. 5. This movement is achieved by the panel 15a pivoting inwardly about axis 63.

Pivoting the unlocked panel 15a outwardly from the cage entails a series of pivoting actions about both axes 63 and 64 as shown in Figs. 7 to 9.

In Fig. 7, the panel 15a has been pivoted outwardly about axis 63 from its closed position (as shown in Fig. 6) by 90° of angle so that it is in line with the stationary panel 16a. Further pivoting in the same direction about axis 63 is prohibited by the recessed location of axis 63 with respect to the adjacent outer corner of panel 16a.

Outward pivotal movement of panel 15a can only continue if the opposed lock arms 72 and 73 and major member 81, which are pivotally interconnected by shaft 47, are moved out from the first hinge connector receiving cavity 65. This is achieved by causing the panel 15a to pivot about axis 64 so that it assumes a position as shown in Fig. 8, thereby exposing the cavity 65 and the opposed guide lugs 66 and 67.

Further outward pivotal movement of panel 15a can now continue as the panel 15a is free to move by pivoting of the third hinge portion 78 about axis 64. Such further pivoting of panel 15a allows the third hinge portion 78 to pivot about axis 64 by another 90° of angle and the panel 15a itself to pivot about axis 63 by another 180° of angle, so that the panel 15a assumes its fully opened position as shown in Fig. 9 where it is coplanar or parallel with and on the outside of panel 16a.

Therefore, a full 360° of angular rotation of panel 15a about panel 16a can be carried out with the pivoting hinge assembly as described above operating through its double action pivoting axes 63 and 64 to allow the panel 15a to be pivoted to the inside or outside of panel 16a.

An identical pivoting arrangement exists between adjacent panel side members of pivoting panels 17 and 17a and their respective receiving panels 18 and 18a, so as to allow panels 17 and 17a to be swung to the inside or the outside of their respective cages 10 and 10a.

The substantially parallel panels 15a and 16a and substantially parallel panels 17a and 18a of cage 10a may now be lowered onto the base 11a.

In general terms, this is achieved by having angled groove tracks recessed in each of the support members and groove track engaging members that project from the adjacent panel side member into the recessed groove tracks. Also, one of the two support members that support each of the substantially parallel panels has a depression seat

formed in its upper side into which a correspondingly shaped projection of the adjacent panel side member may sit. The depression seat is located on the support member that supports the panel side members which are connected by the vertical pivoting arrangement.

The following is a detailed description of the lowering arrangement and how the panels 15 and 16 of cage 10, when parallel and with panel 15 being on the inside of panel 16, may be lowered onto the base 11, with particular reference being made to Figs. 10 and 11. Figs. 10 and 11 also show the pivoting hinge assembly 60 in assembled form from side on.

The support member 13 has an angled groove track 33 and a depression seat 36. The groove track 33 (shown in dotted outline) is recessed into the inner surface of the support member 13. The side member 35a of panel 16, which is supported when standing upright by the support member 13, has a groove track engaging member 34 projecting therefrom into the groove track 33. The panel side member 35a has a depression seat engaging projection 37. The parallel panels 15 and 16 may be raised in accordance with the member 34 following the groove track 33.

However, before the parallel panels 15 and 16 can be pivoted, the parallel panels 15 and 16 must be raised to a height sufficient for the projection 37 to clear the depression seat 36. Once this has occurred, the parallel panels 15 and 16 may be pivotally lowered flat onto the base 11 as shown in Fig. 11, during which operation the

groove track engaging member 34 returns downwardly through the groove track 33 to near or at the original position it assumed when the panel 16 was standing upright.

An identical lowering arrangement exists for lowering parallel panels 17 and 18 onto the already lowered parallel panels 15 and 16.

Because the parallel panels 17 and 18 are rested on top of the lowered parallel panels 15 and 16, the final location of the groove track engaging member in the groove track at each of the support members that support the parallel panels 17 and 18 will be higher in the track than that shown in Fig. 11 for parallel panels 15 and 16. The angled shape of the groove track 33 enables the parallel panels 17 and 18 to be rested parallel with the parallel panels 15 and 16 so as to form a horizontally stacked arrangement of panels.

The pivoting arrangement and lowering arrangement of the panels of cage 10a of Fig. 4 can be functionally similar to that described for the panels of the cage 10 of Fig. 1 so as to allow the collapsed panels of cage 10a to assume a horizontally stacked arrangement.

When the top panel 19 is present on the cage 10 (as shown in Fig. 1) the aforementioned sequence of events is repeated with the only difference being that the top panel 19, which is pivotally connected to panel 16 by a double acting slide and hinge assembly, shown in Figs. 12 and 13, and locked at its opposite side to panel 18, must be pivotally raised to allow both the pivoting of panel 15

against panel 16 and the pivoting of panel 17 against panel 18, with the top panel 19 then being pivotally lowered through operation of the double acting slide and hinge assembly to be parallel and on the outside of the upright parallel panels 15 and 16.

The double acting slide and hinge assembly 85 shown in Figs. 12 and 13 is located adjacent both the upper corners of panel 16.

The side panel member 86 of top panel 19 has a groove 87 and slideably engaged within the groove 87 is a projecting member 89 (shown in dotted outline) projecting inwardly from an L-shaped hinge 88.

The L-shaped hinge 88 is pivotably connected to a recessed portion 90 (shown in Fig. 13) of the panel side member 84 of panel 16 about pivoting axis 91.

In order to raise and lower the top panel 19 to be parallel and on the outside of either the upright panel 16 alone or the upright parallel panels 15 and 16, the top panel 19 is first slid horizontally in the direction from right to left with reference to Fig. 12, the sliding being controlled by the engagement of projecting member 89 with groove 87. Referring to Fig. 1, the top panel 19 has a pair of guide members 99 that engage into correspondingly shaped recesses located in the panel top member of panel 16.

When the top panel 19 has been slid horizontally a sufficient distance for the guide members 99 to clear their respective recesses in panel 16. the top panel 19 is lifted

so as to pivot about pivoting axis 91. At a suitable lift angle the panel 19 is then slid upwardly so that the groove 87 reaches at or near the limit of its sliding movement set by the projecting member 89 or other appropriate position to allow the panel 19 to continue its outwardly pivoting motion. At this location, the panel 19 may be further outwardly rotated about the axis of the projecting member 89 and, as long as the side edge of panel 19 is clear of panel side member 84 of panel 16 during this rotation, the panel 19 will complete its 270° angle of rotation to be parallel with and on the outside of panel 16.

The horizontal stacking of the preferred collapsed cages of the invention on top of each other is facilitated by having an appropriately shaped female recess at the underside of each of the four support members (only 12, 13 and 14 shown in Fig. 1) into which can fit snugly the upper portion of each of the support members as shown in Fig. 11.

In another embodiment of the invention, one or more of the side panels may include continuous solid sheet material in place of the meshwork, or a plurality of sheet material, as shown in Fig. 14. For instance, reinforced sheet steel or timber may be used. This may be particularly advantageous where leak prone liquids or powders and the like contained in flexible soft containers are to be transported or stored in the collapsible cage of the invention. A sheet steel panel 53 having a reinforcing steel inner frame structure is shown in Fig. 14.

The panel side members 93 and 94 of the panel 53 are constructed substantially in accordance with the panel side members of stationary panel 16a so that the panel 53 can be pivoted and lowered in similar fashion. A trap door 95 extending between side members 93 and 94 is pivotally connected to an inner frame cross member 96 by hinges 97. The trap door 95 may pivot outwardly as shown by arrow D to allow the release of materials stored in the cage. There are a pair of locking bars 98 connected at opposite ends of the trap door 95 that can slidably engage into holes in the side members 93 and 94 (only opposite end of hole 54 shown) so as to secure the trap door 95 to the panel side members 93 and 94.

Various other modifications may be made in details of design and construction without departing from the scope or spirit of the invention.

CLAIMS

1. A collapsible cage comprising a base, a plurality of side panels adapted to be supported on the base in both an upright and collapsed position, locking means adapted to allow the panels to be locked into and unlocked from their upright position when forming the cage, and collapsing means adapted to allow the panels to be collapsed and assume a substantially horizontally stacked position over the base.

2. The collapsible cage of claim 1 including a top panel adapted to be supported on the side panels when the side panels are in an upright position, wherein the top panel is lockable by locking means and collapsible by collapsing means so that the side panels and top panel can assume a substantially horizontally stacked position over the base.

3. The collapsible cage of claim 1 or claim 2 wherein the locking means comprises a lockable member mounted on a first panel and a recessed portion in an adjacent second panel, the lockable member including catch means adapted to engage within the recessed portion, thereby locking the first panel to the adjacent second panel.

4. The collapsible cage of claim 3 wherein the locking means is adapted to lock a first side panel to an adjacent second side panel and wherein the lockable member includes vertical movement means that allow the catch means to be lowered into engagement with the recessed portion and to be raised so as to disengage from the recessed portion.

5. The collapsible cage of claim 4 wherein vertical movement of the lockable member is biased by spring means that opposes raising of the lockable member, but favours lowering of the lockable member.

6. The collapsible cage of claim 5 wherein the lockable member includes rod means for engaging an opening in the base, so that when the catch means is lowered into engagement with the recessed portion, the rod means is lowered into engagement with the opening in the base, and when the catch means is raised so as to disengage from the recessed portion, the rod means is raised so as to disengage from the opening in the base.

7. The collapsible cage of claim 1 or claim 2 including guide means adapted to cooperate with the locking means, whereby the guide means ensure that the panels are properly orientated in their cage forming position before the panels are locked or unlocked by the locking means.

8. The collapsible cage of claim 7 wherein the guide means comprises a male portion protruding from a first panel and a female portion recessed in an adjacent second panel and adapted to engage the male portion, the male portion being adapted to be moved in a horizontal plane with opening and closure of the first panel so that the male portion will disengage and engage respectively the female portion.

9. The collapsible cage of claim 1 wherein at least one of the side panels includes a subpanel, the at least one side panel having a frame, a portion of which frame pivotally supports the subpanel, and wherein the subpanel is lockable

to the frame of the side panel by locking means, the locking means comprising a lockable member mounted on the subpanel and a recessed portion in the frame of the side panel, the lockable member including catch means adapted to engage within the recessed portion, thereby locking the subpanel to the side panel.

10. The collapsible cage of claim 1 or claim 2 wherein the collapsing means includes means for pivoting a first side panel about an adjacent second side panel so that the said first and second side panels are substantially coplanar to each other and means for lowering the substantially coplanar panels onto the base, so that the panels assume a substantially horizontally stacked position over the base.

11. The collapsible cage of claim 10 wherein the top panel, when unlocked, is collapsible by collapsing means which include means for pivoting the top panel about an adjacent side panel or about adjacent coplanar side panels so that the top panel and adjacent side panel or adjacent coplanar side panels are substantially coplanar to each other, and means for lowering the so formed substantially coplanar panels onto the base.

12. The collapsible cage of claim 10 wherein the pivoting means includes double axis hinge means that provide a first axis for rotation of the first side panel about the second side panel to enable the first side panel to pivot to a first outer position and a second axis for rotation of the first side panel about the second side panel to enable the

first side panel to pivot from the first outer position to a second outer position where the said first and second side panels are substantially coplanar to each other.

13. The collapsible cage of claim 12 wherein the double axis hinge means comprises a first member mounted to the first side panel, a second member mounted to the second side panel and a third member pivotally connected about the first axis of rotation to the first member and pivotally connected about the second axis of rotation to the second member.

14. A collapsible cage substantially as hereinbefore described with reference to the drawings.

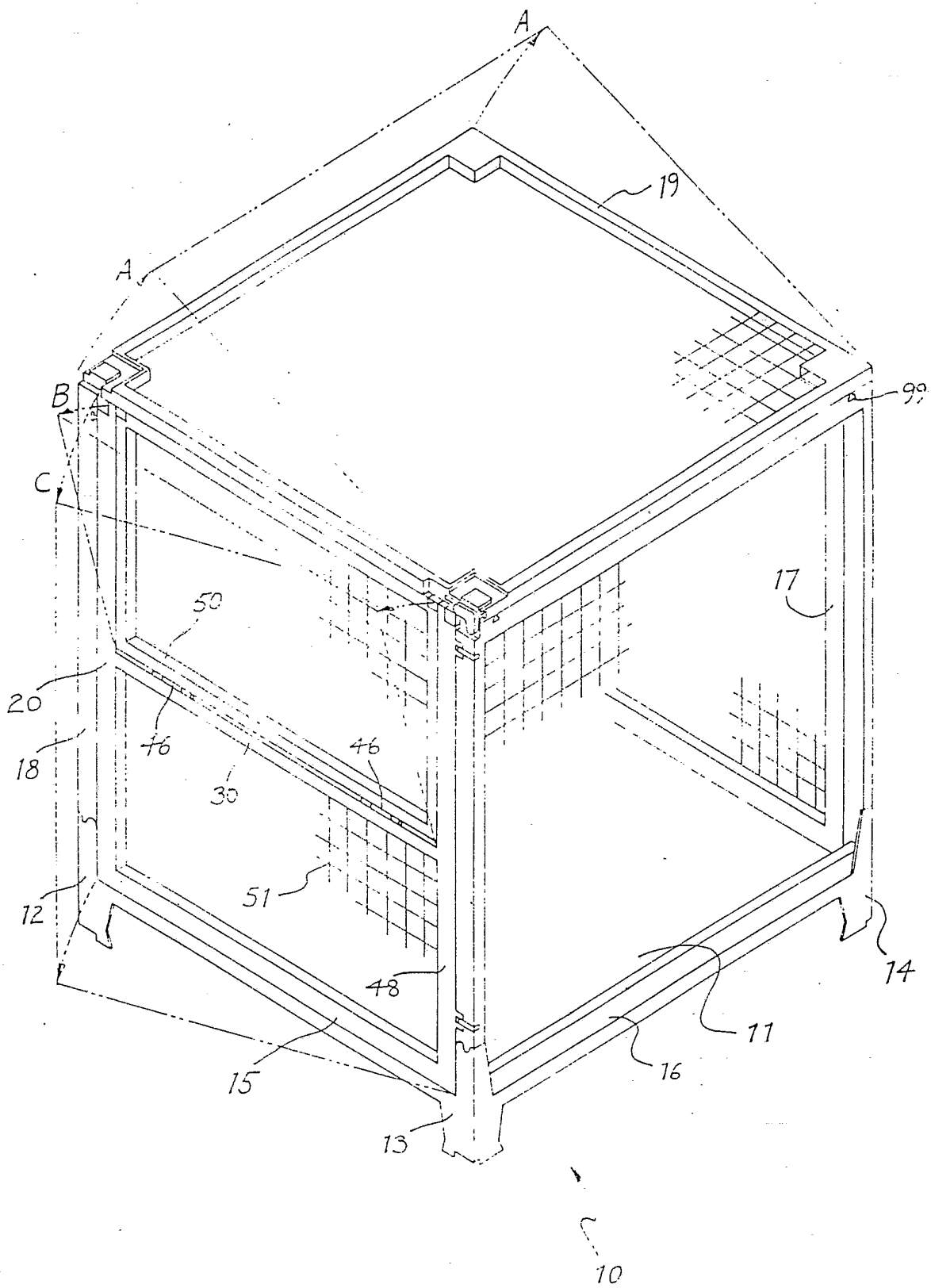

Fig. 1

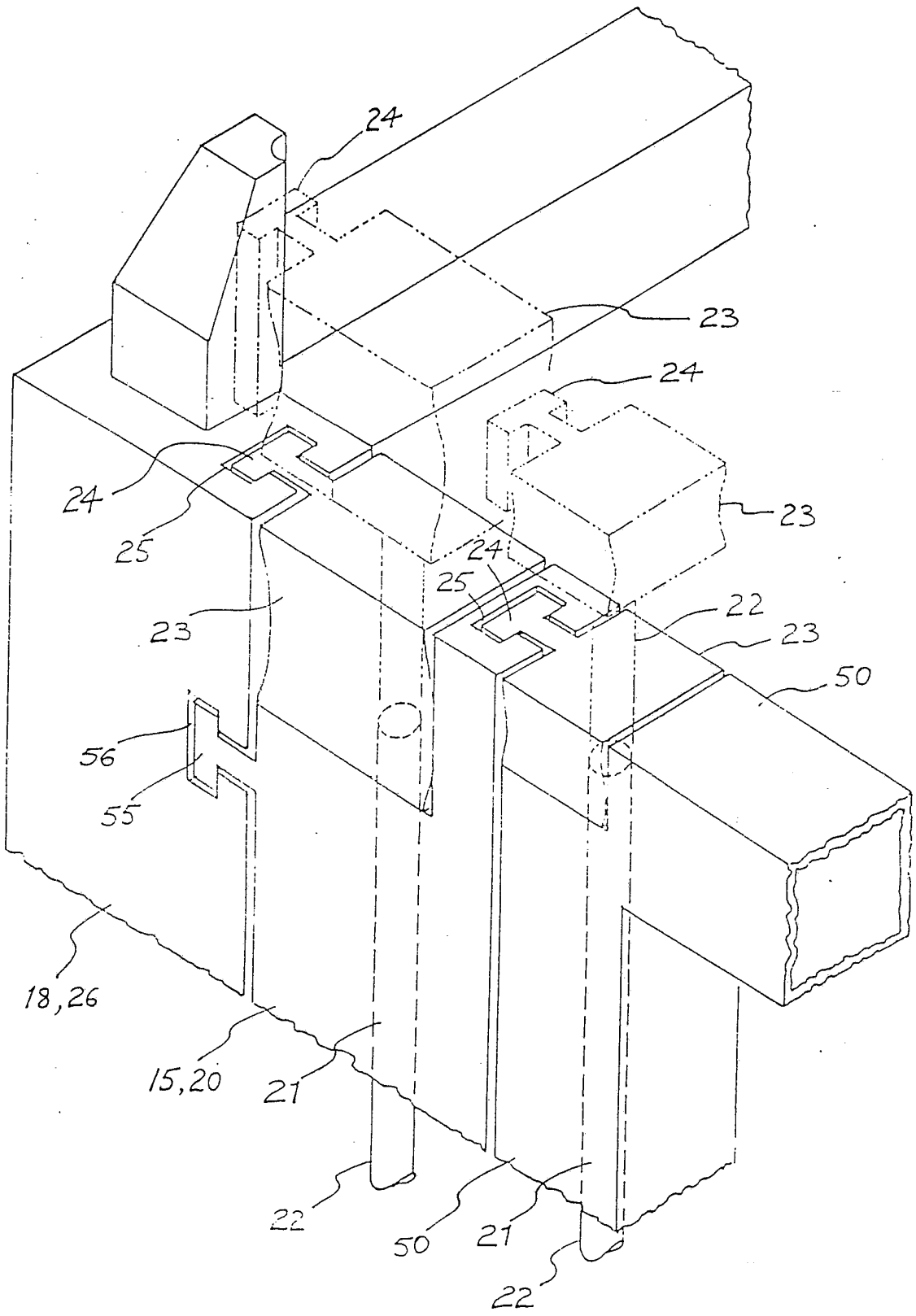

Fig. 2

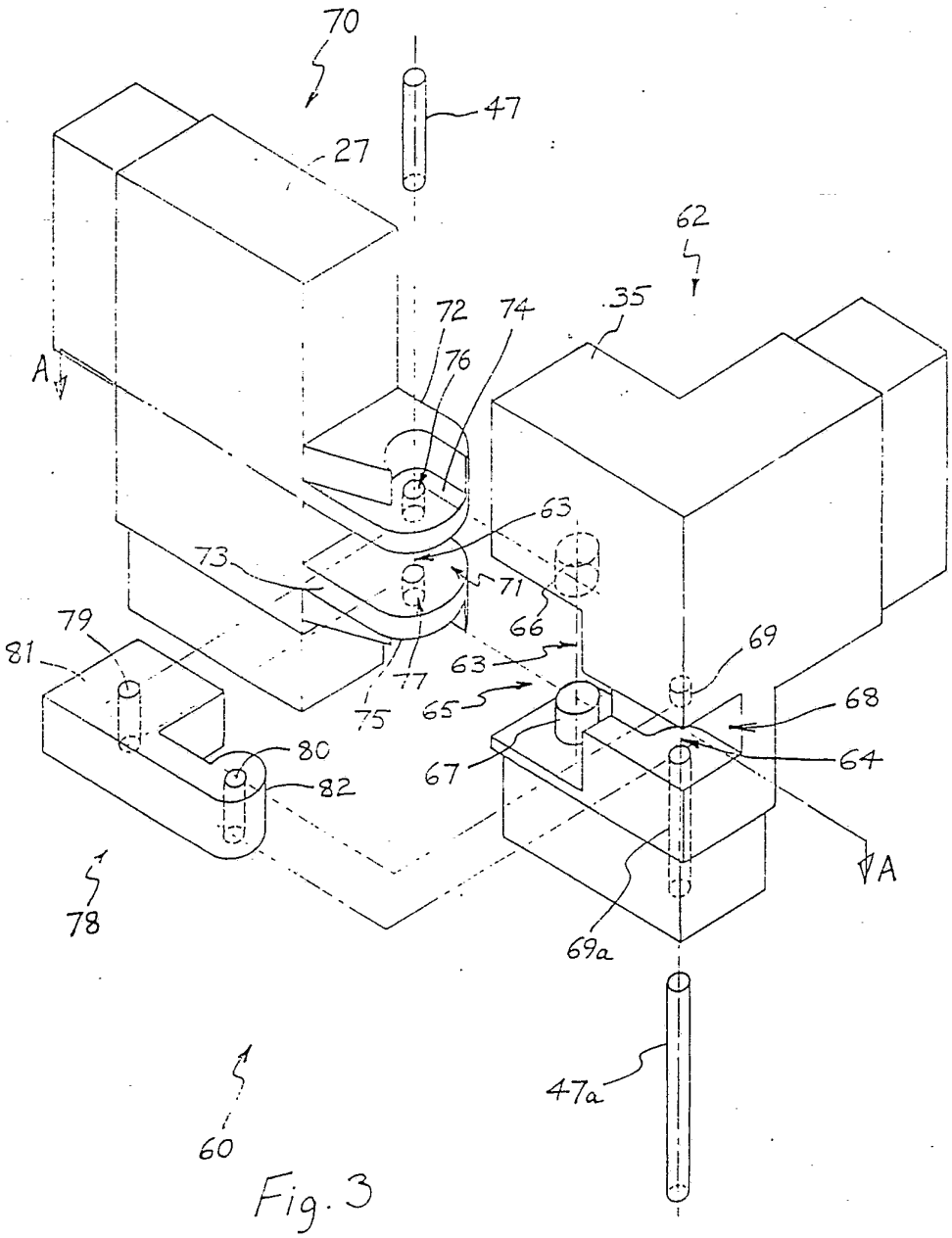
70
47
27
62
35
72
74
76
A
63
73
71
66
79
81
69
63
77
75
65
68
80
67
64
82
A
78
69a
47a
60

Fig. 3

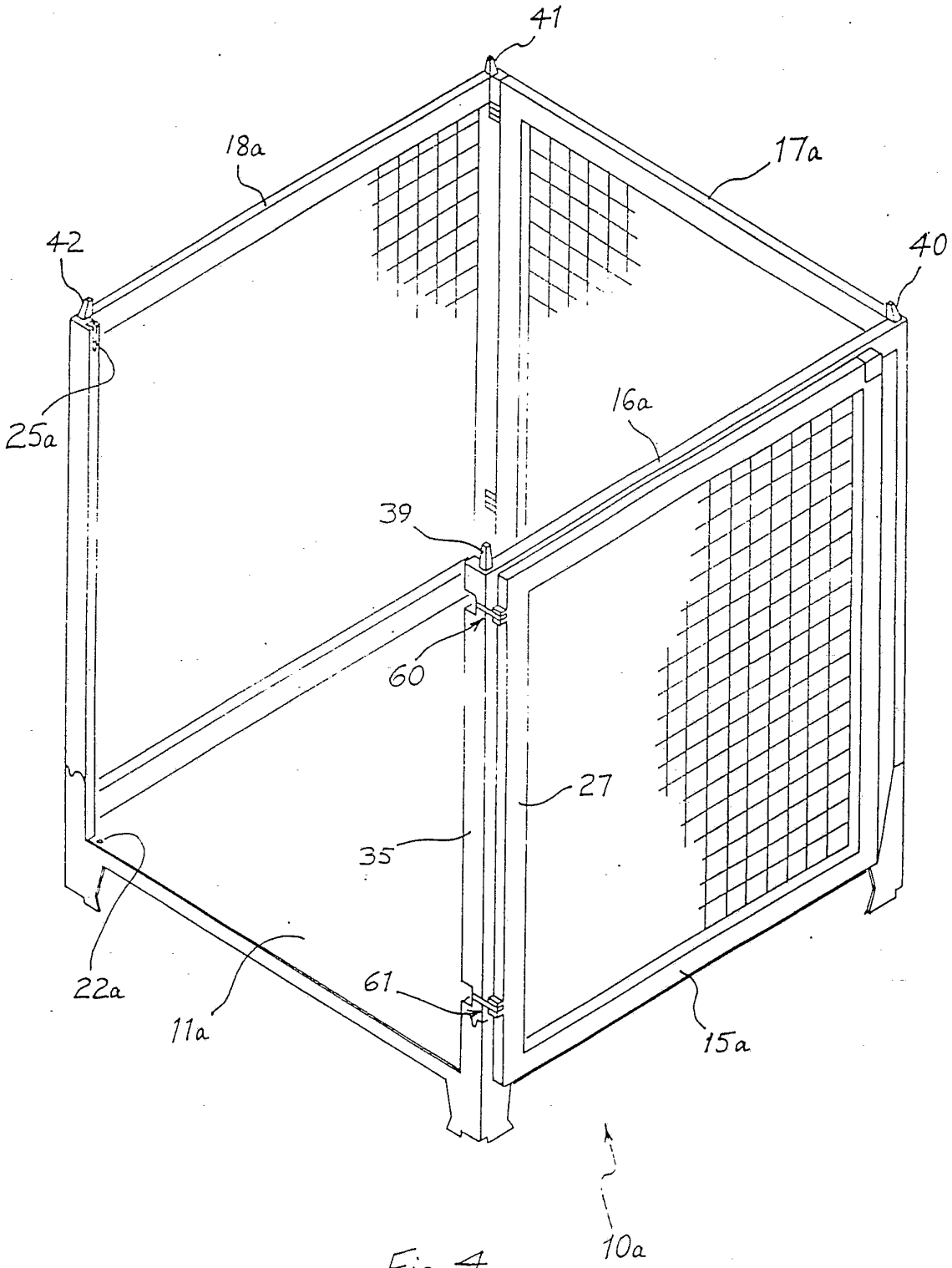

Fig. 4

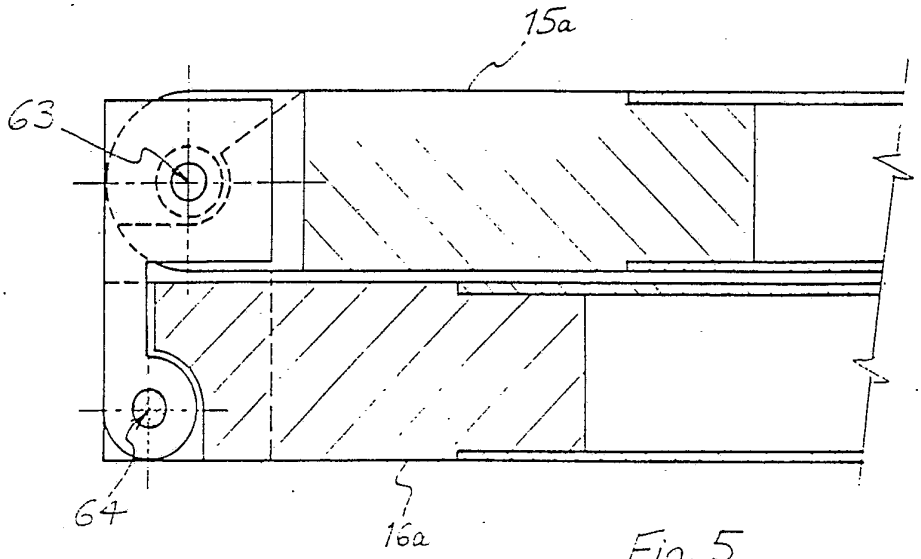

Fig. 5

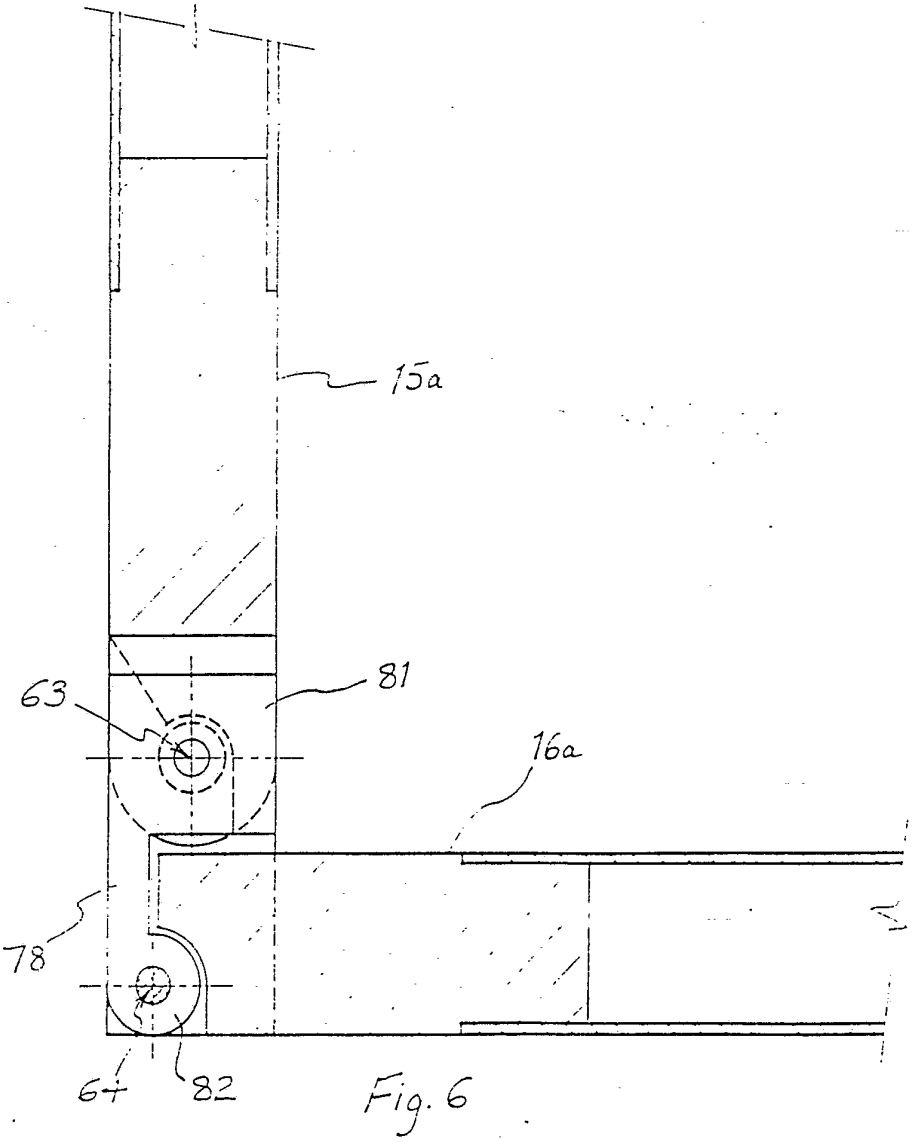

Fig. 6

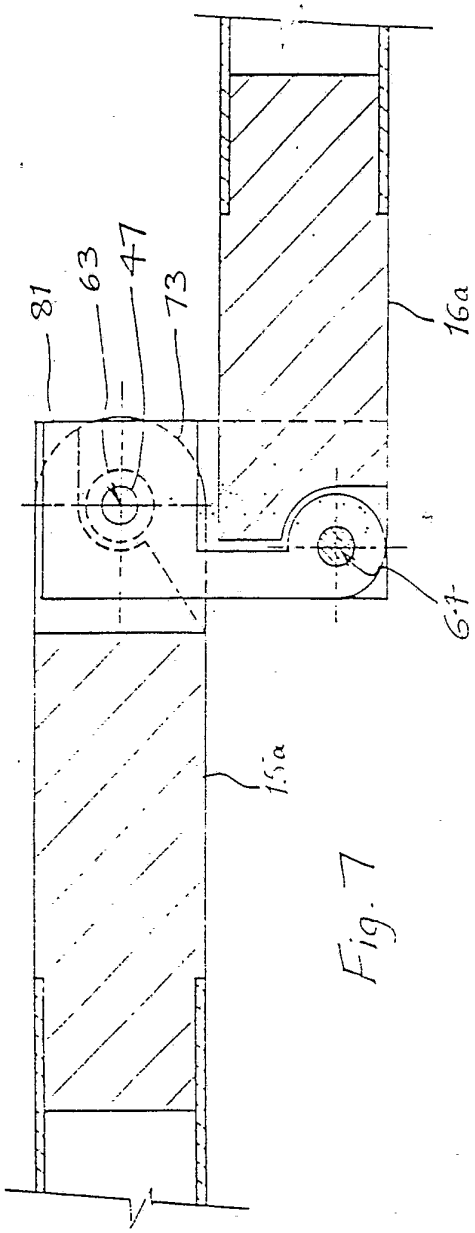

Fig. 7

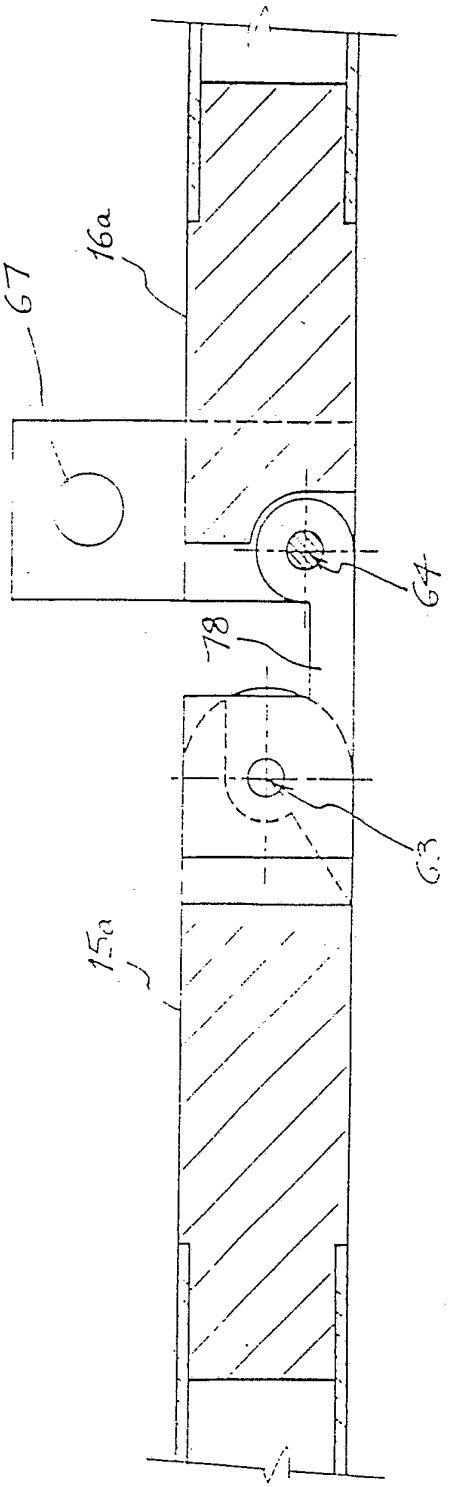

Fig. 8

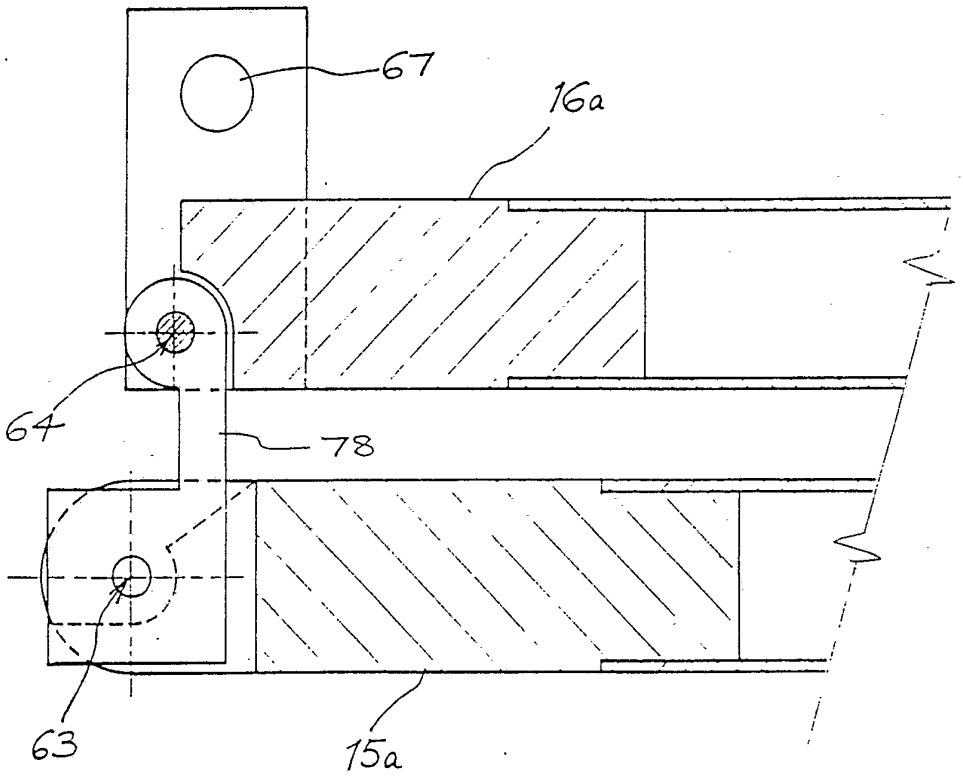

Fig. 9

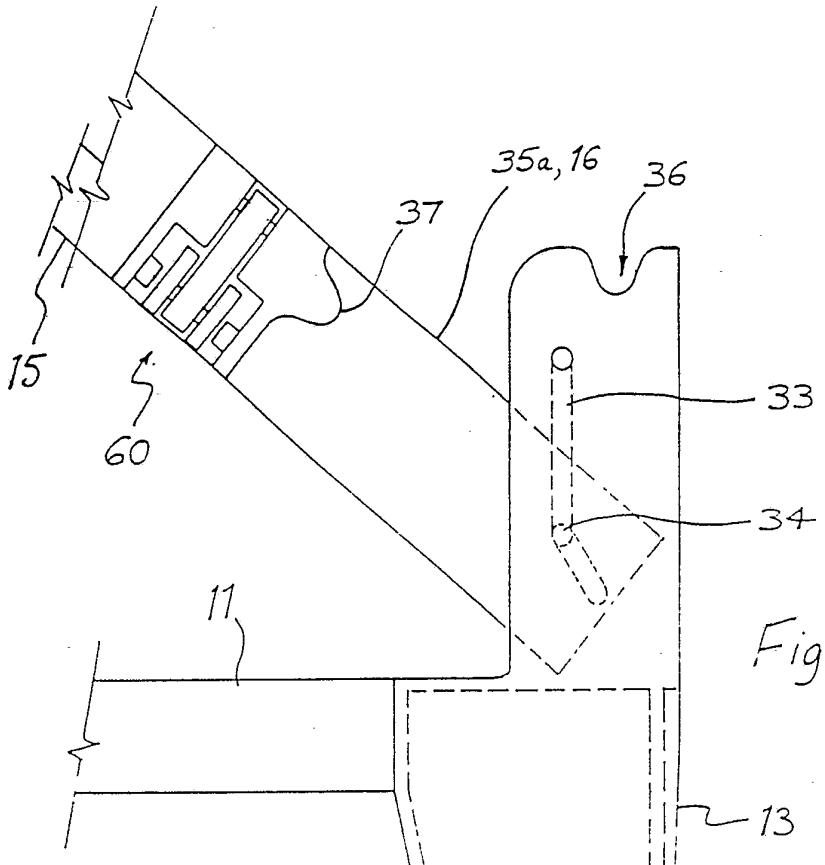

Fig. 10

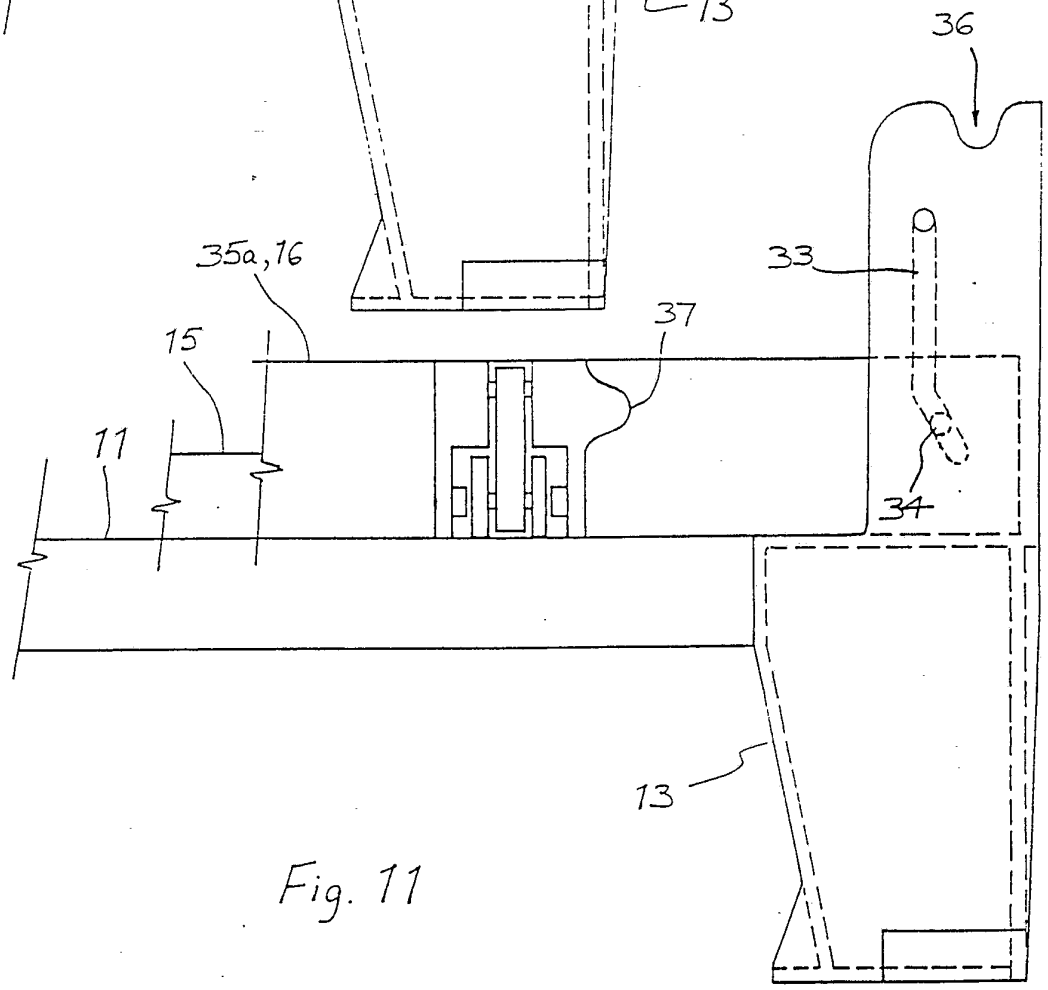

Fig. 11

Fig. 12

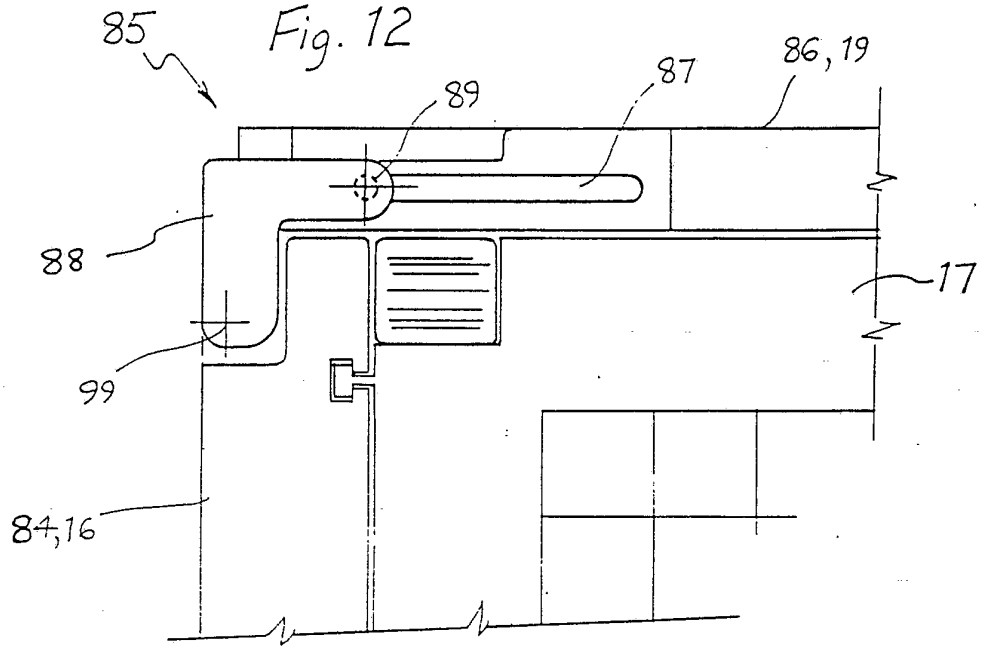

Fig. 13

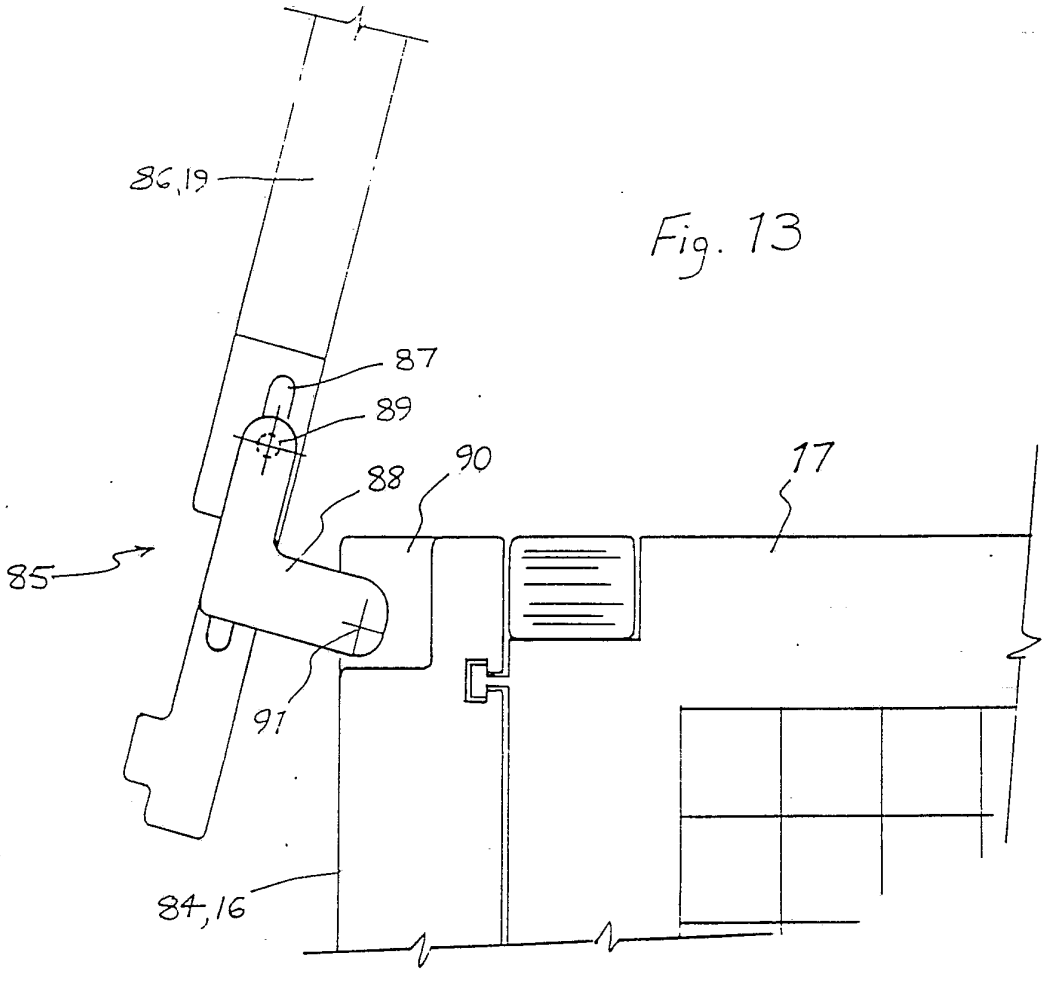

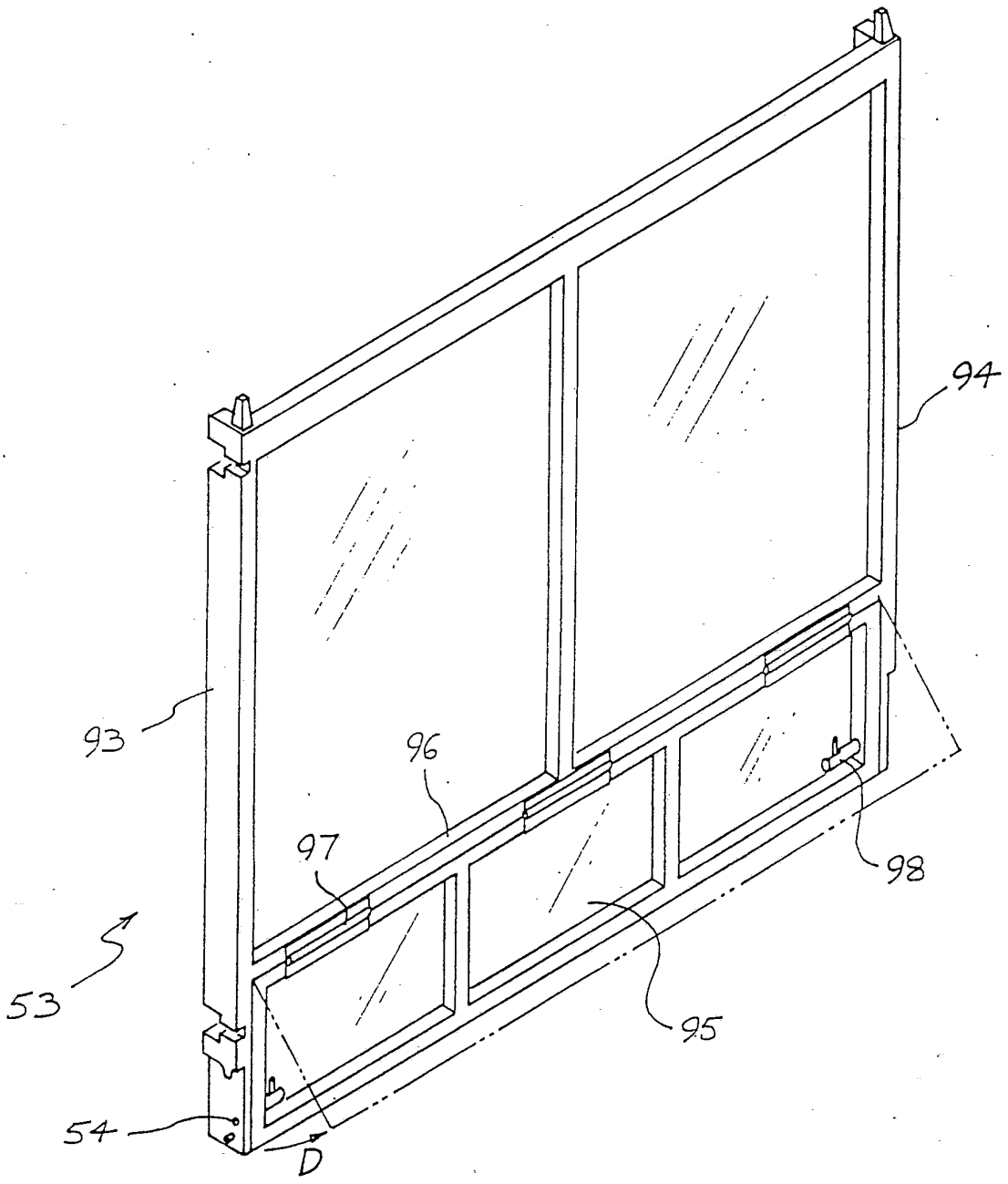

Fig. 14

A. CLASSIFICATION OF SUBJECT MATTER

Int. Cl.[5] B65D 6/18, 6/26

According to International Patent Classification (IPC) or to both national classification and IPC

B. FIELDS SEARCHED

Minimum documentation searched (classification system followed by classification symbols)

IPC: B65D 6/18, 6/26, 7/26, 7/30, 7/32, 9/14, 9/22, 9/24, 19/12, 19/16

Documentation searched other than minimum documentation to the extent that such documents are included in the fields searched

Electronic data base consulted during the international search (name of data base, and where practicable, search terms used)

AU: IPC as above

C. DOCUMENTS CONSIDERED TO BE RELEVANT

Category	Citation of document, with indication, where appropriate, of the relevant passages	Relevant to Claim No.
P,X Y	AU,A,85420/91 (TOSEVSKI), 25 September 1991 (25.09.91) Whole document	1,2,9,10 7,8,11
X	AU,B,19338/70 (454134), (GEETAINERS AUSTRALIA INTERNATIONAL LIMITED), 7 October 1971 (07.10.71) Whole document	1,3,4,5
X Y	AU,B,45117/85 (589903) (BRAMBLES HOLDINGS LIMITED), 22 January 1987 (22.01.87) Whole document Fig 13, items 17,18	1,3,4,7,8 7,8

[X] Further documents are listed in the continuation of Box C.

[X] See patent family annex.

* Special categories of cited documents :

"A" document defining the general state of the art which is not considered to be of particular relevance

"E" earlier document but published on or after the international filing date

"L" document which may throw doubts on priority claim(s) or which is cited to establish the publication date of another citation or other special reason (as specified)

"O" document referring to an oral disclosure, use, exhibition or other means

"P" document published prior to the international filing date but later than the priority date claimed

"T" later document published after the international filing date or priority date and not in conflict with the application but cited to understand the principle or theory underlying the invention

"X" document of particular relevance; the claimed invention cannot be considered novel or cannot be considered to involve an inventive step when the document is taken alone

"Y" document of particular relevance; the claimed invention cannot be considered to involve an inventive step when the document is combined with one or more other such documents, such combination being obvious to a person skilled in the art

"&" document member of the same patent family

Date of the actual completion of the international search	Date of mailing of the international search report
28 October 192 (28.10.92)	23 NOV 1992 (23.11.92)

Name and mailing address of the ISA/AU

AUSTRALIAN PATENT OFFICE
PO BOX 200
WODEN ACT 2606
AUSTRALIA

Facsimile No. (06) 2853929

Authorized officer

R.J. KIRBY

Telephone No. (06) 2832369

C(Continuation). DOCUMENTS CONSIDERED TO BE RELEVANT

Category*	Citation of document, with indication, where appropriate of the relevant passages	Relevant to Claim No.
P,X	DE 4025957 (JURGENS), 20 February 1992 (20.02.92) Whole document	1,3,7,8
X	AU,B,20527/88 (602229) (FOREST PRODUCTS AUSTRALIA PTY. LTD.), 9 February 1989 (09.02.89) Whole document	1,3,4
X	AU,B,34800/89 (614133) (REES OPERATIONS PTY. LTD.), 23 November 1989 (23.11.89) Whole document	1,2,3,9,11
X	AU,A,19479/88 (GKN CHEP LIMITED), 29 December 1988 (29.12.88) Figs. 1 to 10	1,2,3
X	Derwent Abstract Accession No. 90-273607/36, Class Q32, SU 1541-134 (OVECHKIN), 4 April 1983 (04.04.83)	1,3,4,5
X	AU,B,63641/60 (248045) (INGVARTSEN), 16 February 1961 (16.02.61) Whole document	1,3,4
X	US,A,1352299 (MERTZ), 7 September 1920 (07.09.20) Whole document	1,2,6
X Y	AU,B,4956/37 (107209) (BEASLEY), 27 April 1939 (27.04.39) Whole document Lid 24	1,2,3,4,11 11
X Y	AU,B,15148/52 (160671) (ZARGES), 5 March 1953 (05.03.53) Whole document Cover 14	1,2,3,4,11 11
X Y	AU,A,21173/35 (SUMMERS), 13 February 1936 (13.02.36) Whole document Fig 7. Lid 18	1,2,3,4,11 11
X	AU,A,14715/70 (TECHNIFIL), 11 November 1971 (11.11.71) Figs. 1 to 6	1,9,10,12
X	AU,A,49913/72 (CYCLONE COMPANY OF AUSTRALIA LTD.), 13 June 1974 (13.06.74) Figs. 1 to 19	1,10
X	AU,A,16662/83 (FOLLEY), 12 January 1984 (12.01.84) Whole document	1,2,10,11,12
X	DE 912794 (SEBY), 3 June 1954 (03.06.54) Whole document	1,10,12,13
X	AU,A,11697/76 (GRASSO) 8 September 1977 (08.09.77) Whole document. Catch 30.	1,3,4,5,6,10

This Annex lists the known "A" publication level patent family members relating to the patent documents cited in the above-mentioned international search report. The Australian Patent Office is in no way liable for these particulars which are merely given for the purpose of information.

Patent Document Cited in Search Report		Patent Family Member					
AU	85420/91	WO	9205078				
AU	19338/70						
AU	45117/85						
DE	4025957						
AU	20527/88						
AU	34800/89	EP	366780	JP	3502568	NZ	229133
		US	5056667	WO	8911422	ZA	8903635
AU	19479/88	BE	1000786	DE	3820999	ES	2009005
		FR	2617130	GB	2206098	LU	87243
		NL	8801600	WO	8810223	ZA	8804207
AU	14715/70						
AU	49913/72						
AU	16662/83	GB	2123789	NZ	204840		

END OF ANNEX