BLOCK FOR REFRACTORY LININGS

Filed July 5, 1967 3 Sheets-Sheet 1

FIG. 1

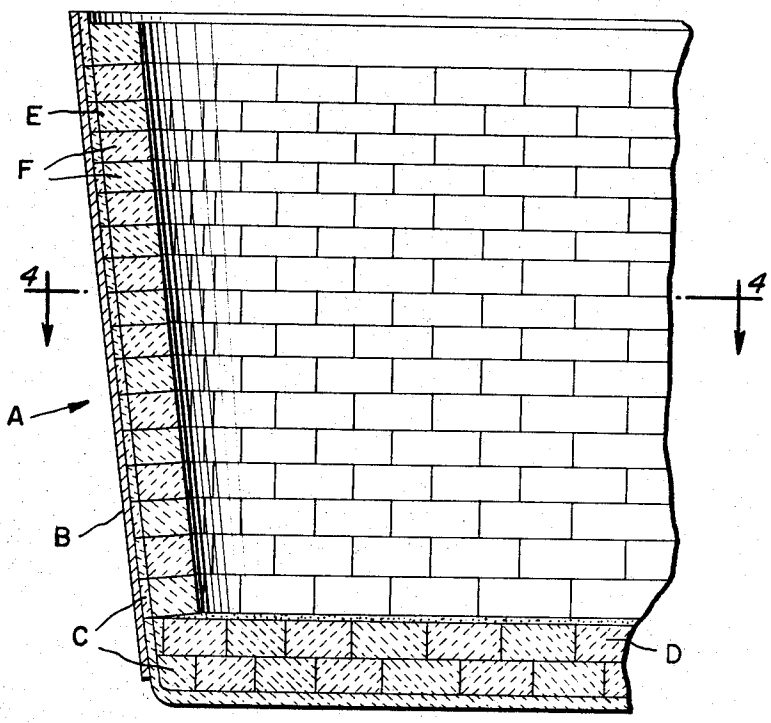

FIG. 2

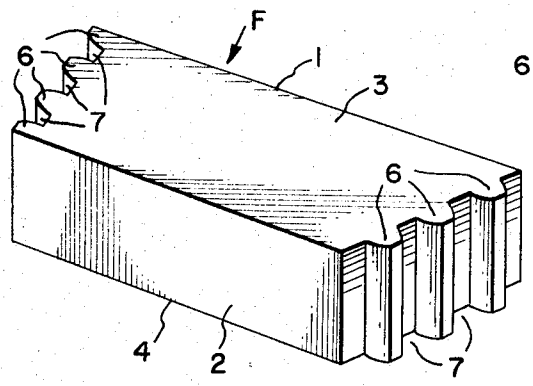

FIG. 3

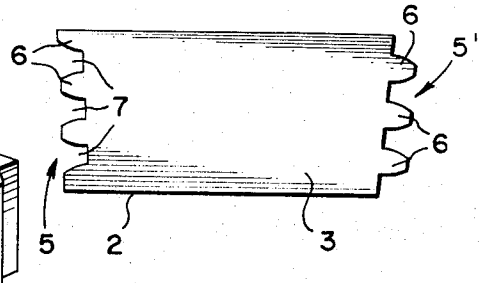

INVENTOR
MYRON COLEMAN

BY Emory L. Groff Jr.
ATTORNEYS

BLOCK FOR REFRACTORY LININGS

Filed July 5, 1967

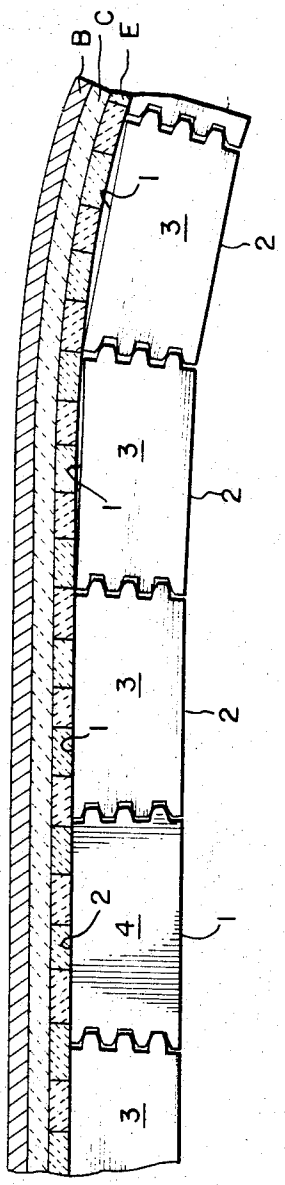

FIG. 4

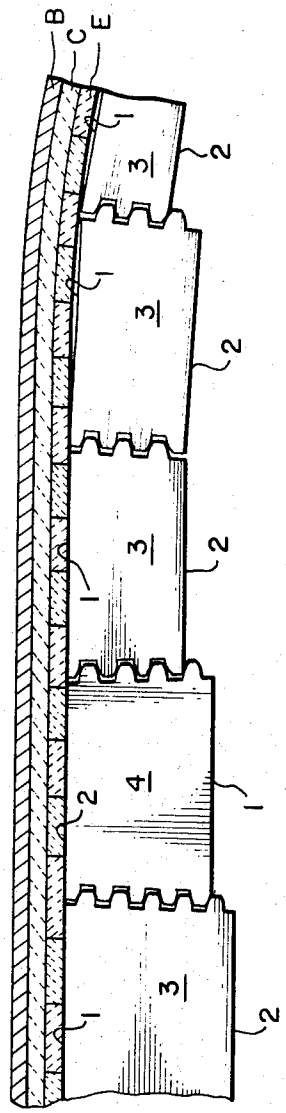

FIG. 5

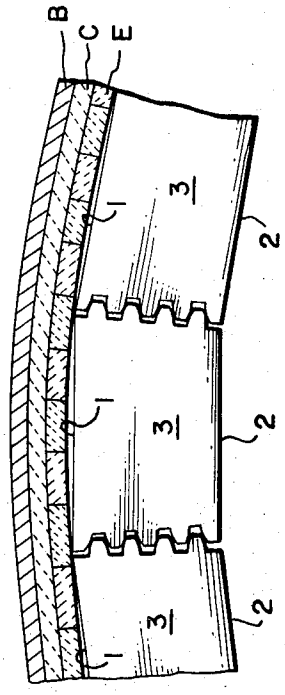

FIG. 6

INVENTOR
MYRON COLEMAN
BY Emory L. Groff Jr.
ATTORNEYS

FIG. 7

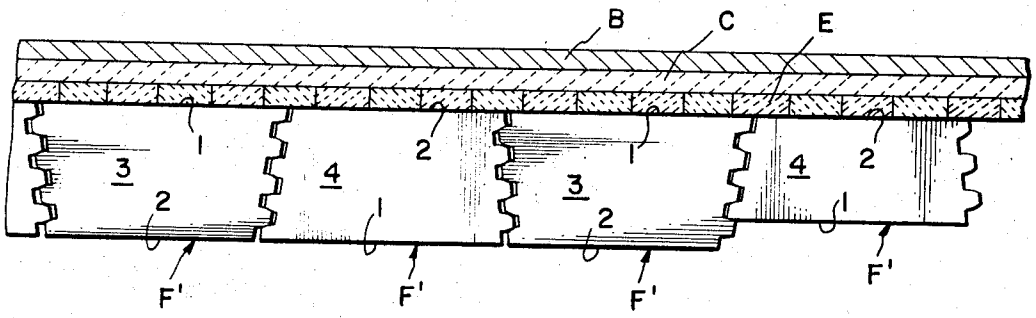

FIG. 8

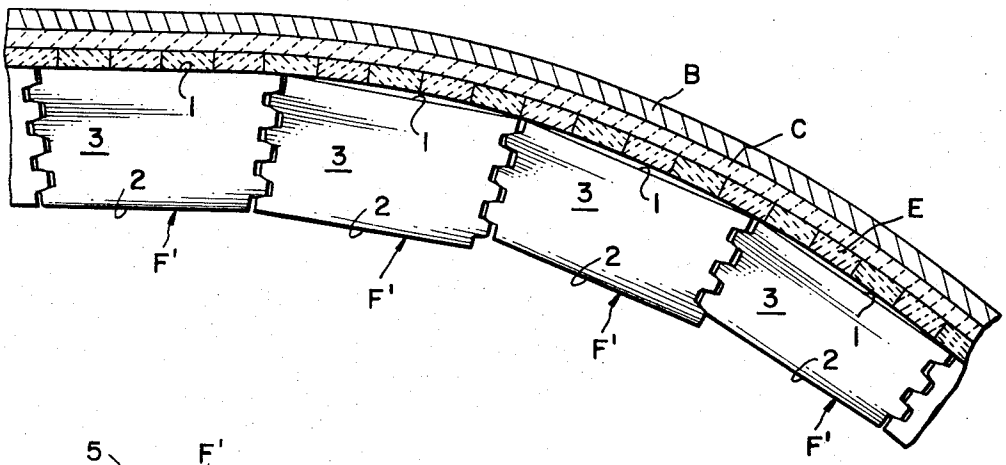

FIG. 9

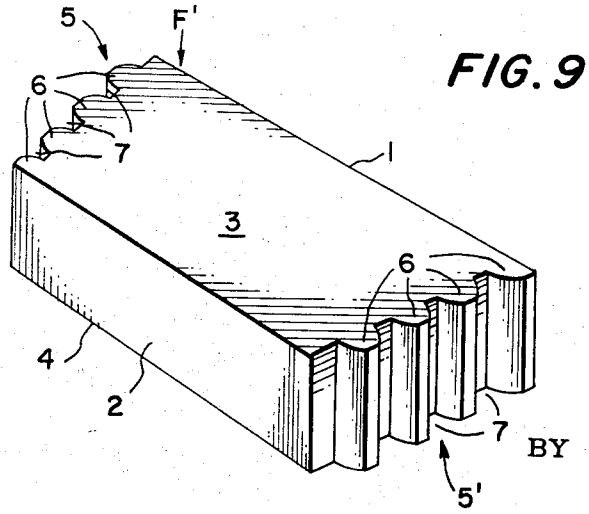

INVENTOR
MYRON COLEMAN

BY Emory L. Groff Jr.
ATTORNEYS

United States Patent Office

3,394,521

Patented July 30, 1968

1

3,394,521

BLOCK FOR REFRACTORY LININGS

Myron Coleman, R.D. 4, Irondale, Ohio 43932

Continuation-in-part of application Ser. No. 315,473, Oct. 11, 1963. This application July 5, 1967, Ser. No. 651,267

3 Claims. (Cl. 52—574)

ABSTRACT OF THE DISCLOSURE

A refractory ladle lining block in the shape of an isosceles trapezoid which has a plurality of alternately disposed ribs and recesses on each of its tapered end walls for interlocking engagement with related ribs and recesss on similar adjacent blocks when said blocks are laid in a course of blocks to form a lining in a ladle for molten steel. The interlocking ribs provide a plurality of barriers against the penetration of molten steel to the ladle wall.

This application is a continuation-in-part of my copending application Ser. No. 315,473, filed Oct. 11, 1963, and now abandoned which is a continuation-in-part of my application Ser. No. 305,498, filed Aug. 29, 1963, now abandoned.

This invention relates to refractory blocks for use in constructing linings of ladles for molten steel and other materials and is directed to a novel construction and arrangement of the block end walls in combination with the overall configuration of the block.

More particularly, the invention is directed to the end structure of the blocks whose sides, that is, the front and back faces, are of different lengths and includes providing a special arrangement of spaced vertical ribs in each end of the block. These ribs may be applied to blocks of trapezoidal shape or to blocks whose end surfaces are concave-convex.

In constructing a lining, it is desirable to have the working lining against or as close as possible to the safety lining both to conduct some heat to the shell to prevent excessive heat in the lining and it is also desirable to eliminate any voids which the molten steel might penetrate and even cause displacement of the block.

In the present construction of ladle linings, a gap between adjacent end portions of the blocks may occur due to the configuration of the ladle which has conically curved side walls or may have straight side walls between conically curved ends. It is the varying diameter of the ladle which makes it difficult to obtain the desired fit of the blocks now in use when turning a curve. Also, irregularities in the shell and/or safety lining make a lining of flexible diameter or arc desirable.

Accordingly, the primary object of this invention is to eliminate or overcome these undesirable conditions by providing a series of interlocking ribs at each of the ends of the blocks, whereby the gap or passage normally occurring between adjacent abutting ends of the blocks is interrupted to prevent the molten steel and/or slag from penetrating the lining.

The spacing and width of the ribs is proportionate to the width of the brick or the thickness of the lining. The purpose of this relative width of the ribs to the width of the block is important in situations where it is necessary to use blocks of varying width to conform to the contour of the lining, and to permit changes in thickness of the lining as needed for the particular service encountered. The relative width of the ribs to the width of the block is also important in that the blocks may be inverted or reversed alternately, which permits facility in assembly to form a straight side. To turn a curved

2

portion of a ladle, the blocks are all placed with their long and short sides in the same position relative to the inside of the ladle. In order to tighten up a curve or to break a joint, a half-block may be used, which except for its length is a replica of the primary block. By half-block is meant that the length of the long side of the block is approximately one-half of the length of the long side of the average block and the shorter side is less than the shorter side of the whole block by the same distance as the longer side is shorter, whereas the other proportions such as the relative length of the front and back faces and the spacing and the width of the ribs is substantially the same.

The provision of the ribbed end portions for the blocks is equally adaptable for bloating or non-bloating types of refractory blocks or ladle brick.

In order to provide more facile assembly of the blocks, the edges of the ribs might advantageously be bevelled or radiused so as to provide greater flexibility of assembly. Also, for ease of manufacture and stability of shipment, the depth of the rib should not exceed approximately three-fourths of its width.

An example of the dimensions of a typical block would be as follows: For a block 4.2 inches wide, the ribs could be approximately 0.6 inch wide. The recesses between the ribs are approximately 0.45 inch deep and 0.60 inch wide with a 10° taper extending about .3 inch from the edge of the ribs to permit easy fitting of related ribs and recesses when the blocks are assembled. The dimensions of the long and short faces or sides of the block would be approximately 8 inches for the short side and 8.625 inches for the long side. As the width of the block increases, the difference between the short and long sides would also increase proportionately. In such a case, the dimensions of the teeth and recess remain the same but one additional tooth and/or one additional recess is added for the next wider brick to produce that section of the ladle lining which is desired to be thicker. In practice, the lining is made thinner as it progresses upwardly from the bottom of the ladle. The increment between various thicknesses of the ladle lining is equal to the thickness of one tooth or the thickness of one recess or the sum of one or more of each. To attain the desired interlocking engagement, the ribs at the ends of the blocks are staggered axially relative to one another. It is understood that the dimensions given are for purposes of illustration only and do not limit the scope of the invention.

The foregoing construction has a distinct advantage over blocks now in use in that, due to the arrangement of the ribs and recesses, there are always several barriers to the penetration of molten steel to the safety lining. For instance, the portion of each interlock parallel to the wall will act as a barrier even though the portions perpendicular to the wall are separated.

With the above and other objects in view, which will more readily appear as the nature of the invention is better understood, the invention consists in the novel construction, combination and arrangement of parts, hereinafter more fully described, illustrated, and claimed.

A preferred and practical embodiment of the invention is shown in the accompanying drawings in which:

FIGURE 1 is a vertical section partly broken away of a typical ladle embodying the blocks of the invention;

FIGURE 2 is a perspective view of a block;

FIGURE 3 is a top plan view of the block shown in FIGURE 2;

FIGURE 4 is section taken on the line 4—4 of FIGURE 1;

FIGURE 5 is a view showing transitions from courses of thick blocks to courses of thinner blocks;

FIGURE 6 is a view showing a gap on the hot metal side as for a course where the diameter of the circle to be lined is greater than the ideal or nominal diameter formed by the brick;

FIGURE 7 is a section taken through a typical ladle illustrating a modified form of block;

FIGURE 8 is a view similar to FIGURE 6 showing a gap on the hot metal side of a ladle, but illustrates the modified form of block shown in FIGURE 7;

FIGURE 9 is a perspective view of the modified form of block shown in FIGURES 7 and 8.

Similar reference characters designate corresponding parts throughout the several figures of the drawing.

Referring to the drawings in detail, FIGURE 1 illustrates a ladle A having an outer metal shell B, a refractory safety lining C in the sides and bottom, a working floor lining D and a working side lining E formed of blocks F. A typical block F in the shape of an isosceles trapezoid has front and rear faces or sides **1** and **2**, a top wall **3** and a bottom wall **4** as illustrated in FIGURES 2 and 3. The sides **1** and **2** of the block are of unequal length in that side **1** is approximately 8.625 inches, whereas side **2**, the short side, is 8 inches in length.

The end walls **5**, **5'** of the block are provided with a plurality of ribs **6** projecting perpendicularly, therefrom with recesses **7** therebetween. The end **5** of the block is provided with an even number of ribs, while the other end **5'** is provided with an odd number of ribs, which in the case of FIGURES 2 and 3 is 4 ribs and 3 ribs, respectively. The reason for this arrangement is so that the adjacent blocks in each row will have mating ends. That is to say that the desired interlock will always be obtained, regardless of whether the blocks are used for forming a straight side wall, or turning a curve at one end of the ladle. The number of ribs and recesses may vary according to the desired thickness of the block. Thus, when forming the lining of the ladle which is progressively thinner as it extends upwardly from the bottom, the increment between various thicknesses of ladle lining would be equal to the width of one rib, or one recess, or the sum of one or more or both.

The shape of the ribs **6** may be in the nature of gear teeth as shown in the drawing, or the sides of the ribs and the base of the recesses could have sharp angles. This latter arrangement would be permissible so long as the width of the recess is slightly greater than the width of the ribs to permit ready assembly. The ribs also could be tapered part, or all, of their length and a radius may be formed at the corners of the recesses for strain relief.

FIGURES 4, 5, and 6 illustrate application of the block to straight and curved portions of the ladle. When the blocks are laid along the straight wall, they are merely turned over alternately so that the long and short faces of one block are positioned next to a short and long face respectively of the next adjacent block. In other words, the long and short sides of adjacent blocks are staggered relative to one another. As the curve is approached, the blocks will be laid with their long and short faces side by side and, in certain situations, a half block may be interposed so as to tighten up a curve.

It will be noted from the drawings that when the blocks are laid so as to turn a curve, there is a discernible gap between the edges perpendicular to the safety lining, but the parallel edges of the ribs are in contact at some point with the side wall of the recess within which they are resting to effect complete closure from front face to rear face and to prevent escape of mortar or cement if used.

If desired, mortar may be placed in the gap between the perpendicular edges; however, this is not necessary with a bloating type ladle brick, i.e., one having expansion upon reheat, since due to the arrangement of the ribs and recesses, there is always a plurality of barriers to the penetration of molten steel to the safety lining. The portion of each interlock parallel to the wall acts as a barrier, even

though the portions perpendicular to the wall are separated.

In the modification shown in FIGURES 7, 8, and 9, it will be seen that the blocks F' are generally shaped similar to the form shown in FIGURES 1–6. However, the arrangement of the ribs and adjacent recesses is somewhat different. In this form, there are an equal number of ribs and recesses at the end of any one block such that there is always a rib at one side and a recess at the other side of every end of every block. The formation of the ribs and recesses at one end thereof is opposite to that at the other end thereof. In this manner, to provide for a curved arrangement such as shown in FIGURE 8, it is necessary only to turn a block 180° without having to turn the block over.

In this form, it makes no difference as to the width of the block, since a narrow block may readily be laid next to a wider block, because each of the blocks is formed with the same arrangement of ribs and recesses, or they may be used with blocks shown in FIGURES 1 through 6.

It will be apparent from the foregoing description that the invention provides an efficient refractory block for ladle linings which will prevent molten steel from penetrating the lining, and permits rapid transfer of heat from the working lining to the shell and away from the ladle to thus insure maximum lining life.

I claim:

1. A refractory block for assembly with a plurality of similar blocks in a lateral and stacked relationship to be used in constructing the working linings of ladles for molten steel and the like, which ladles include a refractory safety lining, said block comprising planar top and bottom faces, front and rear faces of unequal length, end walls of equal length symmetrically tapering toward one another from the longer of said unequal length faces to the shorter of said unequal length faces and comprising planar surfaces whereby said block defines an isosceles trapezoidal configuration as seen from the top and bottom thereof, each of said planar end walls having a plurality of equidistantly spaced ribs, each of said ribs extending substantially perpendicularly from the associated end wall, each of said ribs also extending continuously between said top and bottom faces of the block, a plurality of recesses being defined and bounded by each of said end walls and the associated ribs, said ribs and recesses being alternately disposed at each end wall of the block, and the combined width of the recesses and ribs at each end of the block being equal to the width of the associated end wall of the block, the ribs on one end wall being located opposite recesses on the other end wall, a plurality of said ribs each being symmetrically tapered from the associated end wall to a smaller dimension outwardly thereof and terminating in a flat outer end surface substantially parallel with the adjacent end wall, said block also including two ribs each of which has a configuration wherein one side thereof slopes outward from the associated end wall and the opposite side thereof is substantially flat and aligned with one of said faces of unequal length, the outer end of said last mentioned two ribs defining a flat end surface substantially aligned with the flat end surfaces of adjacent ones of said first plurality of ribs, said recesses defined by said ribs flaring outwardly from the associated end wall to a greater dimension outwardly of the associated end wall, said ribs having a width at the outer end thereof less than the width of the outer end of a recess which receives the rib, said first plurality of ribs each having a depth approximately three-fourths of the width thereof, the arrangement and spacing of said ribs permitting assembly of a plurality of blocks with the interlocking ribs in close proximity to one another even when adjacent end walls of said blocks are slightly separated and not parallel to one another thereby preventing separation of the interlocking adjacent end walls of said blocks and providing a plurality of barriers from the front to the rear of said blocks to prevent penetration of molten steel to the ladle wall when

forming, on the one hand a curverd course of blocks with the front faces of the blocks juxtaposed the refractory safety lining and when forming, on the other hand a straight course of blocks with alternate front and rear faces of the blocks juxtaposed the refractory safety lining.

2. A refractory block according to claim **1** wherein one end wall has an even number of ribs and an odd number of recesses and the opposite end wall has an odd number of ribs and an even number of recesses, whereby when forming a straight course of blocks, alternate blocks are turned over relative to one another.

3. A refractory block according to claim **1** wherein the ribs and recesses at both end walls are equal in number, whereby when forming a straight course of blocks, alternate blocks are rotated 180°.

References Cited

UNITED STATES PATENTS

1,586,194	5/1926	Gustavsen	52—575
2,818,248	12/1957	Kelsey	52—245 X
2,877,506	3/1959	Almoslino	52—574 X
3,132,447	5/1964	Hosbein	52—52.574 X
3,139,846	7/1964	Longenecker	52—589

FOREIGN PATENTS

929,841	7/1947	France.
185,817	1922	Great Britain.
521,135	5/1940	Great Britain.
635,159	4/1950	Great Britain.

FRANK L. ABBOTT, *Primary Examiner.*

ALFRED C. PERHAM, *Assistant Examiner.*