(No Model.) 2 Sheets—Sheet 1.

F. B. RAE.

TROLLEY FOR ELECTRIC RAILWAYS.

No. 421,304. Patented Feb. 11, 1890.

Fig. 1.

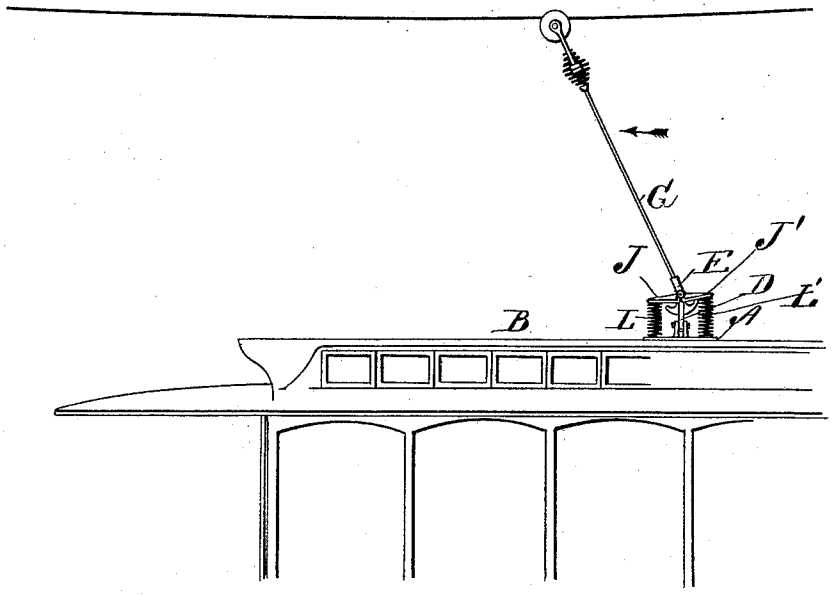

Fig. 2.

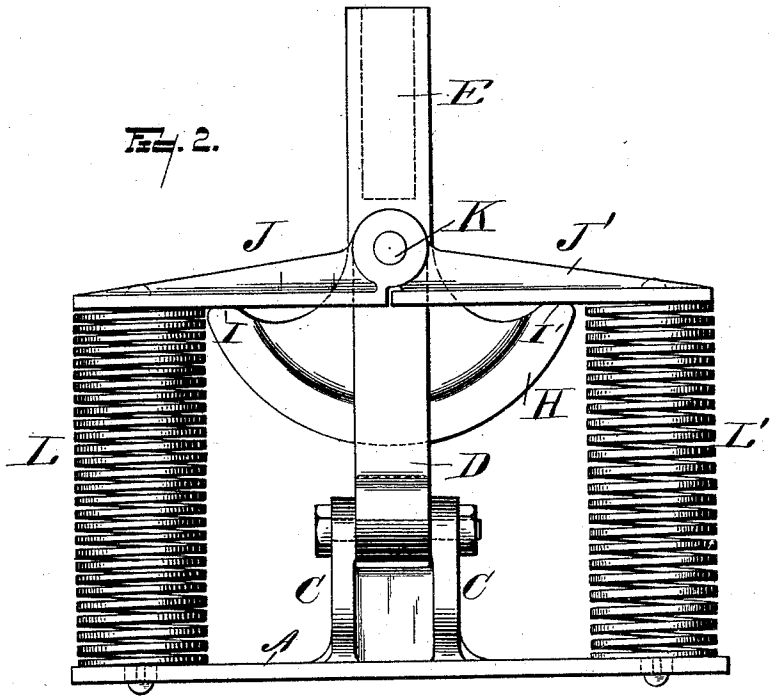

WITNESSES

Samuel E. Thomas

L. A. Palmer

INVENTOR

Frank B. Rae.

N. PETERS, Photo-Lithographer, Washington, D. C.

(No Model.) 2 Sheets—Sheet 2.

F. B. RAE.

TROLLEY FOR ELECTRIC RAILWAYS.

No. 421,304. Patented Feb. 11, 1890.

Fig. 3.

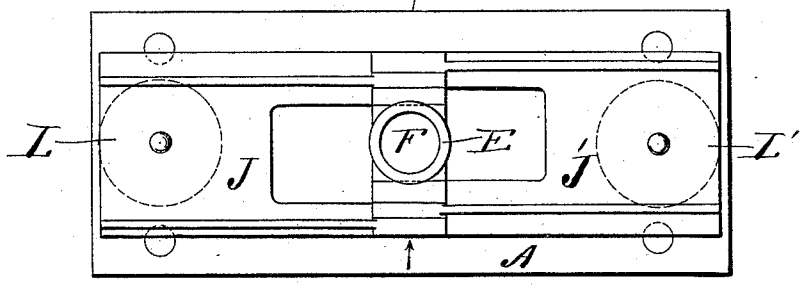

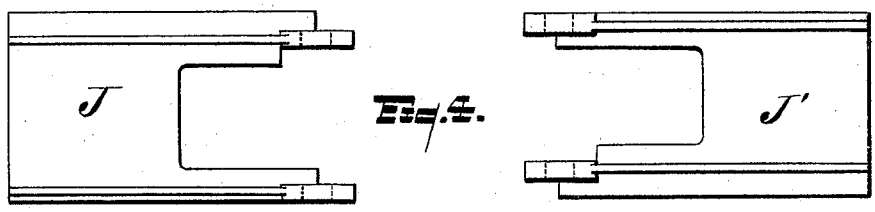

Fig. 4.

Fig. 5.

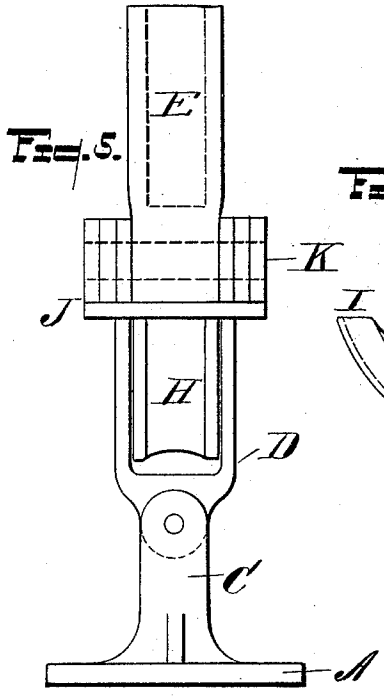

Fig. 6.

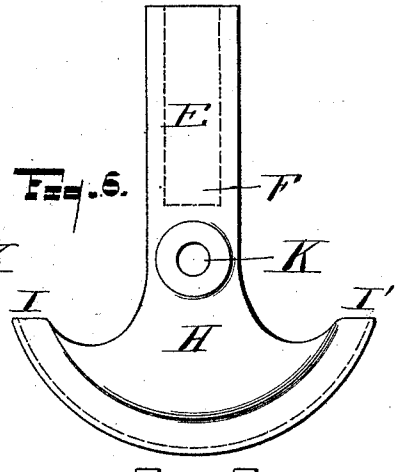

Fig. 7.

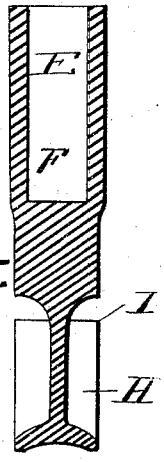

Fig. 8.

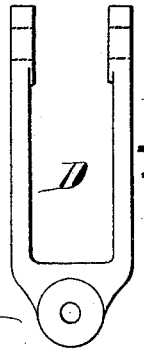

WITNESSES

Samuel E. Thomas

L. A. Palmer

INVENTOR

Frank B. Rae

N. PETERS. Photo-Lithographer, Washington, D. C.

UNITED STATES PATENT OFFICE.

FRANK B. RAE, OF DETROIT, MICHIGAN, ASSIGNOR TO THE DETROIT ELECTRICAL WORKS, OF SAME PLACE.

TROLLEY FOR ELECTRIC RAILWAYS.

SPECIFICATION forming part of Letters Patent No. 421,304, dated February 11, 1890.

Application filed June 27, 1889. Serial No. 315,709. (No model.)

To all whom it may concern:

Be it known that I, FRANK B. RAE, a citizen of the United States, residing at Detroit, in the county of Wayne and State of Michigan, have invented certain new and useful Improvements in Trolleys for Electric Railways; and I do hereby declare that the following is a full, clear, and exact description of the invention, which will enable others skilled in the art to which it appertains to make and use the same.

My invention relates to that class known as upward-pressure trolleys for suspended overhead conductors for electric railways, and particularly relates to new and improved means for mounting and supporting the trolley wheel or wheels in operative relation with the overhead conductor or conductors, whereby the traveling electrical contact is maintained perfectly irrespective of the variations or inaccuracies of the line construction.

It is well known to those experienced in the present mode of operating overhead electric railways that the chief difficulties encountered in the use of the trolley arise from imperfect alignment of the wire with the track on curves, crossings, &c. Furthermore, it is apparent that in traversing a well-defined curve the car to which the trolley is attached will be in a different horizontal and vertical plane from the trolley, and consequently the support for the latter will extend off in an oblique lateral direction from the car, thus rendering it necessary in practice to provide a flexible connection between the trolley wheel or wheels and the top of the car, which will permit a universal swing of the trolley-support. Again, it is manifest that on curves of the character mentioned the trolley-wheel will, if rigidly joined to a rigid support, be running off from a true perpendicular line and constantly tending to ride off the wire. Consequently to provide a construction of trolley and trolley-support which will be operative and reliable under all adverse conditions is the object of my invention.

My invention consists in certain details of construction, arrangement, and combination of parts, all of which will be more fully described hereinafter, and the specific points of novelty in which will be particularly designated in the appended claims.

Referring to the accompanying drawings, Figure 1 is a view in side elevation, showing my invention complete. Fig. 2 is an enlarged side elevation illustrating the mode of connecting the base of the trolley-pole with the top of the car. Figs. 3, 4, 5, 6, 7, and 8 are details of the several parts shown in Fig. 2.

Like letters of reference mark the same or corresponding parts in the several views of the drawings.

A represents a base or bed plate, secured to the top of the car B in a suitable manner, and having the two upright parallel lugs C C formed integral therewith, and serving as a bearing for the hinge-joint D, which connects the base-plate A with the pole-socket E and permits a lateral or side oscillation of the pole. The pole-socket E is provided with a circular interior recess F at its upper end, designed to receive and hold the lower end of the pole G, whereas the lower end of the pole-socket is formed into a sector-shaped plate H, having the two limiting-extremities I I′ arranged to engage with the two hinged plates J J′. The socket E is trunnioned on the short shaft K in an opposite direction to the hinge D, so that the same has practically a universal swing. The shaft K is journaled at its extremities in the circular eye of the plates J J′, and is held against displacement by nuts secured on its ends on the outside of the plates J′. Thus it will be seen that the socket E and the plates J J′ are mutually hinged upon the shaft K.

L L′ respectively indicate two coiled helical or spiral springs placed, as shown, intermediate of the extremities of the plates J J′ and the base-plate A, one on each side, the upper extremity of both springs being attached to its respective plate J or J′, while both lower ends are attached to the base-plate A on respective sides of the same. From this description it will be understood that the springs L L′ support and uphold the plates J J′ normally in a plane at right angles with the perpendicular line of the pole. The plates J J′ are so arranged and constructed as to prevent their falling downwardly farther than

the horizontal position shown in Fig. 2, but are free to yield upwardly when actuated by the impact of the extremities of the sector-plate H. In other words, the plates J J′ are connected by a knuckle-joint with the shaft K and pole-socket E.

The pole G is socketed firmly in the recess in the pole-socket E, and carries at its upper extremity a trolley-wheel connected therewith by a new and improved spring-connection, which is shown herein, but not described or claimed. Now, referring to Fig. 1, it will be seen that if the pole is deflected in the direction of the feathered arrow the hinged arm J′ will yield upwardly to the greater pressure of the spring L′, whereas the arm J will maintain its angle of relation to the pole and will in its oblique upward movement elongate the spring L, which in turn will gradually yield to the force of impact of the sector-extremity I against the arm J. Therefore it is clear that when the descent of the wire overhead compels the inclination of the pole in the direction just described the trolley-wheel will still be maintained with a yielding increasing spring-pressure by spring L. Should the pole G in traversing a curve be deflected in the direction of the unfeathered arrow, the hinge D permitting said deflection, both springs L L′ will be elongated and will preserve the spring-contact of the trolley with the wire. In brief, no matter what direction the pole assumes, the spring L or L′, or both, will be called into action to maintain the pressure of the trolley against the wire, and I have found by actual experience that the hinged joint D and the trunnion on shaft K will give all the liberty of swing that is needed for the pole G.

Having thus fully and accurately described my invention, what I claim as new, and desire to secure by Letters Patent, is—

1. In a trolley for electric railways, the combination, with a trolley-pole flexibly jointed at its base, of two hinged arms trunnioned together and extending in opposite directions, a spring between the extremity of each arm and a stationary part, and actuating means on the trolley-pole for moving said hinged arms against the tension of the springs.

2. In a trolley for electric railways, the combination, with a trolley-pole hinged at its base to a suitable stationary support, of two diverging hinged arms, each controlling the tension of a spring and the consequent pressure of said spring against the trolley-pole, and means attached to the trolley-pole for varying the tension of either spring by moving to a greater or less degree the hinged arm connected with the spring.

3. In a trolley for an electric railway, the combination, with a base-plate, of a pole-socket hinged to a base-plate in one direction, and trunnioned on a supplemental support in another direction, two spring-actuated arms controlling the pressure exerted against a trolley-pole, a trolley-pole supported by said socket, and a cam-acting lever arranged to increase the tension of one spring-arm without increasing that of the other.

In testimony whereof I have hereunto set my hand this 18th day of June, A. D. 1889.

FRANK B. RAE.

Attest:
F. L. FREEMAN,
S. L. JOHNSON.