(12) INTERNATIONAL APPLICATION PUBLISHED UNDER THE PATENT COOPERATION TREATY (PCT)

(19) World Intellectual Property Organization
International Bureau

(43) International Publication Date
27 December 2013 (27.12.2013)

WIPO | PCT

(10) International Publication Number
WO 2013/191601 A1

(51) International Patent Classification:
A61F 13/84 (2006.01) *A61F 13/535* (2006.01)
A61F 13/47 (2006.01)

(21) International Application Number:
PCT/SE2012/050682

(22) International Filing Date:
20 June 2012 (20.06.2012)

(25) Filing Language: English

(26) Publication Language: English

(71) Applicant *(for all designated States except US)*: **SCA HYGIENE PRODUCTS AB** [SE/SE]; S-405 03 Göteborg (SE).

(72) Inventor; and
(75) Inventor/Applicant *(for US only)*: **ELVERT, Lilian** [SE/SE]; Dalavägen 85, S-438 92 Härryda (SE).

(74) Agent: **ALBIHNS.ZACCO AB**; Box 142, S-401 22 Göteborg (SE).

(81) Designated States *(unless otherwise indicated, for every kind of national protection available)*: AE, AG, AL, AM, AO, AT, AU, AZ, BA, BB, BG, BH, BR, BW, BY, BZ, CA, CH, CL, CN, CO, CR, CU, CZ, DE, DK, DM, DO, DZ, EC, EE, EG, ES, FI, GB, GD, GE, GH, GM, GT, HN, HR, HU, ID, IL, IN, IS, JP, KE, KG, KM, KN, KP, KR, KZ, LA, LC, LK, LR, LS, LT, LU, LY, MA, MD, ME, MG, MK, MN, MW, MX, MY, MZ, NA, NG, NI, NO, NZ, OM, PE, PG, PH, PL, PT, QA, RO, RS, RU, RW, SC, SD, SE, SG, SK, SL, SM, ST, SV, SY, TH, TJ, TM, TN, TR, TT, TZ, UA, UG, US, UZ, VC, VN, ZA, ZM, ZW.

(84) Designated States *(unless otherwise indicated, for every kind of regional protection available)*: ARIPO (BW, GH, GM, KE, LR, LS, MW, MZ, NA, RW, SD, SL, SZ, TZ, UG, ZM, ZW), Eurasian (AM, AZ, BY, KG, KZ, RU, TJ, TM), European (AL, AT, BE, BG, CH, CY, CZ, DE, DK, EE, ES, FI, FR, GB, GR, HR, HU, IE, IS, IT, LT, LU, LV, MC, MK, MT, NL, NO, PL, PT, RO, RS, SE, SI, SK, SM, TR), OAPI (BF, BJ, CF, CG, CI, CM, GA, GN, GQ, GW, ML, MR, NE, SN, TD, TG).

Published:

— *with international search report (Art. 21(3))*

(54) Title: FOLDED ABSORBENT ARTICLE

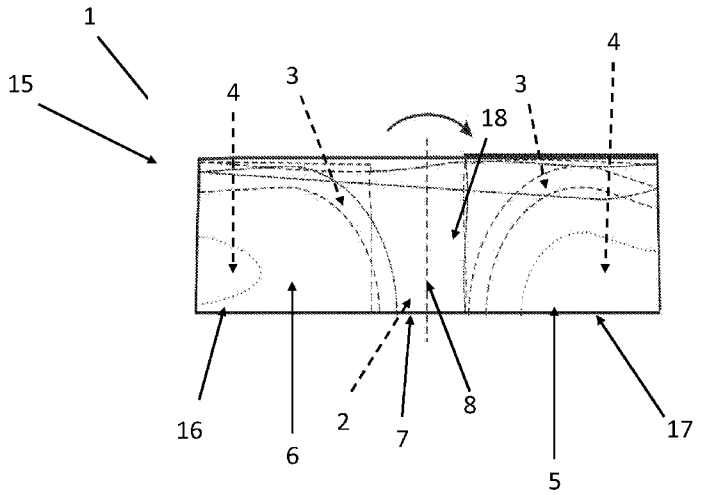

Fig. 3

(57) Abstract: The invention relates to a folded absorbent article (1) such as a sanitary napkin, incontinence pad or panty liner. The absorbent article (1) comprises at least a liquid permeable top sheet (2), a liquid impermeable back sheet (3) and an absorbent core (4) placed between the top sheet (2) and the back sheet (3). The absorbent article (1) has in an unfolded state an extent in a plane in a longitudinal direction and a lateral direction and a thickness perpendicular to said plane. The absorbent article (1) comprises in an unfolded state in the longitudinal direction a front section (5), a rear section (6) and between them a central section (7).The absorbent article (1) has in an unfolded state a transverse centre line (8) and a longitudinal centre line (9).The rear section (6) and the front section (5) of the absorbent article (1) are folded towards the transverse centre line (8) thereby forming a firstly folded absorbent article (12). The firstly folded absorbent article (12) is folded essentially along the longitudinal centre line (9) thereby forming a secondly folded absorbent article (15). The front section (5) and the rear section (6) of the absorbent article (1) are folded such that the absorbent core (4) in the front section (5) and the rear section (6) do not mutually overlap when forming the firstly folded absorbent article (12).The secondly folded absorbent article (15) is transversely folded in a region (18) where the absorbent core (4) of the front section (5) and the rear section (6) is lacking, thereby forming a thirdly folded absorbent article (19).

WO 2013/191601 A1

TITEL

Folded absorbent article

Technical Field

The invention relates to a folded absorbent article such as a sanitary napkin, incontinence pad or panty liner. The absorbent article comprises at least a liquid permeable top sheet, a liquid impermeable back sheet and an absorbent core placed between the top sheet and the back sheet. The absorbent article has in an unfolded state an extent in a plane in a longitudinal direction and a lateral direction and a thickness perpendicular to said plane. The absorbent article comprises in an unfolded state in the longitudinal direction a rear section, a front section and between them a central section. The absorbent article has in an unfolded state a transverse centre line and a longitudinal centre line. The rear section and the front section of the absorbent article are folded towards the transverse centre line thereby forming a firstly folded absorbent article; the firstly folded absorbent article is folded essentially along the longitudinal centre line thereby forming a secondly folded absorbent article.

Background Art

Folded absorbent articles for use in packages are known in the art. The absorbent articles usually have to be folded or otherwise compressed in order to obtain packaging sizes that are not too big to be able to store or carry. The absorbent articles are further often individually packaged. The choice of how to fold or compress the article thus varies depending on the type of product, and if the product is equipped with for instance wings or elastic.

A common way of folding an absorbent article is to fold a front part over a central part and there after folding a rear part over the front part and the central part. A problem with this type of folded article is that the number of layers stacked on top of each other can make it difficult to further reduce the size of the article and thus the package if desirable thus limiting the size of the package. Such an article may also be too big to hide in a closed hand for privacy purposes.

There is thus a need for an improved folded absorbent article.

Summary of Invention

The object of the present invention is to provide an inventive folded absorbent article where the previously mentioned problems are avoided. This object is achieved by the features of the characterising portion of claim 1.

The invention relates to a folded absorbent article such as a sanitary napkin, incontinence pad or panty liner. The absorbent article comprises at least a liquid permeable top sheet, a liquid impermeable back sheet and an absorbent core placed between the top sheet and the back sheet. The absorbent article has in an unfolded state an extent in a plane in a longitudinal direction and a lateral direction and a thickness perpendicular to said plane. The absorbent article comprises in an unfolded state in the longitudinal direction a rear section, a front section and between them a central section. The absorbent article has in an unfolded state a transverse centre line and a longitudinal centre line. The rear section and the front section of the absorbent article are folded towards the transverse centre line thereby forming a firstly folded absorbent article; the firstly folded absorbent article is folded essentially along the longitudinal centre line thereby forming a secondly folded absorbent article. The front section and the rear section of the absorbent article are folded such that the absorbent core in the front section and the rear section do not mutually overlap when forming the firstly folded absorbent article The secondly folded absorbent article is transversely folded in a region where the absorbent core of the front section and the rear section is lacking, thereby forming a thirdly folded absorbent article.

An advantage of a folded absorbent article according to the invention is that the size of the folded article can be reduced thereby making it possible to have an article that is both easier to package and for a user to carry with them. The smallness of the article allows the article to be easily carried in a purse or even a pant pocket without being easily visible. This smallness is achieved by folding the article three times as described above.

When forming the firstly folded absorbent article the front section and the rear section are folded towards each other. By folding the article such that the absorbent core in the front section and the rear section do not mutually overlap a central region of the firstly folded article is made up of only one layer of the absorbent core, i.e. the absorbent core of the central section. After the firstly folded absorbent article is folded a second time along the longitudinal centre line to form the secondly folded article a corresponding central region of the secondly folded article only comprises two layers of the absorbent core, i.e. the absorbent core of the central section folded on top of itself. This enables a third folding of the secondly absorbent article in a region where the absorbent core of the front section and the rear section, and thereby the front part and the rear part of the secondly folded absorbent article, is lacking, thereby forming a thirdly folded absorbent article. The number of layers of the absorbent core in the front part and the rear part of the secondly folded absorbent article comprises four layers of the absorbent core. If the absorbent core of the front section and the

rear section overlaps, at least a portion of the firstly folded absorbent article would have comprised up to three layers of the absorbent core stacked on top of each other, namely the absorbent core of the front section, the rear section and the central section. After the folding of the firstly folded absorbent article into the secondly folded absorbent article the front part and the rear part would comprise six layers stacked on top of each other. The multiple layers of absorbent core on top of each other would make the third fold difficult or even impossible as the thickness of the resulting thirdly folded article if the absorbent core of the front section, the rear section and the central section would have been stacked on top of each other.

Although the absorbent core in the front portion and the rear portion of the firstly folded absorbent article do not mutually overlap, the back sheet and the top sheet and may overlap as the thickness of each of these layers are that much thinner than the absorbent core. Having the back sheet and top sheet mutually overlap thus does not hinder the third fold from being performed.

The feature core in this invention means a liquid absorbing layer located between the top sheet and the back sheet. The core typically comprises absorbent material. Examples of commonly-occurring absorbent materials are cellulosic fluff pulp, tissue layers, highly-absorbent polymers (so called superabsorbents), absorbent foam materials, absorbent nonwoven materials or the like. It is common to combine cellulosic fluff pulp with superabsorbents in an absorbent body. It is also common to have additional layers of different material with different properties with respect to liquid receiving capacity, liquid distribution capacity and storage capacity. The thin absorbent cores, which are common in for example sanitary napkins and incontinence guards, often comprise a compressed mixed or layered structure of cellulosic fluff pulp and superabsorbent. The absorbent article may comprise one or more of said additional layers which are designed to improve the handling of bodily waste. Such additional layers are arranged to be stacked on top of the absorbent core and are designed to receive a large amount of liquid in a short space of time and distribute it. They may include so-called transfer, distribution, surge or acquisition layers, and are usually located between the top sheet and the absorbent core. One or more additional layers may also for some applications be placed under the absorbent core. The top sheet and back sheet generally have a similar extension in the plane of the article, while the absorbent core has an extension which is somewhat smaller. The additional layer may have an extension similar to the core but may also extend beyond the core. The top sheet and back sheet may be joined to one another around the periphery of the absorbent core, so that the core is enclosed within the envelope formed by the top sheet and the back sheet. The absorbent

core is at least located in the central section of the article, and generally also extends somewhat into the front section and rear section.

The front section and the rear section of the firstly folded absorbent article may be arranged such that they do not mutually overlap. In order to even better be able to form the thirdly folded article, the front section and the rear section may be arranged to not overlap at all when forming the firstly folded article. The secondly folded absorbent article may thus be transversely folded in a region where the front section and the rear section is lacking, thereby forming a thirdly folded absorbent article. This ensures that the region where the fold forming the thirdly folded absorbent article is performed only comprises two layers of top sheet, two layers of back sheet and two layers of the core, i.e. the core of the central section folded over itself. The result is that the fold when forming the thirdly folded absorbent article is easier to perform.

When performing the first fold of the absorbent article the front section and the rear section of the firstly folded absorbent article may be folded over the central section such that the top sheet of the front section and the top sheet of the rear section face the top sheet of the central section. This leads to that the back sheet encloses the firstly folded article thereby protecting the top sheet and core. When forming the secondly folded article the secondly folded article may be formed either with a valley fold or a mountain fold. A valley fold means that when looking at the firstly folded article from above the crease of the fold is at the bottom and the firstly folded article is folded into itself, or upwards. A mountain fold means that the crease of the fold is at the top and the firstly folded article is folded downwards. In both cases the result is that the back sheet of the secondly folded article faces itself. The difference between the folds is that when using a valley fold a depression is formed longitudinally in the central section of the article when it is unfolded while when using a mountain fold a hump is formed longitudinally in the central section of the article when it is unfolded. This leads to that articles with different characteristics can be made simply by choosing the nature of the fold when forming the secondly folded article. The depression or hump in the central section is formed either so that only the top sheet of the absorbent article forms the hump or that the depression or hump is formed throughout the entire thickness of the absorbent article.

When performing the first fold of the absorbent article the front section and the rear section may be folded over the central section such that the back sheet of the front section and the back sheet of the rear section face the back sheet of the central section. This leads to that the top sheet encloses the firstly folded article. The firstly folded absorbent article may be folded along the longitudinal centre line in a valley fold or mountain fold such that the top

sheet of the firstly folded absorbent article faces itself when forming the secondly folded absorbent article. The same forming of a depression or hump in the central section when forming the secondly folded article as described above applies.

Alternatively, the firstly folded article may be formed by folding the front section and the rear section over the central section such that the back sheet of the front section faces the back sheet of the central section and the top sheet of the rear section faces the top sheet of the central section. The opposite is of course also possible.

The absorbent article may comprise wings. The wings may be folded over the front section and the rear section of the firstly folded article. The wings are arranged along the longitudinal sides of the absorbent article and are used to fasten the absorbent article to underwear of a user. The wings may take any shape known in the art. The wings may be folded over the front section and the rear section of the firstly folded article such that the wings at least partially mutually overlap. The fact that the wings are also thin in comparison to the absorbent core makes it possible to form the thirdly folded article although additional material of the wings is placed in the region where the absorbent core is lacking or alternatively where the front section and the rear section is lacking.

The back sheet of the absorbent article may further comprise fastening means for attaching the back sheet to the underwear of a user. The wings may also comprise similar fastening means as the back sheet for attaching to the underwear of a user. The fastening means of both the back sheet and the wings may be covered to hinder unwanted attachment of the fastening means. At least part of the wings may be fastened to the back sheet of the firstly folded absorbent article after the wings are folded over the front section and the rear section of the firstly folded article. The firstly folded article is there after folded as described above. The fastening means ensure that the wings stay in place in case the article is handled excessively by for instance having it in a purse or a pant pocket before it is opened. The fastening means of both the back sheet and the wings can be adhesive or hook-and-loop type fastener. In case the fastening means of the back sheet are of hook-and-loop type the hooks are intended to attach to for instance a non-woven surface of the wings functioning as the loops. As an alternative the wings may be folded over the central section of the absorbent article before the front section and the rear section are folded to form the firstly folded absorbent article. The fastening means on the wings are in this case preferably covered.

The invention also relates to a packaging unit comprising at least one absorbent article according to any one of the above mentioned aspects. A packaging unit comprising folded absorbent articles according to the invention may have small outer measures while at the same time holding the same amount of articles as before.

The invention further relates to a method for folding an absorbent article such as a sanitary napkin, incontinence pad or panty liner. The absorbent article comprises at least a liquid permeable top sheet, a liquid impermeable back sheet and an absorbent core placed between the top sheet and the back sheet. The absorbent article having an extent in a plane in a longitudinal direction and a lateral direction and a thickness perpendicular to said plane. The absorbent article comprises in the longitudinal direction a rear section, a front section and between them a central section. The absorbent article has a transverse centre line and a longitudinal centre line. The method comprises:

- folding the front section and the rear section over the central section such that the absorbent core in the front section and the rear section do not mutually overlap thereby forming a firstly folded absorbent article;
- folding the firstly folded absorbent article essentially along the longitudinal centre line thereby forming a secondly folded absorbent article;
- folding the secondly folded absorbent article in a region where the absorbent core of the front section and the rear section is lacking, thereby forming a thirdly folded absorbent article.

The method may further comprise:

- folding the front section and the rear section over the central section such that the front section and the rear section do not mutually overlap thereby forming a firstly folded absorbent article.

The method may further comprise:

- folding the front section and the rear section over the central section such that the top sheet of the front section and the rear section face the top sheet of the central section when forming the firstly folded absorbent article.

The method may further comprise:

- folding the firstly folded absorbent article along the longitudinal centre line with a valley fold or mountain fold such that the back sheet of the firstly folded absorbent article faces itself when forming the secondly folded absorbent article.

The method may further comprise:

- folding the front section and the rear section over the central section such that the back sheet of the front section and the rear section face the back sheet of the central section when forming the firstly folded absorbent article.

The method may further comprise:
- folding the firstly folded absorbent article along the longitudinal centre line with a valley fold or mountain fold such that the top sheet of the firstly folded absorbent article faces itself when forming the secondly folded absorbent article.

When the absorbent article comprises wings the method may further comprises:
- folding the wings over the front section and the rear section of the firstly folded article.

The method may further comprise:
- folding the wings over the front section and the rear section of the firstly folded article such that the wings at least partially overlap.

The back sheet of the absorbent article may comprise fastening means. The method may then comprise:
- fastening at least part of the wings to the back sheet of the absorbent article after the wings are folded over the front section and the rear section of the firstly folded article.

The advantages of the method are the same as described above in conjunction to the absorbent article itself.

Brief Description of Drawings

Figure 1 schematically shows an absorbent article according to the invention before it is folded a first time;

Figure 2 schematically shows a firstly folded absorbent article according to the invention;

Figure 3 schematically shows a secondly folded absorbent article according to the invention;

Figure 4 schematically shows a thirdly folded absorbent article according to the invention;

Figure 5 schematically shows a cross section of an unfolded absorbent article according to the invention.

Detailed Description of Drawings

Figure 1 schematically shows an absorbent article 1 according to the invention before it is folded a first time. The absorbent article 1 comprises a liquid permeable top sheet 2, a liquid impermeable back sheet 3 and an absorbent core 4 placed between the top sheet 2 and the back sheet 3. The absorbent article 1 having in an unfolded state an extent in a plane in a longitudinal direction and a lateral direction and a thickness perpendicular to said plane. The absorbent article 1 comprises in an unfolded state in the longitudinal direction a front section 5, a rear section 6 and between them a central section 7. The absorbent article 1 comprises in an unfolded state a transverse centre line 8 and a longitudinal centre line 9.

The extent of the core 4 is indicated in figure 1 and the following figures by a dotted line. As can be seen the core 4 has a different extension in the rear section 6 than in the front section 5. This is not a necessary feature and the core 4 may be symmetrical in both the rear section 6 and the front section 5. A description of the particular core illustrated in figure 1 can for instance be found in WO 02/085269, WO 02/085270, WO 02/087483, WO 02/087484, WO 03/047484 and WO 03/059222.

Figure 1 further shows an additional layer 10. The additional layer 10 has an extension greater than the core 4 but smaller than the top sheet 2 and back sheet 3. The extension of the additional layer 10 is meant as an illustration only and is not to be seen as limiting to the invention. Figure 1 shows how the rear section 6 and the front section 5 are supposed to be folded to form a firstly folded absorbent article (shown in figure 2). Figure 1 shows the case where the rear section 6 and the front section 5 are folded inwards and upwards towards a fictional viewer looking down at the absorbent article 1. The fold lines are merely to illustrate an approximate location of where the fold takes place.

The absorbent article 1 may comprise a protective cover 11 covering the back sheet 3. The back sheet 3 may comprise adhesives or hooks for fastening the absorbent article 1 to the underwear of a user or to secure wings (not shown) to the back sheet 3 before use of the absorbent article 1.

Figure 2 schematically shows a firstly folded absorbent article 12 according to the invention. The firstly folded absorbent article 12 comprises an upper part 13 and a lower part 14. As can be seen from figure 2 the front section 5 and the rear section 6 of the absorbent article 1 of the firstly folded absorbent article 12 are folded such that the absorbent core 4 in the front section 5 and the rear section 6 do not mutually overlap. Due to the greater extension of the additional layer 10 compared with the absorbent core 4, the firstly folded article 12 may

according to the invention be folded such that the additional layer 10 of the front and rear section 5, 6 mutually overlap, but still without having the absorbent core 4 in the front section 5 and the rear section 6 mutually overlapping. In figure 2 the entire front section 5 and rear section 6 do not overlap at all in order to more clearly illustrate the principle of the invention.

Figure 2 shows how the firstly folded absorbent article 12 is supposed to be folded. Figure 2 shows the case where the firstly folded absorbent article 12 is folded using a valley fold. The valley fold is described above. In figure 2 the lower part 14 is folded upwards over the upper part 13 towards a fictional viewer looking down at the secondly folded absorbent article 15. The fold is intended to take place along a longitudinal centre line 9 of the absorbent article 1. Slight deviations from the exact longitudinal centre line 9 are allowable without influence on the effect of the invention.

Figure 3 schematically shows a secondly folded absorbent article 15 according to the invention. The secondly folded absorbent article 15 comprises a front part 16 and a rear part 17. In figure 3 it also exaggerated for illustrational purposes that the core 4 present in the front section 5 and the rear section 6 does not overlap.

Figure 3 shows how the secondly folded absorbent article 15 is supposed to be folded. Figure 3 shows the case where the secondly folded absorbent article 15 is folded using a valley fold. The valley fold is described above. In figure 3 the front part 16 is folded upwards and to the right over the left part towards a fictional viewer looking down at the secondly folded absorbent article 15. The fold is intended to take place in a region 18 where the absorbent core 4 of the front section 5 and the rear section 6 is lacking, thereby forming a thirdly folded absorbent article 19 shown in figure 4. A fold line is marked for illustrational purposes only. A fold anywhere in said region 18 is allowable to achieve the effect of the invention.

Figure 4 schematically shows a thirdly folded absorbent article 19 according to the invention. In figure 4 the thirdly folded absorbent article 19, i.e. the final folded absorbent article is shown. It can be seen along a side edge 20 of the thirdly folded absorbent article 19 that the core 4 is not present where the final fold took place, i.e. the core 4 does not extend all the way out to the side edge 20. The distance from the side edge 20 to the core 4 is exaggerated for illustrational purposes. It is possible for the core 4 to extend to the side edge 20 without overlapping the side edge 20 for the effect of the invention to be achieved.

Figure 5 schematically shows a cross section along a longitudinal direction of an absorbent article 1 according to the invention. The absorbent article 1 is shown in a plane state, i.e. before the absorbent article 1 has been folded. The absorbent core 4 is placed between a top sheet 2 and a back sheet 3. The top sheet 2 is the layer which lies in contact with the wearer's body when the absorbent article 1 is in use. As such, it should be soft, non-irritating and comfortable against the skin, and bodily fluid should be able to pass through it without hindrance. The top sheet 2 can consist of a nonwoven material, e.g. spunbond, meltblown, carded, hydroentangled, wetlaid etc. Suitable nonwoven materials can be composed of natural fibres, such as wood pulp or cotton fibres, manmade fibres, such as polyester, polyethylene, polypropylene, viscose etc or from a mixture of natural and manmade fibres. The top sheet 2 may further be composed of tow fibres, which may be bonded to each other in a bonding pattern. Further examples of materials suitable for top sheets are porous foams, apertured plastic films etc.

The back sheet 3 of the absorbent article 1 in this configuration is the layer which lies farthest from the wearer's body when the absorbent article 1 is in use. To protect the wearer's garments from soiling, it should be liquid-impermeable, but desirably gas-permeable (i.e. breathable) to allow air and vapour to pass in and out of the core 4 so that the warm, damp conditions which can arise in the core 4 are reduced. Typically, the back sheet 3 is of a liquid impervious material, such as a thin plastic film, e.g. a polyethylene or polypropylene film, a nonwoven material coated with a liquid impervious material, a hydrophobic nonwoven material, which resists liquid penetration or a laminate comprising plastic films and nonwoven materials. Examples of breathable back sheet materials are porous polymeric films, nonwoven laminates from spunbond and meltblown layers, laminates from porous polymeric films and nonwovens.

The absorbent core 4 of the absorbent article 1 in this configuration acts to receive and contain liquid and possibly other bodily exudates and is described above.

The top sheet 2 and back sheet 3 may be joined to one another by any means common in the art, e.g., ultrasonic welding, thermal welding or gluing.

Figure 5 is intended to illustrate the meaning of the absorbent core 4 according to the invention. In figure 5 a core 4, an additional layer 10, the top sheet 2 and the back sheet 3 are shown. The additional layer 10 may be an acquisition layer, a distribution layer or an additional absorbing layer. The absorbent core 4 may comprise superabsorbents.

In figure 5 the back sheet 3, the absorbent core 4, the additional layer 10 and the top sheet 2 is visible. The thicknesses of the back sheet 3, the absorbent core 4, the additional layer 10 and the top sheet 2 are not to scale. As can be seen thickness of the absorbent article 1 is different in the longitudinal direction. For the purpose of this invention the core 4 is delimited in the longitudinal direction by a boundary 21 between the core 4 and the top sheet 2. Another way of describing the core 4 is that it is the part of the absorbent article 1 that comprises the largest amount of layers. For instance, in figure 5 an inner part 22 located inside the boundary 21 of the absorbent article 1 comprises four layers: the back sheet 3, the absorbent core 4, the additional layer 10 and the top sheet 2. An outer part 23 located outside of the boundary 21 comprises in figure 5 only two layers: the back sheet 3 and the top sheet 2. By making sure that the inner part 22 of the front section 5 does not mutually overlap the inner part 22 of the rear section 6 when forming the firstly folded absorbent article 12 the effect of the invention can be achieved. Although the additional layer 10 in figure 5 has the same extension as the core 4 the additional layer 10 may sometimes have a shape that causes the additional layer 10 to have different extent than the absorbent core 4.

Reference signs mentioned in the claims should not be seen as limiting the extent of the matter protected by the claims, and their sole function is to make claims easier to understand.

As will be realised, the invention is capable of modification in various obvious respects, all without departing from the scope of the appended claims. Accordingly, the drawings and the description thereto are to be regarded as illustrative in nature, and not restrictive.

CLAIMS

1. Folded absorbent article (1) such as a sanitary napkin, incontinence pad or panty liner, the absorbent article (1) comprising at least a liquid permeable top sheet (2), a liquid impermeable back sheet (3) and an absorbent core (4) placed between the top sheet (2) and the back sheet (3), the absorbent article (1) having in an unfolded state an extent in a plane in a longitudinal direction and a lateral direction and a thickness perpendicular to said plane, the absorbent article (1) comprises in an unfolded state in the longitudinal direction a front section (5), a rear section (6) and between them a central section (7), the absorbent article (1) having in an unfolded state a transverse centre line (8) and a longitudinal centre line (9); wherein the rear section (6) and the front section (5) of the absorbent article (1) are folded towards the transverse centre line (8) thereby forming a firstly folded absorbent article (12); the firstly folded absorbent article (12) is folded essentially along the longitudinal centre line (9) thereby forming a secondly folded absorbent article (15);
characterized in that the front section (5) and the rear section (6) of the absorbent article (1) are folded such that the absorbent core (4) in the front section (5) and the rear section (6) do not mutually overlap when forming the firstly folded absorbent article (12), and in that the secondly folded absorbent article (15) is transversely folded in a region (18) where the absorbent core (4) of the front section (5) and the rear section (6) is lacking, thereby forming a thirdly folded absorbent article (19).

2. Absorbent article (1) according to claim 1, wherein the front section (5) and the rear section (6) of the firstly folded absorbent article (12) do not mutually overlap.

3. Absorbent article (1) according to claim 1 or 2, wherein the front section (5) and the rear section (6) of the firstly folded absorbent article (12) are folded over the central section (7) such that the top sheet (2) of the front section (5) and the top sheet (2) of the rear section (6) faces the top sheet (2) of the central section (7).

4. Absorbent article (1) according to claim 3, wherein the firstly folded absorbent article (12) is folded along the longitudinal centre line (9) with a valley fold or mountain fold such that the back sheet (3) of the firstly folded absorbent article (12) faces itself when forming the secondly folded absorbent article (15).

5. Absorbent article (1) according to claim 1 or 2, wherein the front section (5) and the rear section (6) of the firstly folded absorbent article (12) are folded over the central section (7) such that the back sheet (3) of the front section (5) and the back sheet (3) of the rear section (6) faces the back sheet (3) of the central section (7).

6. Absorbent article (1) according to claim 5, wherein the firstly folded absorbent article (12) is folded along the longitudinal centre line (9) in a valley fold or mountain fold such that the top sheet (2) of the firstly folded absorbent article (12) faces itself when forming the secondly folded absorbent article (15).

7. Absorbent article (1) according to any of the preceding claims, wherein the absorbent article (1) comprises wings and the wings are folded over the front section (5) and the rear section (6) of the firstly folded article.

8. Absorbent article (1) according to claim 7, wherein the wings are folded over the front section (5) and the rear section (6) of the firstly folded article such that the wings at least partially mutually overlap.

9. Absorbent article (1) according to claims 7 or 8, wherein the back sheet (3) of the absorbent article (1) comprises fastening means and at least part of the wings are fastened to the back sheet (3) of the absorbent article (1) after the wings are folded over the front section (5) and the rear section (6) of the firstly folded article.

10. Packaging unit for absorbent articles, the packaging unit comprising at least one absorbent article (1) according to any one of the claims 1-9.

11. Method for folding an absorbent article (1) such as a sanitary napkin, incontinence pad or panty liner, the absorbent article (1) comprising at least a liquid permeable top sheet (2), a liquid impermeable back sheet (3) and an absorbent core (4) placed between the top sheet (2) and the back sheet (3), the absorbent article (1) having an extent in a plane in a longitudinal direction and a lateral direction and a thickness perpendicular to said plane, the absorbent article (1) comprises in the longitudinal direction a front section (5), a rear section (6) and between them a central section (7), the absorbent article (1) having a transverse centre line (8) and a longitudinal centre line (9), the method comprises:
- folding the front section (5) and the rear section (6) over the central section (7) such that the absorbent core (4) in the front section (5) and the rear section (6) do not mutually overlap thereby forming a firstly folded absorbent article (12);
- folding the firstly folded absorbent article (12) essentially along the longitudinal centre line (9) thereby forming a secondly folded absorbent article (15);

- folding the secondly folded absorbent article (15) in a region (18) where the absorbent core (4) of the front section (5) and the rear section (6) is lacking, thereby forming a thirdly folded absorbent article (19).

12. Method according to claim 11, wherein the method comprises:
- folding the front section (5) and the rear section (6) over the central section (7) such that the front section (5) and the rear section (6) do not mutually overlap thereby forming a firstly folded absorbent article (12).

13. Method according to claim 11 or 12, wherein the method comprises: when forming the secondly folded absorbent article (15)
- folding the firstly folded absorbent article (12) along the longitudinal centre line (9) with a valley fold or mountain fold such that the back sheet (3) of the firstly folded absorbent article (12) faces itself.

14. Method according to claim 11 or 12, wherein the method comprises: when forming the secondly folded absorbent article (15).
- folding the firstly folded absorbent article (12) along the longitudinal centre line (9) with a valley fold or mountain fold such that the top sheet (2) of the firstly folded absorbent article (12) faces itself.

15. Method according to any of the preceding claims, wherein the absorbent article (1) comprises wings and wherein the method comprises:
- folding the wings over the front section (5) and the rear section (6) of the firstly folded article.

16. Method according to claim 15, wherein the method comprises:
- folding the wings over the front section (5) and the rear section (6) of the firstly folded article such that the wings at least partially overlap.

17. Method according to claim 15 or 17, wherein the back sheet (3) of the absorbent article (1) comprises fastening means and the method comprises:
- fastening at least part of the wings to the back sheet (3) of the absorbent article (1) after the wings are folded over the front section (5) and the rear section (6) of the firstly folded article.

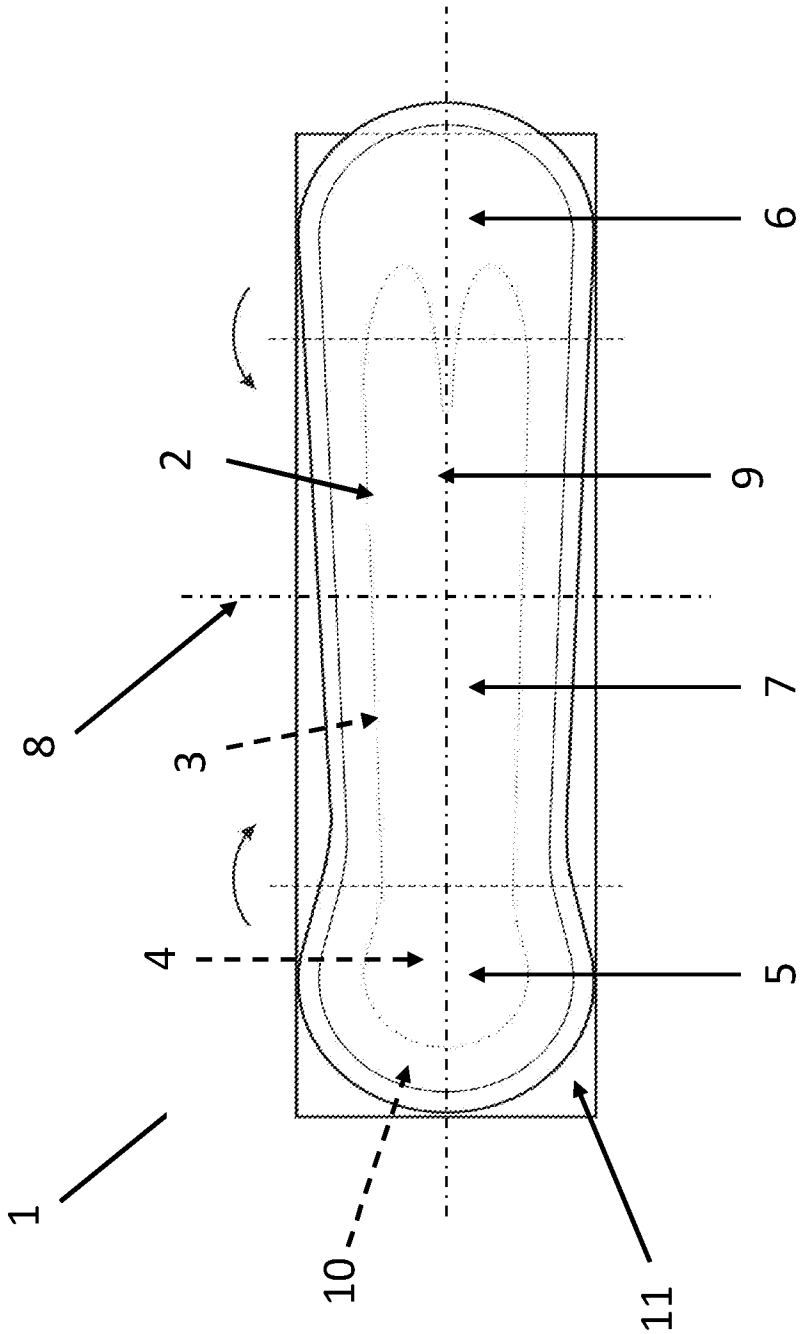

Fig. 1

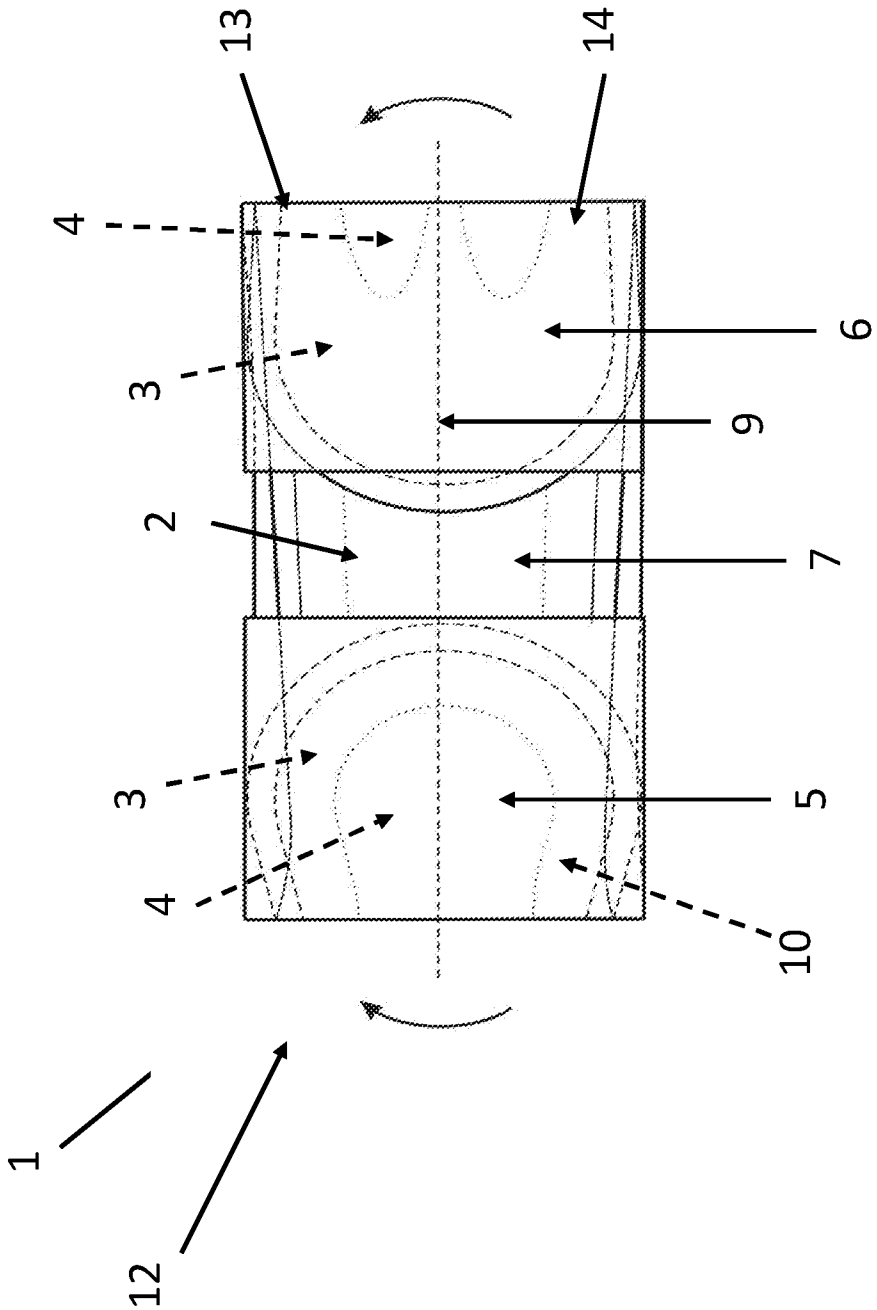

Fig. 2

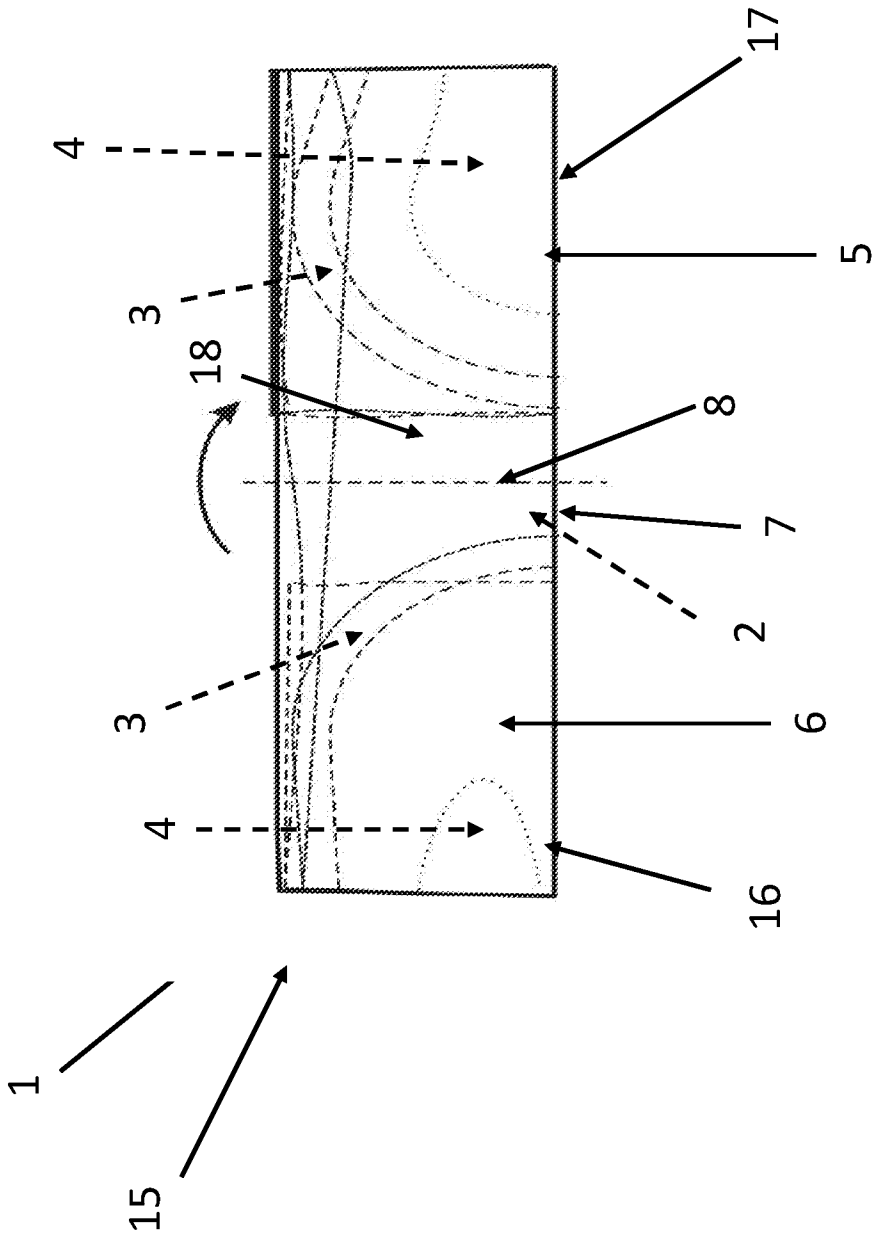

Fig. 3

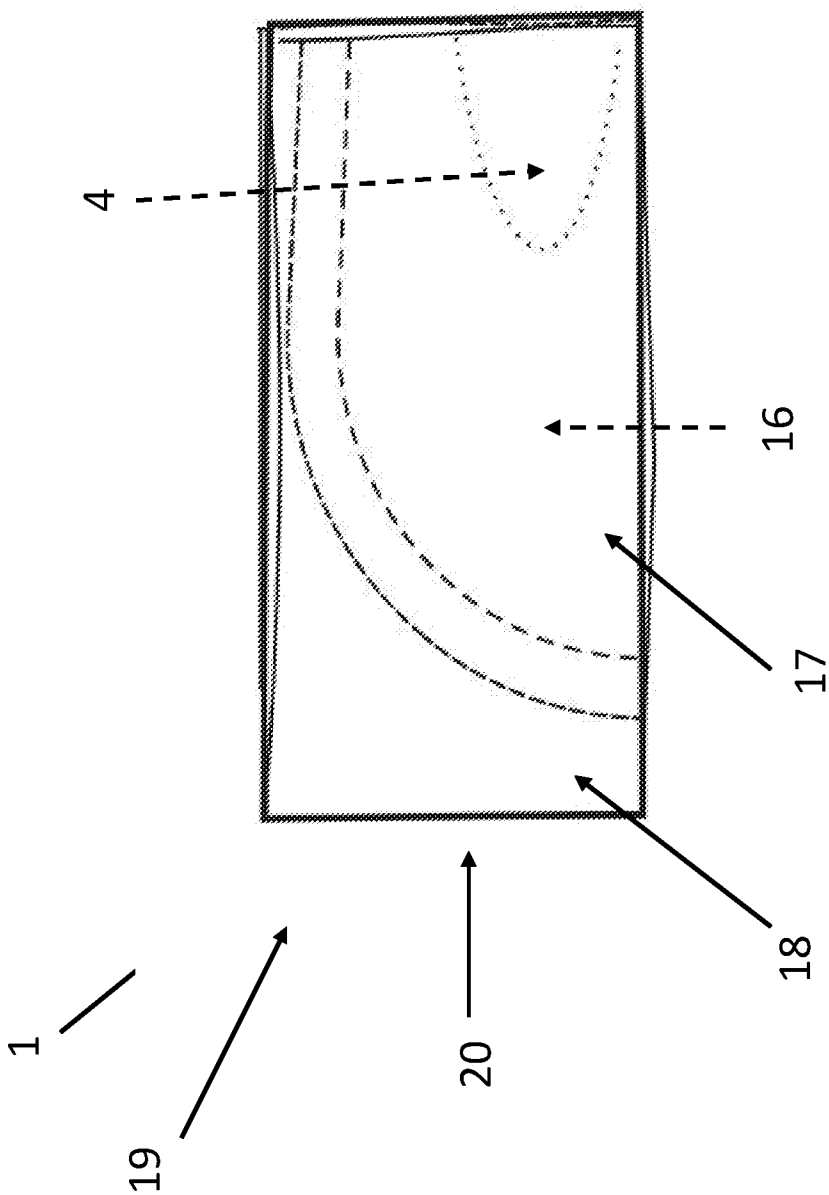

Fig. 4

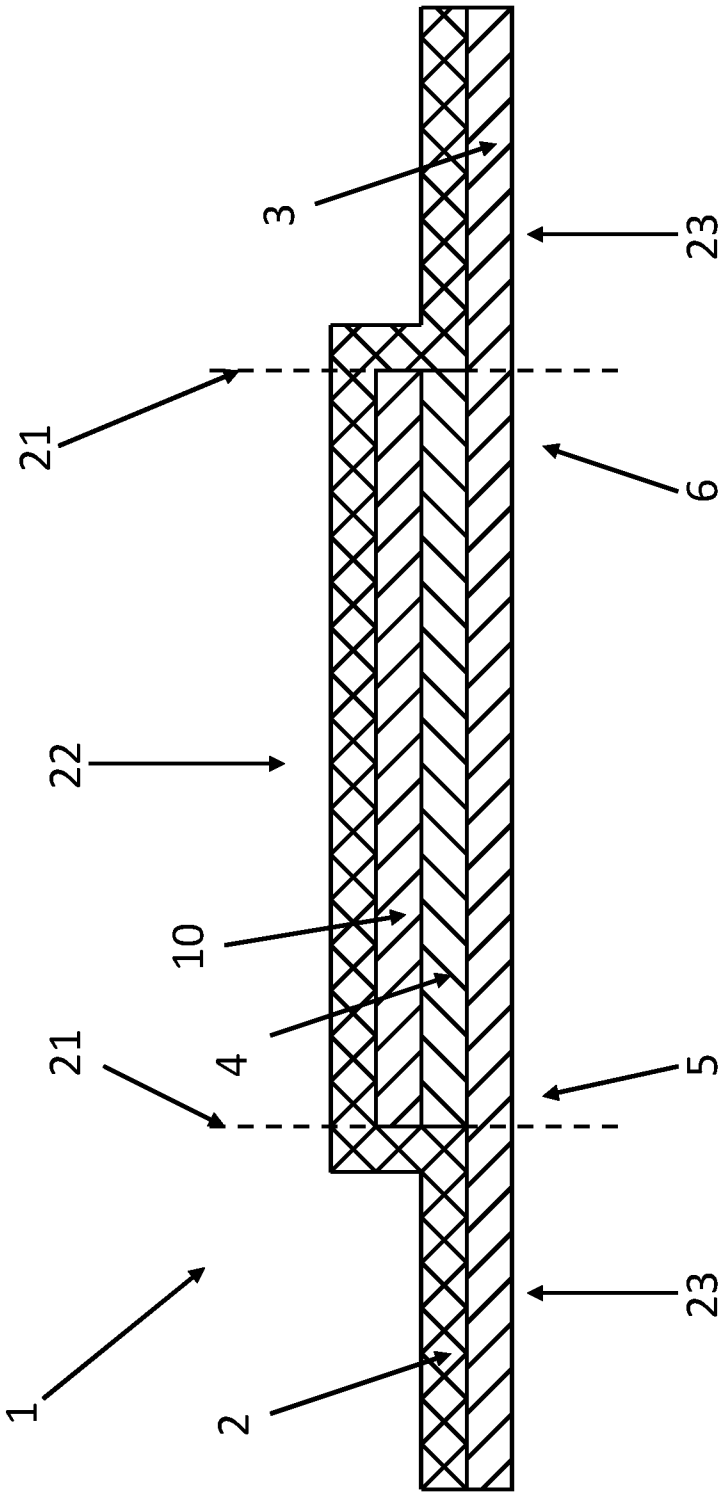

Fig. 5

INTERNATIONAL SEARCH REPORT

International application No.
PCT/SE2012/050682

A. CLASSIFICATION OF SUBJECT MATTER

IPC: see extra sheet

According to International Patent Classification (IPC) or to both national classification and IPC

B. FIELDS SEARCHED

Minimum documentation searched (classification system followed by classification symbols)

IPC: A61F

Documentation searched other than minimum documentation to the extent that such documents are included in the fields searched

SE, DK, FI, NO classes as above

Electronic data base consulted during the international search (name of data base and, where practicable, search terms used)

EPO-Internal, PAJ, WPI data

C. DOCUMENTS CONSIDERED TO BE RELEVANT

Category*	Citation of document, with indication, where appropriate, of the relevant passages	Relevant to claim No.
Y	JP 2010201093 A (KAO CORP), 16 September 2010 (2010-09-16); (abstract) Retrieved from: WPI database, WEEK 201063, AN 2010-L70984; (abstract) Retrieved from EPODOC database; Original document: figures 2-3, paragraphs [0012]-[0016] --	1-17
Y	WO 0021477 A1 (PROCTER & GAMBLE), 20 April 2000 (2000-04-20); abstract; page 6, paragraph [0001] - paragraph [0004]; page 7, paragraph [0002]; figures 6-8 --	1-17
A	WO 9620668 A1 (MOELNLYCKE AB ET AL), 11 July 1996 (1996-07-11); abstract; page 16, line 1 - line 2; figures 1-7 --	1-17

☒ Further documents are listed in the continuation of Box C. ☒ See patent family annex.

* Special categories of cited documents:
"A" document defining the general state of the art which is not considered to be of particular relevance
"E" earlier application or patent but published on or after the international filing date
"L" document which may throw doubts on priority claim(s) or which is cited to establish the publication date of another citation or other special reason (as specified)
"O" document referring to an oral disclosure, use, exhibition or other means
"P" document published prior to the international filing date but later than the priority date claimed
"T" later document published after the international filing date or priority date and not in conflict with the application but cited to understand the principle or theory underlying the invention
"X" document of particular relevance; the claimed invention cannot be considered novel or cannot be considered to involve an inventive step when the document is taken alone
"Y" document of particular relevance; the claimed invention cannot be considered to involve an inventive step when the document is combined with one or more other such documents, such combination being obvious to a person skilled in the art
"&" document member of the same patent family

Date of the actual completion of the international search
08-03-2013

Date of mailing of the international search report
11-03-2013

Name and mailing address of the ISA/SE
Patent- och registreringsverket
Box 5055
S-102 42 STOCKHOLM
Facsimile No. + 46 8 666 02 86

Authorized officer
Monika Bohlin
Telephone No. + 46 8 782 25 00

INTERNATIONAL SEARCH REPORT

International application No.
PCT/SE2012/050682

C (Continuation). DOCUMENTS CONSIDERED TO BE RELEVANT

Category*	Citation of document, with indication, where appropriate, of the relevant passages	Relevant to claim No.
A	JP 2011019986 A (UNI CHARM CORP), 3 February 2011 (2011-02-03); (abstract) Retrieved from: WPI database, WEEK 201113, AN 2011-B31497; (abstract) Retrieved from EPODOC database; Original document: figures 1-4 --	1-17
A	JP 2007050137 A (UNI CHARM CORP), 1 March 2007 (2007-03-01); (abstract) Retrieved from: WPI database, WEEK 200726, AN 2007-262613; (abstract) Retrieved from EPODOC database; Original document: figures 1-4 --	1-17
A	JP 4341261 A (KAO CORP), 27 November 1992 (1992-11-27); (abstract) Retrieved from: WPI database, WEEK 199302, AN 1993-013430; (abstract) Retrieved from EPODOC database; Original document: figures 1-8 --	1-17
A	EP 2130522 A1 (UNI CHARM CORP), 9 December 2009 (2009-12-09); abstract; figures 1-9 --	1-17
A	WO 2007041212 A1 (KIMBERLY CLARK CO ET AL), 12 April 2007 (2007-04-12); abstract; page 12, line 32 - page 13, line 3; figures 1-14 --	1-17
A	JP 2012081066 A (KAO CORP), 26 April 2012 (2012-04-26); (abstract) Retrieved from: WPI database, WEEK 201230, AN 2012-E74391; (abstract) Retrieved from EPODOC database; Original document: figures 1-8 --	1-17
A	JP 2010220911 A (DAIO SEISHI KK), 7 October 2010 (2010-10-07); (abstract) Retrieved from: WPI database, WEEK 201070, AN 2010-M75037; (abstract) Retrieved from EPODOC database; Original document: figures 1-8 --	1-17
A	JP 10305059 A (SHISEIDO CO LTD), 17 November 1998 (1998-11-17); (abstract) Retrieved from: WPI database, WEEK 199905, AN 1999-053432; (abstract) Retrieved from EPODOC database; Original document: figures 1-2 --	1-17

INTERNATIONAL SEARCH REPORT

International application No.
PCT/SE2012/050682

C (Continuation). DOCUMENTS CONSIDERED TO BE RELEVANT

Category*	Citation of document, with indication, where appropriate, of the relevant passages	Relevant to claim No.
A	WO 03070123 A2 (SHAPE DESIGN LTD ET AL), 28 August 2003 (2003-08-28); abstract; figures 3a-3d --	1-17
A	US 20080140041 A1 (LEVIS ERIC ET AL), 12 June 2008 (2008-06-12); abstract; figure 6 --	1-17
A	US 20060218700 A1 (UDA MASASHI), 5 October 2006 (2006-10-05); abstract; figures 1-2 -- --------	1-17

Continuation of: second sheet

International Patent Classification (IPC)

A61F 13/84 (2006.01)
A61F 13/47 (2006.01)
A61F 13/535 (2006.01)

JP	2010201093	A	16/09/2010	NONE			
WO	0021477	A1	20/04/2000	AU	6509999	A	01/05/2000
WO	9620668	A1	11/07/1996	AU	4361396	A	24/07/1996
				SE	9404520	A	01/07/1996
JP	2011019986	A	03/02/2011	JP	4727760	B2	20/07/2011
JP	2007050137	A	01/03/2007	JP	4727347	B2	20/07/2011
JP	4341261	A	27/11/1992	JP	3088771	B2	18/09/2000
EP	2130522	A1	09/12/2009	AT	508719	T	15/05/2011
				AU	2008230485	A1	02/10/2008
				CN	101636134	A	27/01/2010
				JP	4922802	B2	25/04/2012
				JP	2008237384	A	09/10/2008
				TW	200913968	A	01/04/2009
				US	20100121296	A1	13/05/2010
				WO	2008117755	A1	02/10/2008
WO	2007041212	A1	12/04/2007	AU	2006297253	A1	12/04/2007
				BR	PI0616829	A2	05/07/2011
				EP	1931294	A1	18/06/2008
				KR	20080053333	A	12/06/2008
JP	2012081066	A	26/04/2012	NONE			
JP	2010220911	A	07/10/2010	NONE			
JP	10305059	A	17/11/1998	JP	3790604	B2	28/06/2006
WO	03070123	A2	28/08/2003	AU	2003209575	A1	09/09/2003
				US	20050173292	A1	11/08/2005
US	20080140041	A1	12/06/2008	NONE			
US	20060218700	A1	05/10/2006	AU	2003242490	B2	10/09/2009
				CA	2528775	C	17/08/2010
				CN	1770989	B	21/07/2010
				EP	1639908	A4	19/01/2011
				KR	20060038362	A	03/05/2006
				KR	100968898	B1	14/07/2010
				US	20090299321	A1	03/12/2009
				US	8105304	B2	31/01/2012
				WO	2004112518	A1	29/12/2004