(No Model.) 3 Sheets—Sheet 1.

A. W. HAM.

SAND BOX FOR CAR TRACKS.

No. 590,220. Patented Sept. 21, 1897.

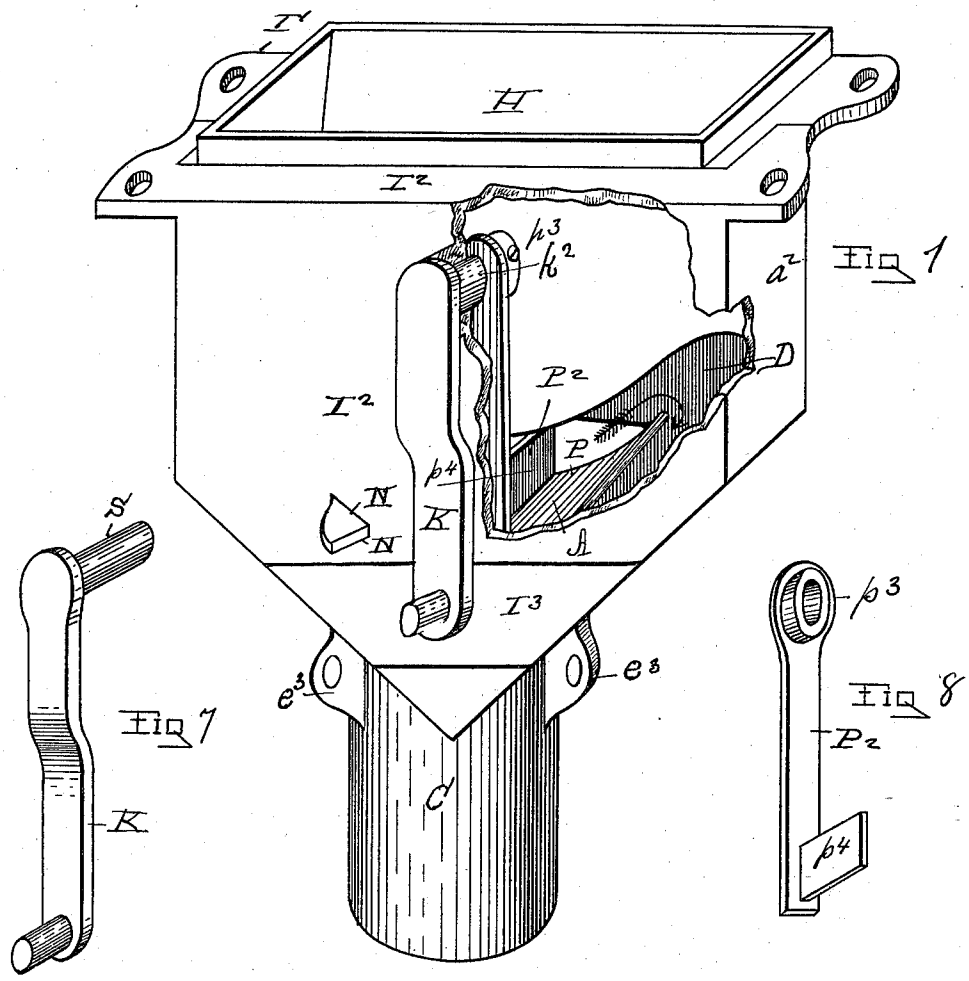

Fig. 1

Fig. 7

Fig. 8

Witnesses
Geo. A. Darby.
Charles S. Burtnett

Inventor.
Albert W. Ham
by W. E. Hagan Atty

THE NORRIS PETERS CO., PHOTO-LITHO., WASHINGTON, D. C.

(No Model.) 3 Sheets—Sheet 2.

A. W. HAM.

SAND BOX FOR CAR TRACKS.

No. 590,220. Patented Sept. 21, 1897.

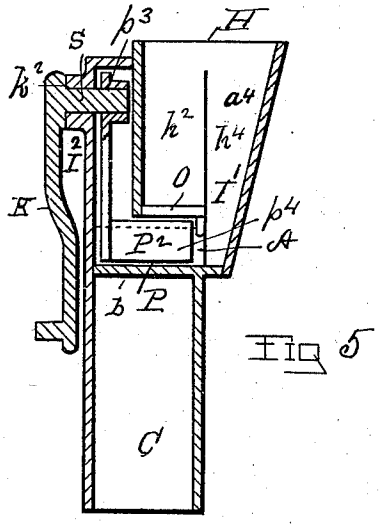

Fig 5

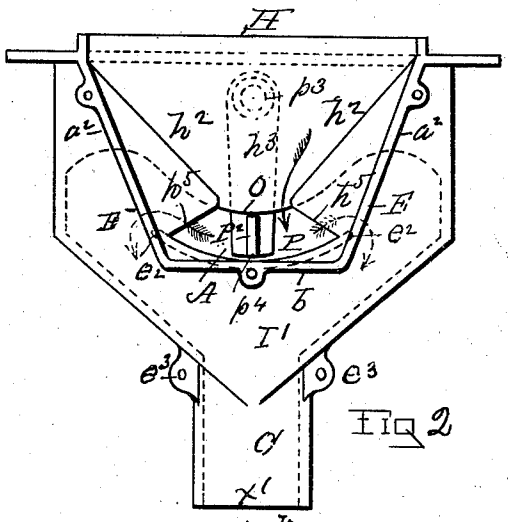

Fig 2

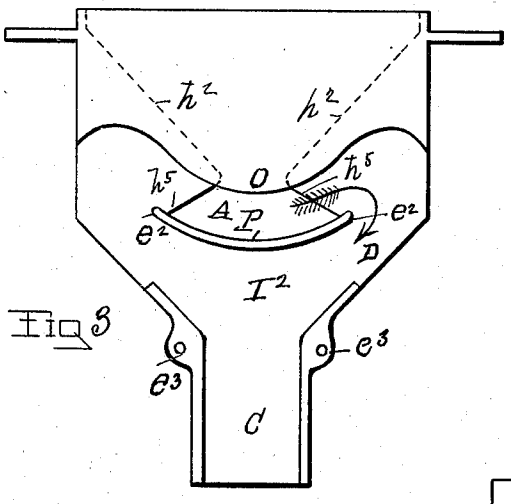

Fig 3

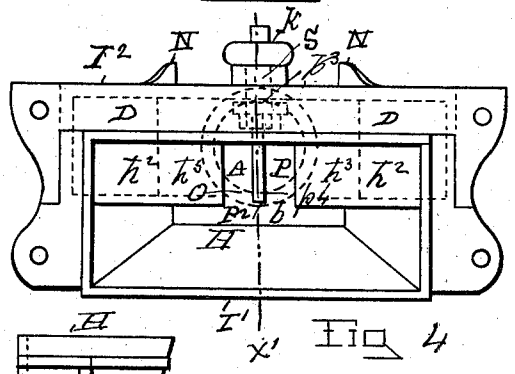

Fig 4

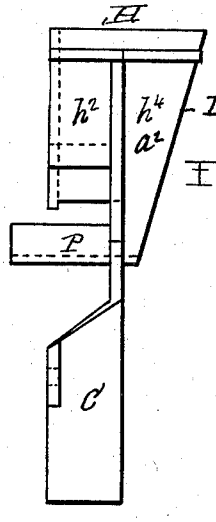

Fig 6

Witnesses.
Geo. A. Darby.
Charles S. Brinsmade

Inventor.
Albert W. Ham
by W. E. Hagan
Atty

THE NORRIS PETERS CO., PHOTO-LITHO., WASHINGTON, D. C.

(No Model.) 3 Sheets—Sheet 3.

A. W. HAM.

SAND BOX FOR CAR TRACKS.

No. 590,220. Patented Sept. 21, 1897.

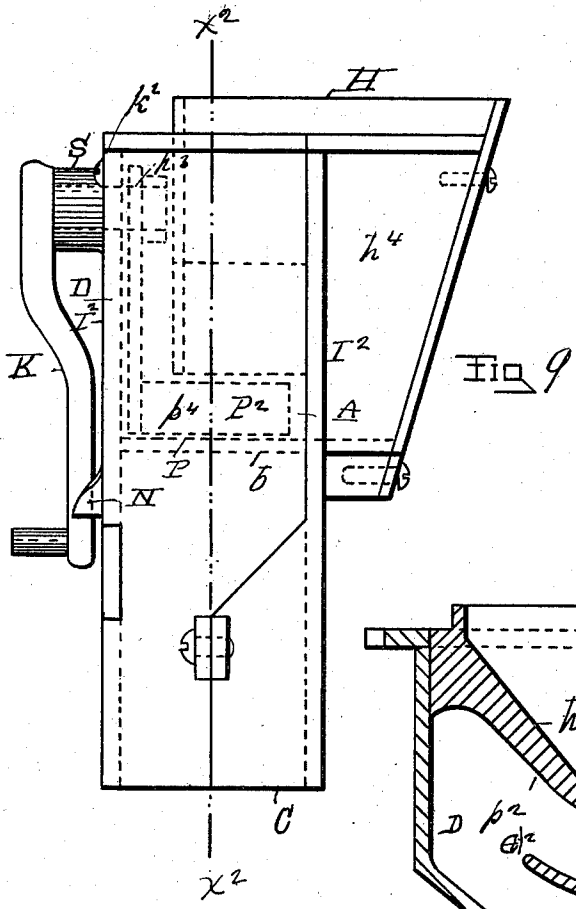

Fig. 9

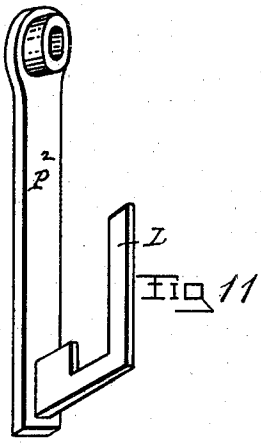

Fig. 11

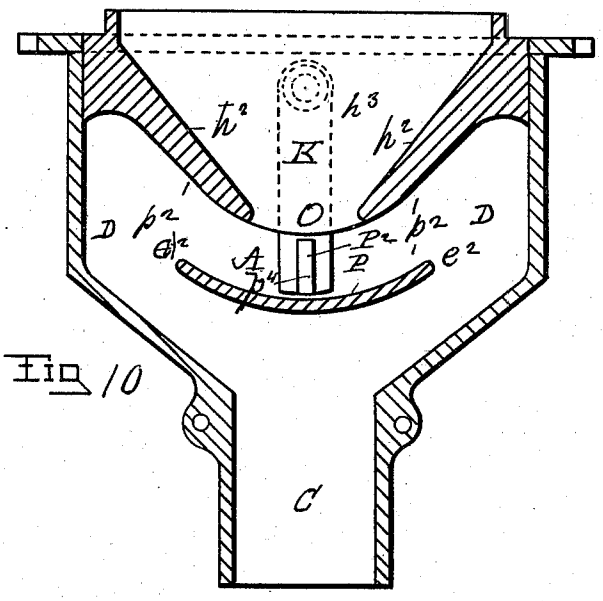

Fig. 10

Witnesses.
Geo. A. Darby.
Charles S. Burtnett

Inventor.
Albert W. Ham
by W. E. Hagan
atty

THE NORRIS PETERS CO., PHOTO-LITHO., WASHINGTON, D. C.

UNITED STATES PATENT OFFICE.

ALBERT W. HAM, OF LANSINGBURG, NEW YORK, ASSIGNOR TO THE TROJAN BUTTON FASTENER COMPANY, INCORPORATED, OF TROY, NEW YORK.

SAND-BOX FOR CAR-TRACKS.

SPECIFICATION forming part of Letters Patent No. 590,220, dated September 21, 1897.

Application filed February 9, 1897. Serial No. 622,596. (No model.)

To all whom it may concern:

Be it known that I, ALBERT W. HAM, of the village of Lansingburg, county of Rensselaer, and State of New York, have invented new and useful Improvements in Sand-Boxes for Car-Tracks, of which the following is a specification.

My invention relates to improvements in sand-boxes which are used to supply sand to the rails of car-tracks when they become slippery, and more particularly to improvements upon the sand-box described in Letters Patent, granted to me as inventor on the 24th day of March, 1896, No. 556,885.

My improvements as set forth herein have for their object to simplify the construction, to reduce the cost of their manufacture, and to produce a sand-box in which no valve is used to regulate the supply of sand delivered to the track, and by which improvement the contingency of exhausting the supply by excessive use is avoided.

In the device shown in my older patent before named the paddles operating to deliver sand in regular quantities from the hopper into the distributing-chamber were combined with paddles arranged in the latter, which forced the sand to pass into the chute or spout, with both sets of paddles arranged so as to be operated by the intermittent movement of the same shaft, actuated to be rotated by means of a ratchet-wheel on the shaft, and a lever pivoted to the latter and provided with a pawl, which as the lever was reciprocated intermittently operated the paddle-shaft.

By my improvement as set forth herein the hopper interior is so constructed and combined with the sand-distributing chamber as to require but the use of one paddle, which is actuated by a rock-shaft to deliver into the sand-distributing chamber a regulated quantity of sand at each reciprocation of the paddle.

Accompanying this specification to form a part of it there are three plates of drawings, containing eleven figures, illustrating my intion, with the same designation of parts by letter-reference used in all of them.

Of the illustrations, Figure 1 is a perspective of my improved sand-box with part of its front wall broken out, so as to show part of the interior. Fig. 2 is a back view of the sand-box with its rear wall where back of the hopper removed and showing the paddle-arm, together with the rock-shaft, as well as the top of the sand-delivery chamber, and part of the concave bottom of the paddle-chamber by dotted lines and part shown by full lines. Fig. 3 is a front view of the back plate, with the downwardly and inwardly inclined guide-plates of the hopper part shown by dotted lines, with the roof of the sand-delivery chamber shown by full lines, as well as the bottom of the paddle-chamber. Fig. 4 is a top view of the sand-box. Fig. 5 is a section taken on the line $x' x'$ of Fig. 4. Fig. 6 is an end view of the back plate. Fig. 7 is a perspective of the crank-arm, (shown as detached,) which as reciprocated actuates the rock-shaft. Fig. 8 is a perspective of the paddle, shown as detached. Fig. 9 is an end view of the sand-box. Fig. 10 is a section taken on the line $x^2 x^2$ of Fig. 9; and Fig. 11 is a perspective of a modified form of paddle, with which there is combined an upwardly-projected agitator.

The several parts of the apparatus thus illustrated are designated by letter-reference, and the function of the parts is described as follows:

The letter H designates the hopper, and D the sand-delivery chamber, which latter is located in front of the hopper and constructed to connect laterally with the latter by means of a passage-way over each of the upcurved ends of the paddle-chamber bottom, (designated at P.

The letter C designates the chute or spout connecting with the sand-distributing chamber D, by which sand is delivered to the rails of the car-track by gravity.

The hopper H has interiorly arranged within its front portion and projected downwardly and inwardly from each of its opposite sides a guide-plate h^2, each extending rearwardly from its front wall about half its depth from front to rear. These guide-plates h^2 where approaching each other are constructed to form an intermediate passage into the paddle-chamber A, and therefrom these plates at h^5 are each projected downwardly and outwardly to connect with the end walls E E, and

thus roof over part of the chamber A. The space thus inclosed by the plates h^2 is designated at h^3. The passage from the latter to the paddle-chamber is designated at O, and the hopper interior, into which the space bounded by these plates h^2 opens out rearwardly, is designated at h^4, and the bottom of the hopper proper is designated at b.

The paddle-chamber A at its rear connects laterally with the hopper proper interior h^4 and at its front end is inclosed by rear face of the front plate I^2.

The letter P designates the concave bottom of the paddle-chamber, having the center of its bottom horizontally in line with the bottom b of the hopper proper. The ends of this concave bottom plate of the paddle-chamber are designated at e^2 e^2, and the passage over them into the sand-distributing chamber D is designated at p^2 p^2.

The letter S designates the rock-shaft, which is journaled into the plate I^2 of the apparatus.

The letter K designates a crank-arm which at its upper end k^2 is keyed to said rock-shaft outside of the hopper-wall, and at its lower end this crank-arm is adapted to be vibrated between the two stops N N on the front wall of the hopper, and thus oscillate said rock-shaft in its bearings.

The letter P^2 designates a paddle the arm p^3 of which is keyed at its upper end to the rock-shaft S and is therefrom dependent within the chamber A, and the letter p^4 designates the paddle-foot, which is laterally projected from the lower end and rear side of the paddle-arm, with the bottom of this foot arranged just above the upper surface of the bottom plate P. Thus constructed and arranged, when the hopper is supplied with sand and the shaft S is oscillated by the vibration of the crank-arm K a measure of sand will by the movement of the paddle be alternately carried up over each of the upcurved ends of the concave plate p, to be discharged into the sand-distributing chamber D, to pass therefrom into the chute or spout C.

The downwardly and inwardly contracted plates h^2 inclose within the hopper H (in connection with the rear side of the plate I^2) on three sides the area h^3, through which latter, as thus contracted, the sand descends by gravity through the passage O to the paddle-chamber A. These inclined plates, as thus placed, sustain in part the weight of the sand above them and limit the flow of the latter in its descent. Where these inclined plates h^2 curve outwardly to connect with the hopper sides, they roof in the paddle-chamber and thus prevent the direct passage of the sand into the chamber D and guide it into the paddle-chamber. The area proper of the hopper is designated at h^4, the bottom of which (designated at b) supports the weight of the sand therein, and by the relative position of which area h^4 the sand contained therein passes diagonally into the paddle-chamber. As the parts are thus constructed, the paddle is free to vibrate and to carry at each reciprocation a measure of sand over each of the upturned edges of the paddle-chamber bottom into the chamber D, to descend therefrom onto the rail-tracks. While I have shown the paddle as operated by an oscillating rock-shaft, it may be caused to vibrate, as I use it, by any other well-known means.

Preferably the apparatus thus described is made of cast metal in three pieces I′, I^2, and I^3, the latter being a simple plate attached by screws and made detachable to furnish access to the apparatus interior. The plate I′ has formed integrally with it the sides a^2 a^2 of the hopper H within the latter, the concave bottom of the paddle-chamber, part of the chamber D where below the hopper proper, and part of the spout or chute C for the delivery of the sand. The plate I^2 forms the front and end walls of the sand-distributing chamber, the front wall of the paddle-chamber A, and part of the spout C. Each of these plate parts I′ and I^2 are provided with ears e^3 e^3 on their spout parts, which register when the edges of the parts are coincidently brought to contact and connected by screws. While this construction of the plate parts I′ and I^2 embody in their form the mechanical elements constituting my invention, I do not limit the latter to their use as integrally made, for the same elements of construction may be employed to perform the same functions that I describe when made in a greater number of like operating parts.

In the modification shown at Fig. 11 the paddle is provided with an upcast agitator L, arranged to enter the opening O and be vibrated therein by the movement of the paddle. This modification of the paddle is designed to be employed when such sand is used, which under some circumstances might be inclined to pack and not descend freely, although the use of the agitator is not essential in all cases.

Having thus described my invention, what I claim, and desire to secure by Letters Patent, is—

1. In a sand-box for cars the combination with a hopper having a downwardly and inwardly contracted area in part of its interior, opening out at its rear side into the interior of the hopper proper; of a paddle-chamber provided with a concave bottom, and arranged immediately beneath said contracted area to connect therewith at the bottom of the latter; a sand-distributing chamber arranged at the front of the hopper, and made to connect with said paddle-chamber over the upturned edges of the latter; a rock-shaft journaled in the sand-box near its top; a paddle attached to, and depending from said rock-shaft to be within said paddle-chamber, whereby as said rock-shaft is reciprocatingly rotated, said paddle will be vibratingly moved in said paddle-chamber, and by its movement carry sand over the upturned edges of the paddle-chamber bottom into the sand-distributing cham-

ber to descend through the spout to the track substantially as shown and described.

2. In a sand-box, the combination with a hopper, of a sand-delivery chamber arranged at the side of the hopper; a paddle-chamber arranged beneath the hopper, and provided with a concave bottom; a rock-shaft journaled in the top of the box; a paddle depending from said rock-shaft within said paddle-chamber, whereby as said shaft is reciprocatingly rotated said paddle will be vibrated in the paddle-chamber, and alternatingly carry a measure of sand over the upturned edges of the paddle-chamber bottom to enter the distributing-chamber and therefrom to descend by the spout to the car-track substantially as shown and described.

3. In a sand-box the combination with a hopper, of a sand-distributing chamber arranged at the side of the hopper, and provided with a spout at its lower end; a paddle-chamber constructed to receive sand from the hopper, and having a concave bottom; said paddle-chamber connecting with the sand-distributing chamber over the upturned edges of said paddle-chamber bottom; a rock-shaft journaled in the top of the sand-box; a paddle depending from said rock-shaft within said paddle-chamber whereby as said rock-shaft is reciprocatingly rotated said paddle will be vibrated, and alternatingly carry a measure of sand over each of the upturned ends of the paddle-chamber bottom to enter the distributing-chamber, and therefrom descend through the spout of the latter to the car-track substantially as shown and described.

4. The combination with the hopper H, having the interior areas h^3, and h^4, of the paddle-chamber A, having the concave bottom P, and the top opening O; the sand-distributing chamber D, arranged in front of the hopper, and provided with the spout C, and constructed to connect with the paddle-chamber over the upturned edges of the paddle-chamber bottom, and the paddle P^2, provided with means to be vibrated in said paddle-chamber, substantially as described.

5. The combination with the hopper H, having the interior areas h^3, and h^4, of the paddle-chamber A, having the concave bottom P, and top opening O; the sand-distributing chamber D, provided with the spout C, and connecting with the paddle-chamber over the upturned edges of the latter; the rock-shaft S; and the paddle P^2, provided with the agitator L, constructed and arranged to be operated substantially in the manner as and for the purposes set forth.

Signed at the city of Troy, New York, this 1st day of December, 1896, in the presence of the two witnesses whose names are hereto written.

ALBERT W. HAM.

Witnesses:
W. E. HAGAN,
CHARLES S. BRINTNALL.