March 6, 1962 D. C. MUESSEL 3,023,859

METAL CONSTRUCTION ELEMENT

Original Filed June 24, 1957

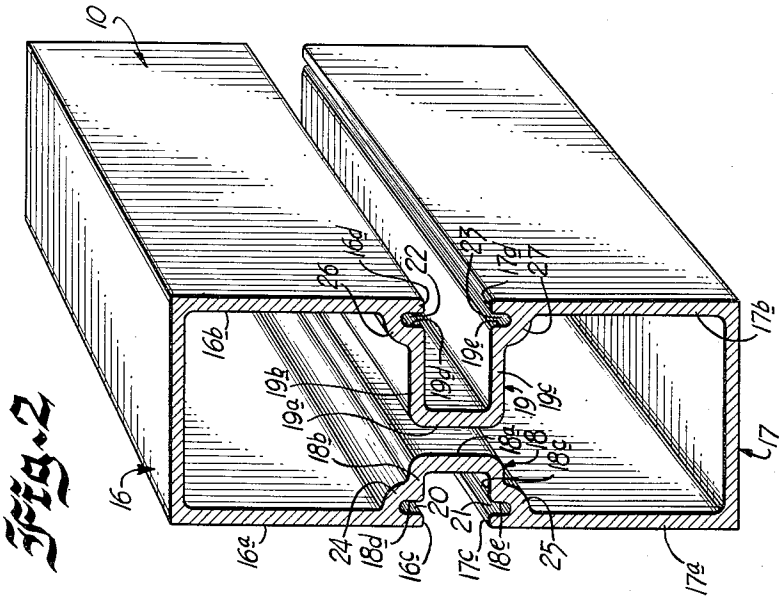

FIG. 2

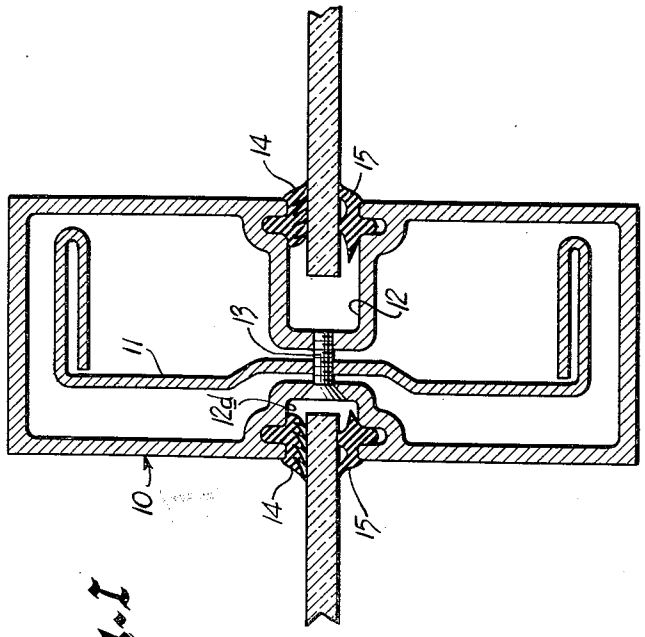

FIG. 1

INVENTOR.
Dan C. Muessel
BY
Mason, Kolehmainen, Rathburn and Wyss
Attorneys.

United States Patent Office

3,023,859

Patented Mar. 6, 1962

1

3,023,859

METAL CONSTRUCTION ELEMENT

Dan C. Muessel, Niles, Mich., assignor to Kawneer Company, Niles, Mich., a corporation of Delaware

Original application June 24, 1957, Ser. No. 667,496, now Patent No. 2,983,969, dated May 16, 1961. Divided and this application Sept. 7, 1960, Ser. No. 54,425

4 Claims. (Cl. 189—34)

The present invention relates to building construction elements and more particularly to a new and improved elongated extruded metal construction element of low cost construction which may be used for many different structural purposes in fabricating building and window frames. This application is a division of copending application Serial No. 667,496, filed June 24, 1957 now Patent No. 2,983,969 and assigned to the same assignee as the present invention.

It is an object of the present invention to provide a new and improved extruded metal construction element of low cost construction which may be used for a number of different purposes and which has a high degree of versatility.

It is another object of the invention to provide a new and improved extruded metal construction element of hollow rectangular section which is adapted to receive the edges of and support glass or other panel elements disposed on opposite sides of the section.

The invention, together with further objects and advantages thereof, will best be understood by reference to the following detailed description taken in connection with the accompanying drawings, in which:

FIG. 1 is a cross-sectional view of a vertical mullion embodying an elongated extruded metal construction element characterized by the features of the present invention; and

FIG. 2 is a cross-sectional view of the present improved extruded metal construction element.

Referring now to the drawings, and more particularly to FIG. 1 thereof, there is shown an elongated vertical mullion **10** of hollow tubular construction having respectively located in opposite sides thereof a set of glazing channels **12** and **12*d***. It will be noted that while the channel **12*d*** is substantially the same as channel **12**, i.e., it is provided with grooves in the side walls thereof; it is appreciably more shallow than the channel **12**. There is thus provided between the bottom portions of the channels **12** and **12*d*** a space in which may be mounted, if desired or required, a channel-shaped steel reinforcement bar **11**. As shown, the bar **11** is suitably attached to the mullion **10** by a plurality of spatially arranged screws **13** extending into suitable apertures in the bottom of the glazing channels **12** and **12*d***.

In using the vertical mullion **10** in a flush glazing arrangement in which a plurality of adjacent windows or panels are provided, the mullions **10** are spaced along the wall of the building and are so oriented that the deep channels **12** all face in the same direction, i.e., for each window there are provided opposing deep and shallow glazing channels. Therefore, the vertical mullions may all be installed before the glass panes are mounted in the unit. In order to mount the panes in the frames, the panes are each slidably moved at an angle into the bottom of the deep channel and then swung into place opposite the opposing channel **12*d***, the resilient gaskets **14** having previously been mounted in the channels **12** and **12*d***. Thereafter, the pane is slidably moved into the bottom of the shallow channel **12*d*** and resilient gaskets **15** are forced into place to complete the unit. It may thus be seen that by providing both a shallow and a deep glazing channel in each mullion **10**, sufficient space is provided between the opposing glazing channels **12** and

2

12*d* to accommodate the reinforcement **11**, if required, while at the same time minimizing the overall width of the mullion in the flush glazing design.

More specifically and as best shown in FIG. 2, the mullion **10** is in the form of an elongated extruded metal construction element having a generally rectangular hollow section made up of two external U-shaped parts **16** and **17** and two internal U-shaped parts **18** and **19** which are disposed within the section and are provided with base parts **18*a*** and **19*a*** which are disposed in substantially parallel spaced apart relationship. The external U-shaped parts **16** and **17** are respectively provided with legs **16*a***, **16*b*** and **17*a***, **17*b*** which extend toward each other in spaced apart parallel planes and have spaced apart ends adapted to receive the edges of the glass panel elements therebetween on opposite sides of the section. Thus, the legs **16*a*** and **17*a*** extend toward each other in the same plane and are provided with spaced apart ends or edges **16*c*** and **17*c*** which are spaced apart as shown to receive the edge of a panel element therebetween. Similarly, the legs **16*b*** and **17*b*** extend toward each other in another plane which is parallel to the plane occupied by the legs **16*a*** and **17*a*** and are provided with spaced apart ends or edges **16*d*** and **17*d*** to receive the edge of a second panel element therebetween.

As shown, the legs of the internal U-shaped parts **18** and **19** extend toward but are displaced from the adjacent leg ends of the external U-shaped parts. Thus, the internal U-shaped part **18** is provided with legs **18*b*** and **18*c*** which extend toward the leg ends **16*c*** and **17*c***, respectively, of the legs **16*a*** and **17*a***, and are respectively provided with ends **18*d*** and **18*e*** which are displaced from the leg ends **16*c*** and **17*c***. Similarly, the internal U-shaped part **19** is provided with legs **19*b*** and **19*c*** which extend toward the leg ends **16*d*** and **17*d***, respectively, of the legs **16*b*** and **17*b***, and are respectively provided with ends **19*d*** and **19*e*** which are displaced from the leg ends **16*d*** and **17*d***. As will be noted, the end surfaces of the leg ends **16*c*** and **16*d*** are substantially coplanar with the inner surfaces of the legs **18*b*** and **19*b*** and the end surfaces of the leg ends **17*c*** and **17*d*** are substantially coplanar with the inner surfaces of the legs **18*c*** and **19*c***. By virtue of this coplanar relationship, coupled with the displacing of the ends of the legs of the internal U-shaped parts from the ends of the legs of the external U-shaped parts, it becomes feasible to form the grooves **20**, **21**, **22** and **23** for receiving the resilient securing strips **14** and **15** by providing connecting parts **24**, **25**, **26** and **27** integrally to join the leg ends of the internal U-shaped parts with the legs of the external U-shaped parts at points spaced back from the ends of the last-mentioned legs. More specifically, the connecting part **24** is formed to extend at right angles to the legs **16*a*** and **18*b***, and integrally joins the leg **18*b*** with the leg **16*a*** at a point spaced back from the leg end **16*c*** to define the groove **20** between the leg ends **16*c*** and **18*d***. Similarly, the connecting part **25** is formed to extend at right angles to the legs **17*a*** and **18*c***, and integrally joins the leg **18*c*** with the leg **17*a*** at a point spaced back from the leg end **17*c*** to define the groove **21** between the leg ends **17*c*** and **18*e***. In a like manner, the connecting part **26** is formed to extend at right angles to the legs **16*b*** and **19*b***, and integrally joins the leg **19*b*** with the leg **16*b*** at a point spaced back from the leg end **16*d*** to define the groove **22** between the leg ends **16*d*** and **19*d***. Finally, the connecting part **27** is formed to extend at right angles to the legs **17*b*** and **19*c***, and integrally joins the leg **19*c*** with the leg **17*b*** at a point spaced back from the leg end **17*d***, thereby to define the groove **23** between the leg ends **19*e*** and **17*d***.

Having thus described the invention, what is claimed

and desired to be secured by Letters Patent of the United States is:

1. An integral elongated extruded metal construction element having a generally rectangular hollow section which comprises two external U-shaped parts, the legs of which extend toward each other in two spaced apart planes and are provided with spaced apart ends adapted to receive the edges of panel elements therebetween on opposite sides of said section, two oppositely facing internal U-shaped parts disposed within said section between said planes substantially at right angles to said external U-shaped parts and spanning the spaces between the leg ends of said external U-shaped parts to receive the edges of said panel elements therewithin, the legs of each of said internal U-shaped parts extending toward but being displaced from the adjacent leg ends of said external U-shaped parts, and connecting parts integrally joining the ends of the legs of the internal U-shaped parts and portions of the legs of the external U-shaped parts spaced inwardly from the ends of said last mentioned legs, thereby to define grooves adjacent the leg ends of the external and internal U-shaped parts for the reception of panel element securing means therewithin.

2. An extruded metal construction element as claimed in claim 1, wherein the inner facing surfaces of the legs of said internal U-shaped parts are substantially coplanar with the end surfaces of the adjacent ends of the legs of said external U-shaped parts, and wherein each of said connecting parts includes two integral portions extending substantially normal to the legs of the U-shaped parts to which they are respectively connected.

3. An integral elongated extruded metal construction element having a generally rectangular hollow section which comprises two external U-shaped parts, the legs of which extend toward each other in two spaced apart planes and are provided with spaced apart ends adapted to receive the edges of panel elements therebetween on opposite sides of said section, two internal U-shaped parts disposed within said section between said planes substantially at right angles to said external U-shaped parts and with their base portions facing each other and disposed in spaced apart relationship, the legs of each of said internal U-shaped parts extending toward but being displaced from the adjacent leg ends of said external U-shaped parts, and connecting parts integrally joining the ends of the legs of the internal U-shaped parts and portions of the legs of the external U-shaped parts spaced inwardly from the ends of said last mentioned legs, thereby to define grooves adjacent the leg ends of the first and second U-shaped parts for the reception of panel element securing means therewithin.

4. An integral elongated extruded metal construction element having a generally rectangular hollow section which comprises two identical external U-shaped parts, the legs of which extend toward each other in two spaced apart planes and are provided with equally spaced apart ends adapted to receive the edges of panel elements therebetween on opposite sides of said section, two internal U-shaped parts disposed within said section between said planes substantially at right angles to said external U-shaped parts and with their base portions disposed in substantially parallel spaced apart relationship, the inner facing surfaces of the legs of the internal U-shaped parts being coplanar with the end surfaces of the ends of the legs of the external U-shaped parts, the legs of each of said internal U-shaped parts extending toward but being displaced from the adjacent leg ends of said external U-shaped parts, and connecting parts integrally joining the ends of the legs of the internal U-shaped parts and portions of the legs of the external U-shaped parts spaced inwardly from the ends of said last mentioned legs, thereby to define grooves adjacent the leg ends of the external and internal U-shaped parts for the reception of panel element securing means therewithin, each of said connecting parts including two portions extending substantially normal to the legs of the U-shaped parts to which they are respectively connected.

No references cited.