July 23, 1957 T. J. MARCHESE 2,800,605

TRAVELING WAVE ELECTRON DISCHARGE DEVICES

Filed Feb. 8, 1954

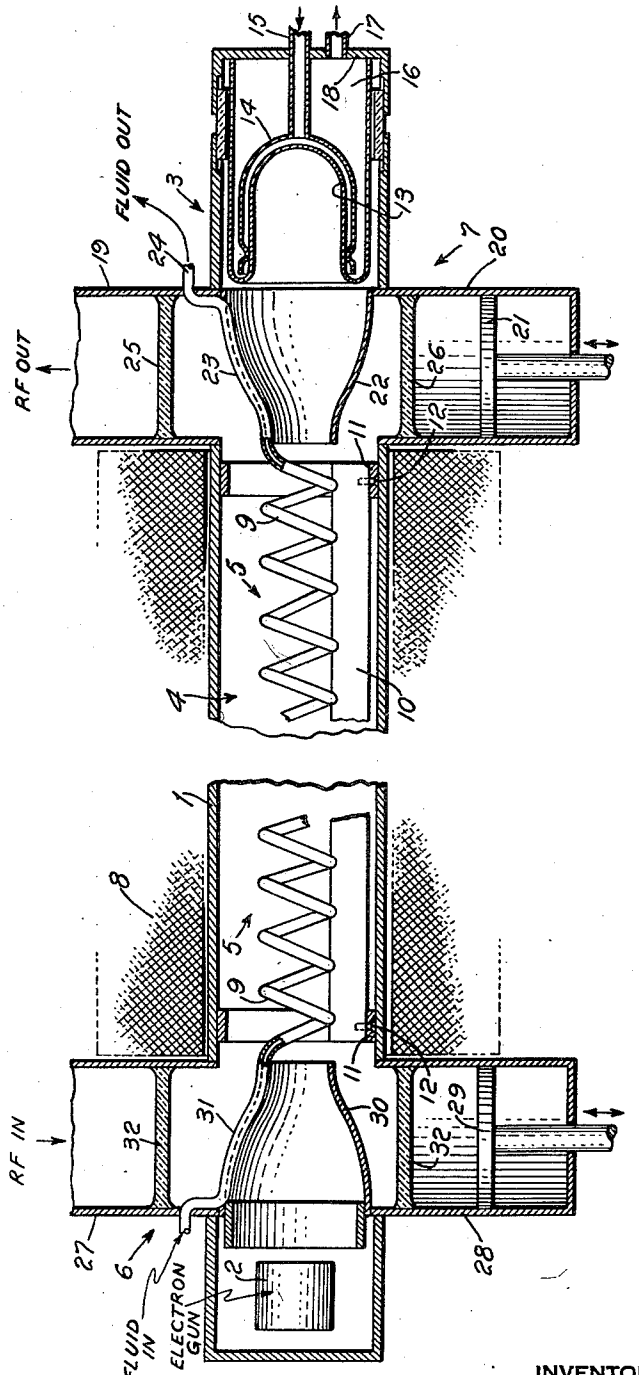

INVENTOR
THEODORE J. MARCHESE
BY Percy P. Lantzy
ATTORNEY

United States Patent Office 2,800,605 Patented July 23, 1957

2,800,605

TRAVELING WAVE ELECTRON DISCHARGE DEVICES

Theodore J. Marchese, Nutley, N. J., assignor to International Telephone and Telegraph Corporation, Nutley, N. J., a corporation of Maryland

Application February 8, 1954, Serial No. 408,915

11 Claims. (Cl. 315—3.5)

This invention relates to traveling wave electron discharge devices and more particularly to a novel means for matching a helical transmission line to a waveguide applicable for utilization in both high and low power type traveling wave electron discharge devices.

The traveling wave type of tube is particularly useful in wide band microwave systems since it is capable of amplifying radio frequency energy over an unusually wide band of frequencies. The tube includes a form of transmission line, usually a helix, for transmission of microwave energy for interaction with an electron beam closely associated with the transmission line. The helical characteristic of the transmission line is such that the axial velocity of microwave signals conducted along the helical path is approximately the same as or slightly slower than the velocity of the electrons of the beam, whereby the electric field of the microwave signals interact with the electron beam for amplification of the microwave signals.

Traveling wave amplifier tubes heretofore proposed have been employed for amplification of relatively low power and have utilized heat radiation from the components of the electron discharge device to provide that amount of cooling necessary for achievement of an efficient amplifier. As is well known in the art, the transmission line and the electron beam collector must be capable of dissipating that amount of heat developed thereon by collision of the electrons of the beam which in the past, has been accomplished by heat radiation where the power handling capabilities of the electron discharge device are relatively low. However, when the power handling capabilities of a traveling wave electron discharge device is increased above say a kilowatt, it is necessary to provide a coolant to dissipate that quantity of heat present on the transmission line and the collector anode caused by collision of the electrons of the projected beam with these components hereinabove mentioned.

An object of the present invention is the provision of a novel means for matching a helical transmission line to a waveguide structure for utilization in traveling wave electron discharge devices.

Another object of this invention is the provision of a novel transition means for matching the input and output portions of a helical propagating structure incorporated in a traveling wave electron discharge device to input and output waveguide transmission lines, respectively. The hollow configuration of said transition means substantially reduces interception of the electron beam by the transition or matching section and is capable of being adapted to include a passage therein to cooperate in circulating a fluid coolant through a helical propagating structure formed from hollow tubing.

A feature of this invention provides for the utilization of a doorknob type transition section of hollow generally frusto-conical form at the output of a traveling wave electron discharge device for transition of radio frequency energy from the helical propagating structure to a waveguide transmission line, the configuration of said section allowing substantially uninterrupted passage of the electron beam therethrough.

Another feature of this invention provides the utilization of a doorknob type transducer section and a waveguide shorting section at each extremity of the helical propagating structure of a traveling wave electron discharge device to provide a broadband impedance match between external waveguides and the helical propagating structure, said shorting section having a longitudinally moving element therein for precise control of the match.

The above-mentioned and other features and objects of this invention will become more apparent by reference to the following features taken in conjunction with the accompanying drawing, in which the single figure of this drawing is a schematic sectional view of the traveling wave electron discharge device constructed in accordance with the principles of this invention.

In the past, doorknob type transitions have been utilized for transition of radio frequency energy from a coaxial line to a waveguide. The only limit on the power which may be safely transmitted by a coaxial line to waveguide transmission under given conditions should be that imposed by the breakdown voltage of the coaxial line alone. Although the cross-bar type transition section is capable of carrying more than twice the power of which the stub circuit probe transitions are capable, this desired maximum power limit was not obtained with either design. In order to achieve the maximum power limit, a transition was developed in which the center conductor of the coaxial line is terminated on the opposite side of the waveguide in a knob of the proper size to permit impedance match and of a streamlined shape to increase the power required for breakdown. This general type of transition is widely known as the doorknob transition and frequently is designated by more colorful names to define different shapes of the doorknobs. While this type of transition is well known for transition of radio frequency energy from a coaxial line to a waveguide, or vice versa, it has been discovered that the doorknob termination heretofore employed with the central conductor of a coaxial line may be adapted for matching a helical propagating structure of a traveling wave electron discharge device to a waveguide transmission line for either coupling energy into the propagating structure or coupling the amplified energy from the propagating structure.

The single figure of the drawing illustrates a traveling wave tube capable of amplifying radio frequency energy with a power handling capability in the order of 10 kilowatts. The traveling wave device of this invention is shown to comprise an envelope 1 enclosing the internal structure thereof consisting of a non-magnetic material, such as Monel. At one end of envelope 1 is disposed an electron gun unit 2 for projecting an electron beam along the axis of envelope 1 towards the collector assembly 3 disposed at the opposite end of envelope 1. Intermediate electron gun unit 2 and collector assembly 3 is disposed an interaction section 4 including a helical propagating structure 5 adjacent the axial path of the electron beam. The action of the propagating structure 5 is to propagate radio frequency energy therealong in an interacting relation with the electrons included in the projected electron beam. Adjacent the electron gun unit 2 is disposed an input wave coupling means 6 for coupling radio frequency energy on to propagating structure 5 and adjacent the collector assembly 3 is disposed an output wave coupling means 7 for removal of the amplified radio frequency energy from the propagating structure 5, said coupling means having that characteristic which substantially reduces reflected energy to an insignificant

quantity and having a shape conducive to substantially eliminating the interception of the electrons of the projected beam by components of coupling means **6** and **7**.

Gun unit **2** is of any known configuration capable of projecting a uniform pencil-like electron beam axially of envelope **1** and in interacting relation with propagating structure **5**. As is known, electrons have a tendency to spread under the well known phenomenon of like charges repelling each other. To overcome this spreading of the electron beam, an axial magnetic field is provided of uniform distribution to provide a collimation of the electron beam along the axis of envelope **1**. Such a magnetic field is provided as indicated in the drawing by a solenoid **8**, but may be accomplished by employing a permanent magnet electron optical system similar to that disclosed in the copending application of J. H. Bryant, Serial No. 318,060, filed October 31, 1952, or in the copending application of J. H. Bryant and H. W. Cole, Serial No. 321,342, filed November 19, 1952.

Referring more particularly to interaction section **4**, propagation structure **5** is illustrated as including helical transmission line **9** and supporting members **10** of ceramic material to maintain said transmission line in a coaxial arrangement with respect to the axis of envelope **1**. Transmission line **9** is formed by configuring a hollow tubing into a helical shape whereby the passage internally of the tubing will carry a fluid coolant to provide adequate dissipation of the heat produced by line **9** intercepting electrons of the electron beam. Three support members **10** are secured at a 120° spacing by a circular yoke **11** and screws **12** disposed at each extremity of rods **10**. If the yoke **11** is made of spring material, such as molybdenum, the assembly may be spring loaded. An alternative to the positioning of rods **10** is to increase the radial thickness of the support members to engage the envelope **1** in a manner to hold rods **10** on a 120° spacing.

After giving up given quantities of its energy to amplify the radio frequency wave energy the electrons of the beam leave the influence of the collimating magnetic field and are allowed to spread under their own action to enable a distribution of the remaining energy over a sufficiently large surface. This dissipation surface is provided in collector assembly **3** by the collector anode **13**. Anode **13** has passed around its exterior surface a liquid coolant. The passage for said coolant is provided by sleeve **14** enclosing anode **13**, but not tightly fitted thereto to provide a coolant passage therearound. A fluid coolant, such as water, is passed through tube **15**, the passage defined by the exterior surface of anode **13** and the sleeve **14**, coolant reservoir **16**, and hence to an external circulating system by means of nipple **17** appropriately disposed in end cap **18**. In this manner, the heat developed by an electron beam having a beam power in the order of 30 kw. for high power operation of a traveling wave tube bombarding anode **13** will be dissipated by the coolant circulation.

In high power helix-type traveling wave tubes specific cooling and insulating problems arise which call for solutions different from those used in low-power tubes. In a tube operating at the 5 to 10 kilowatt level, the beam power will be in the order of 30 kilowatts. If one percent of this power should be intercepted by helical transmission line **9** or some other element of small area, the heat produced will lead to excessive temperature unless a fluid coolant is employed. To enable the fluid cooling of line **9**, the conductor forming line **9** is tubular in cross section in order to carry the coolant and the matching means for line **9** includes means for introducing and removing the coolant to the helix. Due to the relatively high beam power encountered in high power traveling wave tubes, special consideration must be given to the cooling of anode **13** and the configuration thereof to assure an even distribution of electrons bombarding said anode upon spreading after leaving the influence of the magnetic field established by the magnetic field producing means **8**. Since the means **8** is only coextensive of interaction section **4**, the electrons of the beam will tend to spread in the output wave coupling means **7**. To assure minimum interception of the beam by the matching means included in means **7**, the configuration thereof should conform approximately to the profile of the beam intermediate section **4** and anode **13**.

Output wave coupling means **7** includes an output waveguide **19**, a stub portion **20** adapted to have therein a tuning element **21** to enable a precise adjustment of the transition from line **9** to waveguide **19**. The waveguide components are illustrated to be of the rectangular type, but conceivably may have a circular, elliptical, or other cross section depending upon the application thereof. The main transition element **22** is illustrated as a doorknob transducer comprising a hollow generally frustoconical member inserted in waveguide **19** coaxially and supported by envelope **1**. The profile of the inner surface of transducer **22** corresponds approximately with the shape of the spreading electron beam and therefore minimizes to an insignificant amount the interception of the electron beam by element **22** enabling practically all electrons of the beam to arrive at collector **13**.

The wall of the transducer **22** is illustrated as including a passage **23** therein for the fluid coolant employed in cooling helix **9**, said passage extending to the atmospheric portion of the traveling wave electron discharge device by means of nipple **24**. An alternative scheme would include the extension of the tubing forming line **9** in a manner to be flush with the surface of transducer **22** and brazed thereto for sake of rigidity.

In terminating or matching the impedance of helix **9**, particularly at the output end thereof, it is important that reactive currents and voltages be kept as small as possible in order to avoid the effects which these reactive components may produce. The doorknob transition affords such a termination. Doorknob transducer **22** may be thought of as an inverted stub in a crossed helical line waveguide transition. The purpose of this stub is to match the susceptance of the helical line extending into the waveguide which excites the waveguide. Further, as might be expected, this arrangement is slightly less frequency-sensitive than one in which the susceptance matching the waveguide antenna depends upon the electrical characteristics of an appreciable length of transmission line. This type of construction has very successfully improved the power-carrying capability of the helix to waveguide transition to the point where it is limited only by the breakdown power of the waveguide **19**.

When line **9** is matched to waveguide **19** only by the dimensions of doorknob **22**, the transition section is a comparatively narrow band; that is, they have a VSWR, voltage standing wave ratio, of less than 1.10 for a bandwidth of only a few percent. On its surface, this type of transition may seem to be contradictory to the broadband feature of a traveling wave tube. However, consider the application of a tube as herein described in television equipment. Assume an operating frequency in the order of 500 to 600 megacycles. A one percent bandwidth at the transition means **22** would provide a bandwidth of between 5 to 6 megacycles which is definitely sufficient for transmission of a television signal. If a broader bandwidth is desired, a mismatched transition section could be provided and matched over a broader band by utilization of stub section **20** and the tuning element **21** therein.

Tuning element **21** serves a purpose other than broadbanding a traveling wave device as herein described. The doorknob transitions inherently tend to be extremely critical as to dimensions for achieving a perfect match. Any resulting mismatch due to inaccurate dimensioning of element **22** may be compensated for by appropriate adjustment of element **21**. Further, by adjusting element **21** the one percent bandwidth of transition **22** may

be shifted with the broader bandwidth of the traveling wave tube.

Waveguide **19** and stub portion **20** include internally thereof vacuum seals **25** and **26**, respectively, to assure a vacuum system within the confines of envelope **1**. Seals **25** and **26** are composed of a suitable dielectric material capable of confining a vacuum system and yet has a low impedance with respect to the radio frequency energy propagated therethrough.

Input coupling means **6** is illustrated as including a waveguide **27**, a stub portion **28** including an adjustable shorting probe **29** in a cooperating relationship with doorknob transducer **30** to appropriately translate radio frequency energy to helical transmission line **9** from waveguide **27** much in the same manner as described in conjunction with output means **7**. Transducer **30** may include as an integral component therein a passage **31** to cooperate with passage **23** in circulating the fluid coolant through line **9**. A vacuum closure for waveguide **27** and stub portion **28** is assured by dielectric seals **32** and **33**, respectively.

The input coupling means **6** has been illustrated and described as including a doorknob type of transition means. However, if the electron beam is produced from a cathode in unit **2** originally collimated with respect to the axis of envelope **1**, any of the known types of input transition devices may be employed in means **6** to translate energy from waveguide **27** to line **9**.

The transducing means of this invention has been described herein with reference to a high power traveling wave electron discharge device. It is to be clearly understood that this description is made only by way of example and that said transducing means may be utilized in low power traveling wave electron discharge devices without departing from the spirit of this invention. It is to be clearly understood that this description is made only by way of example and not as a limitation to the scope of my invention as set forth in the objects thereof and in the accompanying claims.

I claim:

1. A traveling wave electron discharge device comprising a housing, an electron gun unit disposed at one end of said housing to project an electron beam along an axial path within said housing, a collector anode disposed at the other end of said housing to collect the electrons of said beam, a wave propagating structure disposed coaxially of said path for transmission of radio frequency energy in interacting relation with the electrons of said beam, input coupling means disposed adjacent said gun unit to couple radio frequency energy onto said propagating structure, and an output coupling means disposed adjacent said collector anode including an output waveguide and a hollow generally frusto-conical transition means disposed coaxially of said beam in coupling relation with said output waveguide and said propagating structure to remove radio frequency energy therefrom, the smaller end of said frusto-conical transition means being coupled to said propagating structure and the larger end of said frusto-conical transition means being disposed adjacent said collector electrode and submersed in the field of said output waveguide.

2. A device according to claim 1, wherein said output coupling means further includes a shorting stub communicating with said housing at a point adjacent said waveguide and said transition means to provide a broadband impedance match between said propagating structure and said output waveguide.

3. A device according to claim 1, wherein said transition means comprises a frusto-conical member disposed axially of said housing with the base thereof supported by said housing and the small end thereof coupled to said propagating structure, said output waveguide being coupled to said housing at a point radially disposed with respect to said frusto-conical means.

4. A device according to claim 1, wherein said input coupling means includes an input waveguide, a second hollow generally frusto-conical transition means disposed coaxially of said beam, and a shorting stub adjacent said input waveguide for cooperation with said transition means to provide a broadband impedance match between said input waveguide and said propagating structure, the smaller end of said frusto-conical transition means being coupled to said propagating structure and the larger end of said frusto-conical transition means beng disposed adjacent said electron gun unit and submersed in the field of said input waveguide.

5. A traveling wave electron discharge device comprising a housing, an electron gun unit disposed at one end of said housing to project an electron beam along an axial path within said housing, a collector anode disposed at the other end of said housing to collect the electrons of said beam, a wave propagating structure including a helical transmission line of hollow tubing to enable the passage of a fluid coolant therethrough disposed coaxially of said path for transmission of radio frequency energy in interacting relation with the electrons of said beam, input coupling means disposed adjacent said gun unit to couple radio frequency energy onto said propagating structure, and an output coupling means disposed adjacent said collector anode including an output waveguide and a hollow generally frusto-conical doorknob transition means disposed coaxially of said beam in coupling relation with said output waveguide and said structure to transfer radio frequency energy from said propagating structure to said output waveguide, the smaller end of said frusto-conical transition means being coupled to said propagating structure and the larger end of said frusto-conical transition means being disposed adjacent said collector electrode and submersed in the field of said output waveguide.

6. A device according to claim 5, wherein said transition means includes a passage in the wall thereof coupled to said hollow tubing for circulation of the fluid coolant through said helical transmission line.

7. A traveling wave electron discharge device comprising a housing, an electron gun unit disposed at one end of said housing to project an electron beam along an axial path within said housing, a collector anode disposed at the other end of said housing to collect the electrons of said beam, a wave propagating structure including a helical transmission line disposed coaxially of said path for transmission of radio frequency energy in interacting relation with the electrons of said beam, input coupling means disposed adjacent said gun unit including an input waveguide and a first generally frusto-conical transition means disposed coaxially of said beam in coupling relation with said input waveguide and said structure to couple radio frequency energy to said structure, the smaller end of said frusto-conical transition means being coupled to said propagating structure and the larger end of said frusto-conical transition means being disposed adjacent said electron gun unit and submersed in the field of said input waveguide, and an output coupling means disposed adjacent said collector anode including an output waveguide and a second generally frusto-conical transition means disposed coaxially of said beam in coupling relation with said output waveguide and said structure to remove radio frequency energy from said propagating structure, the smaller end of said frusto-conical transition means being coupled to said propagating structure and the larger end of said frusto-conical transition means being disposed adjacent said collector electrode and submersed in the field of said output waveguide.

8. A traveling wave electron discharge device comprising a housing, an electron gun unit disposed at one end of said housing to project an electron beam along an axial path within said housing, a collector anode disposed at the other end of said housing to collect the electrons of said beam, a wave propagating structure disposed coaxially of said path for transmission of radio

frequency energy in interacting relation with the electrons of said beam, input coupling means disposed adjacent said gun unit including an input waveguide and a first generally frusto-conical transition means disposed coaxially of said beam in coupling relation with said input waveguide and said structure to couple radio frequency energy to said structure, the smaller end of said frusto-conical transition means being coupled to said propagating structure and the larger of said frusto-conical transition means being disposed adjacent said electron gun unit and submersed in the field of said input waveguide, and an output coupling means disposed adjacent said collector anode including an output waveguide and a second generally frusto-conical transition means disposed coaxially of said beam in coupling relation with said output waveguide and said structure to extract radio frequency energy from said propagating structure, the smaller end of said frusto-conical transition means being coupled to said propagating structure and the larger end of said frusto-conical transition means being disposed adjacent said collector electrode and submersed in the fied of said output waveguide.

9. In traveling wave electron discharge devices having an envelope, an electron gun unit disposed at one end of said envelope to project an electron beam along an axial path within said envelope, and a collector anode disposed at the other end of said envelope to collect the electrons of said beam; an interaction section including a helical transmission line disposed coaxially of said path and intermediate said gun unit and said collector for transmission of radio frequency energy in interacting relation with the electrons of said beam, means disposed adjacent said gun unit and in coupled relation to said helical line including a first waveguide and a first generally frusto-conical transition member disposed coaxially of said beam and submersed in the field of said first waveguide to couple radio frequency energy to said helical

line, the smaller end of said frusto-conical transition means being coupled to said helical line and the larger end of said frusto-conical transition means being disposed adjacent said electron gun unit, and means disposed adjacent said collector and in coupled relation to said helical line including a second waveguide and a second generally frusto-conical transition member disposed coaxially of said beam and submersed in the field of said second waveguide to couple radio frequency energy from said helical line, the smaller end of said frusto-conical transition means being coupled to said helical line and the larger end of said frusto-conical transition means being disposed adjacent said collector electrode.

10. In devices according to claim 9, wherein said helical line is of hollow tubing and said first and second transition members include a passage in the wall thereof in connection with said tubing for circulation of a fluid coolant through said interaction section.

11. In devices according to claim 9, wherein each of said coupling means further includes a shorting stub located adjacent the corresponding transition member to provide a broadband impedance match between said helical line and said waveguide, said stub including an adjustable shorting element movable longitudinally of said stub for vernier control of said impedance match.

References Cited in the file of this patent

UNITED STATES PATENTS

1,957,423	Freeman	May 1, 1934
1,985,324	McCullough	Dec. 25, 1934
2,476,732	Hollingsworth et al.	July 19, 1949
2,595,698	Peter	May 6, 1952
2,602,148	Pierce	July 1, 1952
2,637,775	Lund	May 5, 1953
2,683,256	Kumpfer	July 6, 1954
2,740,917	Haeff	Apr. 3, 1956