Jan. 19, 1943. P. L. SMITH 2,308,785

GOLF PRACTICE PUTTING DEVICE

Filed April 26, 1941

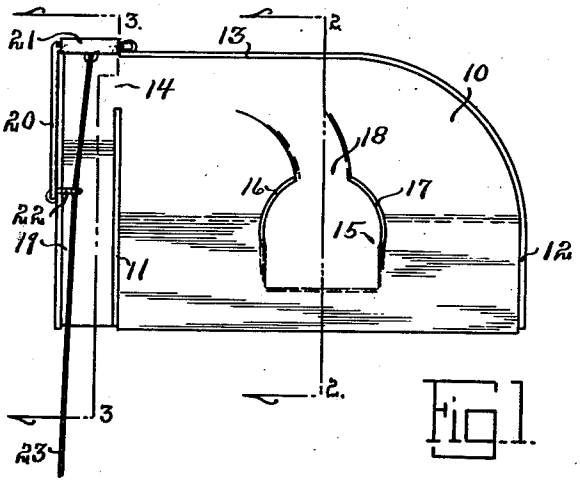

Fig. 1.

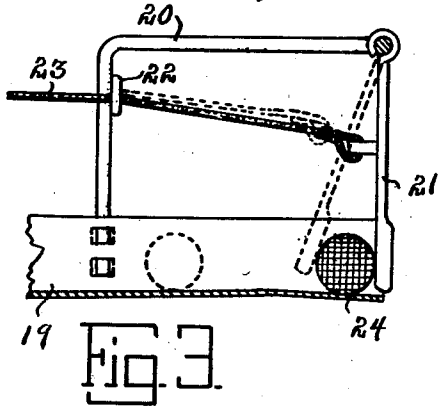

Fig. 3.

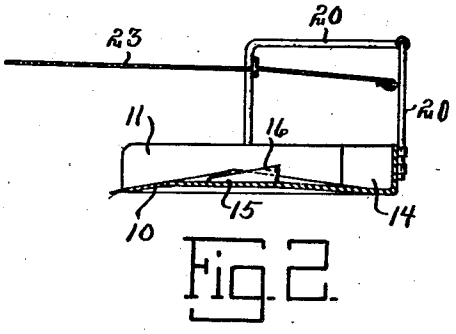

Fig. 2.

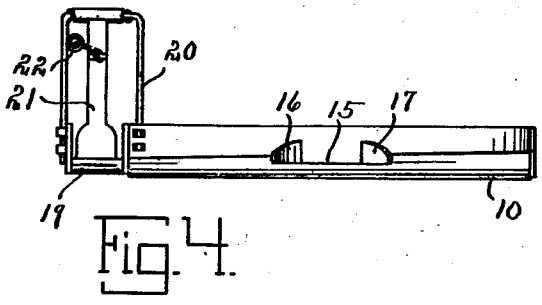

Fig. 4.

INVENTOR.
PAUL L. SMITH
BY
Dick, Bailey & Fletcher

Patented Jan. 19, 1943 2,308,785

UNITED STATES PATENT OFFICE

2,308,785

GOLF PRACTICE PUTTING DEVICE

Paul L. Smith, Des Moines, Iowa

Application April 26, 1941, Serial No. 390,480

5 Claims. (Cl. 273—36)

The principal object of this invention is to provide a golf practice putting cup that has a manually operated device for returning the golf balls to the user; said device being controlled by the user at substantial distances from the cup.

A further object of this invention is to provide a golf practice putting cup that has a manually operated device for returning golf balls at different distances from the cup.

A still further object of this invention is to provide a golf practice putting cup of the return ball type that has a low receiving cup relative to the surface over which the golf ball travels.

A still further object of this invention is to provide a golf practice putting cup that has associated therewith a rope controlled paddle for striking and returning the golf ball to the user.

A still further object of this invention is to provide a golf practice putting cup that is economical in manufacture and durable in use.

These and other objects will be apparent to those skilled in the art.

My invention consists in the construction, arrangement and combination of the various parts of the device, whereby the objects contemplated are attained as hereinafter more fully set forth, pointed out in my claims and illustrated in the accompanying drawing, in which:

Fig. 1 is a top plan view of my device ready for use.

Fig. 2 is a cross sectional view of my golf practice putting cup taken on line 2—2 of Fig. 1.

Fig. 3 is a cross sectional view of my device taken on line 3—3 of Fig. 1 and more fully illustrating my device.

Fig. 4 is a front elevational view of my golf practice putting device.

Golf practice putting cups of the automatic ball return type are old. The chief objections to such devices, however, are that the putting cup is positioned too high, the approach to the cup was too steep, and there was no way of regulating the distance the ball returns. I have overcome such objections as will be appreciated and as will be hereinafter more fully set forth.

Referring to the drawing, I have used the numeral 10 to generally designate the receiving platform having the two side walls 11 and 12 and the back wall 13. The back wall 13 and side wall 12 meet in a curved path as shown in Fig. 1. The front portion of this platform extends gradually upwardly and rearwardly toward the back wall 13 to a transverse line near the center of the platform as shown in Fig. 2. From this line, the platform extends gradually downwardly and rearwardly toward the back wall 13. This rear portion of the platform that extends gradually downwardly also slopes to the left. The wall 11 does not extend completely to the back wall 13, thereby providing a ball escape opening on the rear left corner of the platform and which I have designated by the numeral 14. The numeral 15 designates a flat portion in the central portion of the table 10 and which slopes slightly to the rear, but has a top surface plane below that of the top surface plane of the platform 10 at each side of it as shown in Fig. 4. The numerals 16 and 17 designate two curved walls at each side of the portion 15. These curved walls 16 and 17 do not meet at their rear ends in order to provide a ball escape opening 18. This flat portion 15 and walls 16 and 17 form the cup portion of the device. The forward straight marginal edge of the platform extends slightly below the plane of any other part of the platform in order that this sharpened edge will always rest closely adjacent the surface upon which it is supported. Obviously if a struck golf ball enters the cup portion 14 or rolls past the center transverse crest of the platform, it will roll toward the back of the device and through the opening 14. The numeral 19 designates a trough member formed on the left side of the device and extending from the rear end of the device slightly upwardly and forwardly and then downwardly and forwardly as shown in Fig. 3. This trough portion is open at both ends, communicates with the ball escape opening 14 and one of its side walls is the common wall 11 of the platform as shown in Fig. 3. By this construction, a ball passing through the escape opening 14 will pass into the rear end of the trough and come to rest in the rear end of the trough. The numeral 20 designates a bracket rod secured by any suitable means to the left rear corner of the device and supporting a paddle 21 which has its upper end hingedly secured by any suitable means to the bracket rod. The numeral 22 designates an eye secured to the member 20. The numeral 23 designates a cable or like flexible member having one end secured to the central portion of the paddle 21, its length passing through the eye 22 and its free end extending forwardly to the vicinity of the one using the device. The paddle 21 will normally by gravity hang downwardly back of the golf ball 24 as shown in Fig. 3. By pulling the rope 23 the lower end of the paddle 21 will be moved forwardly as shown by dotted lines in Fig. 3, thereby

casting the ball from the trough with such velocity that it will roll to the vicinity of the user of the device. If the user is not very far from the device, he will pull the cable somewhat slowly, but if he is considerable distance from the device, he will then pull the cable quickly in order to throw the ball with more force. By this device, the distances the ball is returned is under the complete regulation of the user. If desired, he can tie the end of the cable to his wrist which will not interfere with his putting. To have the ball returned to him, it is merely necessary to pull the cable accordingly. As the golf ball is manually forced by the user to a return position, the platform 10 does not have to be very steep, but merely steep enough so that the ball passing over the crest of the device or into the cup 15 will by gravity slowly roll into the rear end of the trough.

Although I have described my device as a golf practice putting device, it is obvious that it may be used as a localized golf game either inside a building or in the open.

Some changes may be made in the construction and arrangement of my improved golf practice putting device without departing from the real spirit and purpose of my invention, and it is my intention to cover by my claims any modified forms of structure or use of mechanical equivalents which may be reasonably included within their scope.

I claim:

1. In a device of the class described, a platform having vertical back and side walls and a rear portion sloping downwardly and laterally, a trough member communicating with the rear corner portion of said platform, a paddle member operatively hingedly secured to said trough member, a cable connected to said paddle to facilitate the manual movement of said paddle, and a cup portion formed in the central portion of said platform and communicating with the rear portion of said platform.

2. In a device of the class described, a platform having vertical rear and side walls and a rear portion sloping downwardly, a ball receiving member capable of receiving a ball from the rear portion of said platform, a paddle member operatively hingedly secured to said ball receiving member, a cable secured to said paddle to facilitate the manual movement of said paddle, a flattened portion in the central area of said platform, and curved side walls embracing said flattened area, spaced apart from each other and mounted on said platform.

3. In a device of the class described, a platform having its forward end portion gradually sloping upwardly and its rear end portion gradually sloping downwardly, a side wall, a back wall and a second side wall on said platform, a ball escape opening between one of said side walls and said back wall, a cup portion on said platform having a ball escape opening at its rear, a compartment communicating with said first mentioned ball escape opening, a paddle member operatively hingedly secured to said platform, and a cable secured to said paddle.

4. In a device of the class described, a platform having its forward end portion gradually sloping upwardly and its rear end portion gradually sloping downwardly, a side wall, a back wall and a second side wall on said platform, a ball escape opening between one of said side walls and said back wall, a cup portion on said platform having a ball escape opening at its rear, a compartment communicating with said first mentioned ball escape opening, a paddle member operatively hingedly secured to said platform, and a cable secured to the central portion of said paddle.

5. In a golf practice putting device, a platform having its forward portion sloping upwardly and its rear portion sloping downwardly, a retaining wall at the back and sides of said platform, two spaced apart walls on the central area of said platform, a ball receiving member at the rear of said platform, and a golf ball striking element associated with said ball receiving member.

PAUL L. SMITH.