Aug. 21, 1928. 1,681,373

H. M. SMITH

COMBINATION STOP ACTION FOR ORGANS

Filed Aug. 19, 1926 3 Sheets-Sheet 1

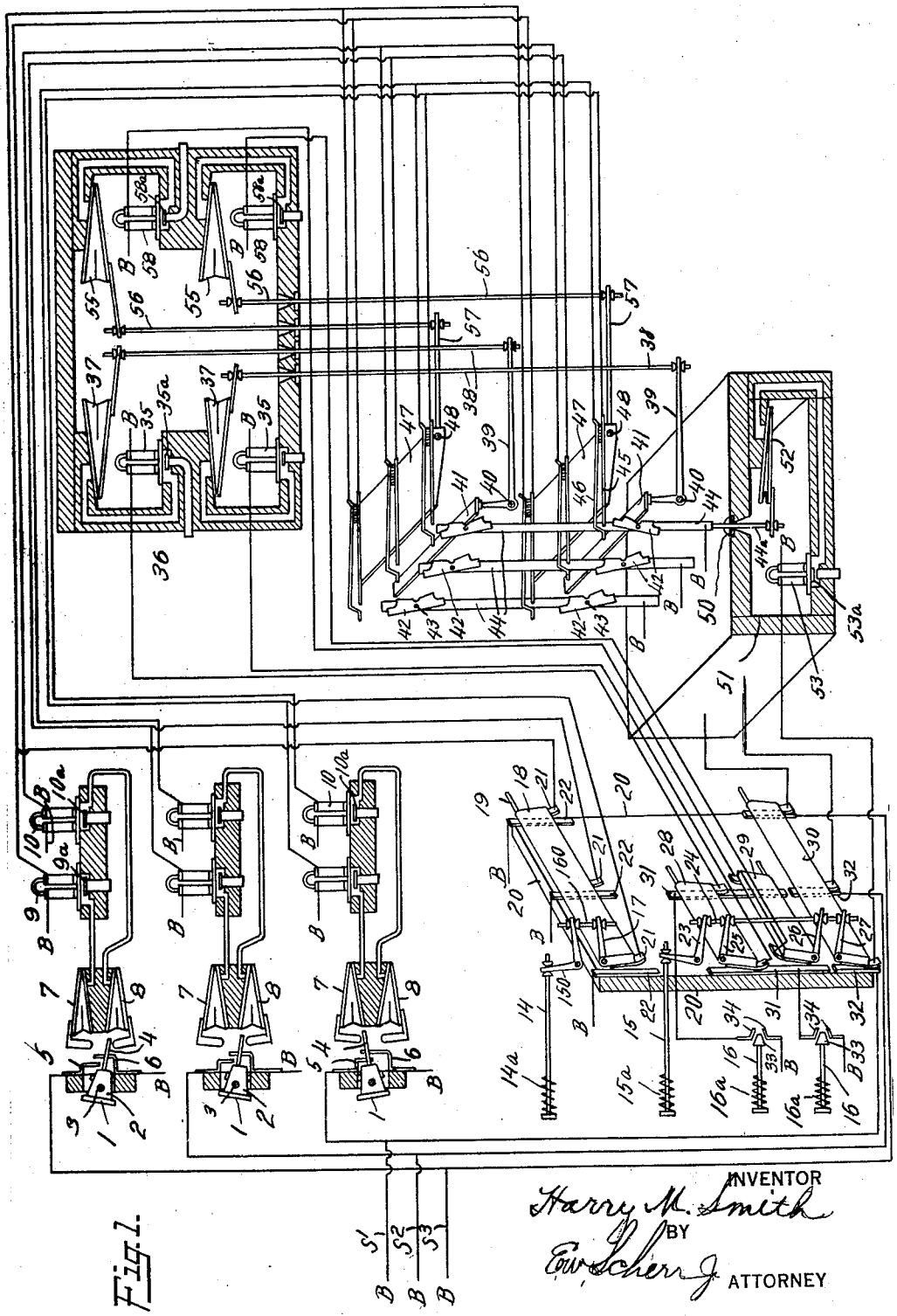

Fig. 1.

INVENTOR
Harry M. Smith
BY
Edw. Scherr Jr.
ATTORNEY

Aug. 21, 1928. 1,681,373

H. M. SMITH

COMBINATION STOP ACTION FOR ORGANS

Filed Aug. 19, 1926 3 Sheets-Sheet 2

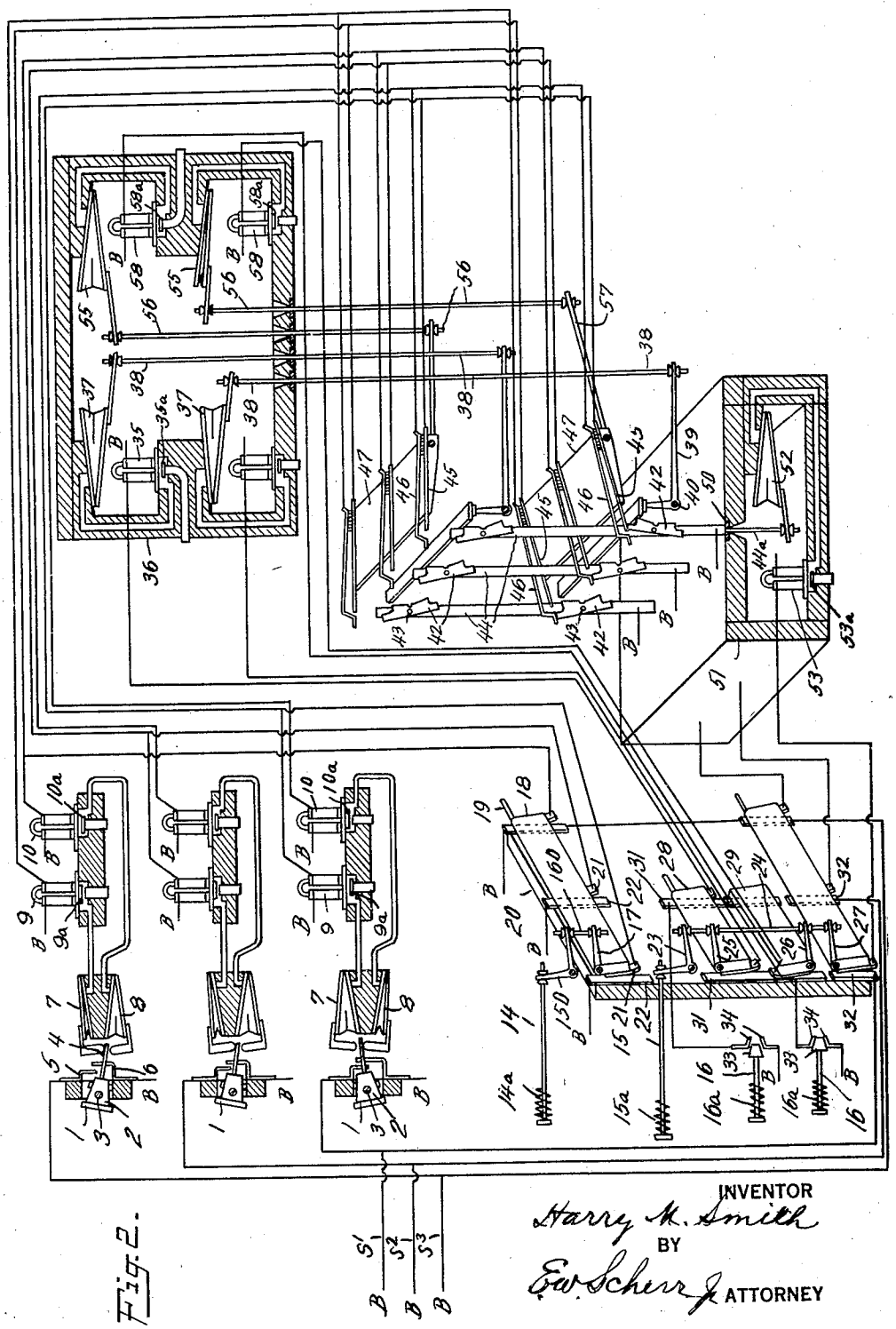

Fig. 2.

INVENTOR
Harry M. Smith
BY
Ewa Scherr ATTORNEY

Aug. 21, 1928. 1,681,373

H. M. SMITH

COMBINATION STOP ACTION FOR ORGANS

Filed Aug. 19, 1926 3 Sheets-Sheet 3

Fig. 3.

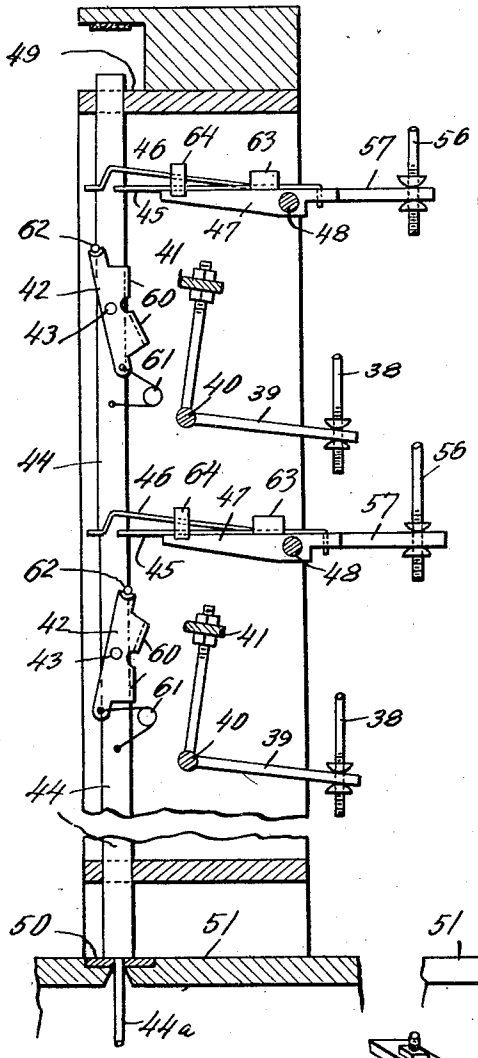

Fig. 4.

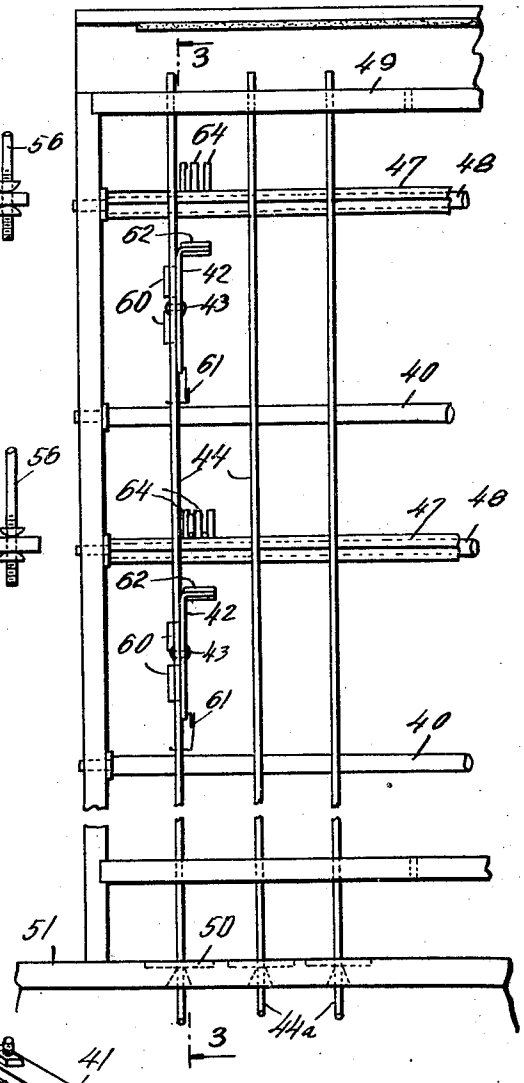

Fig. 5.

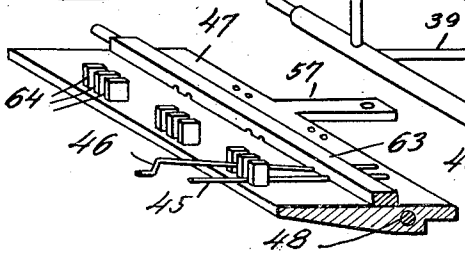

Fig. 6.

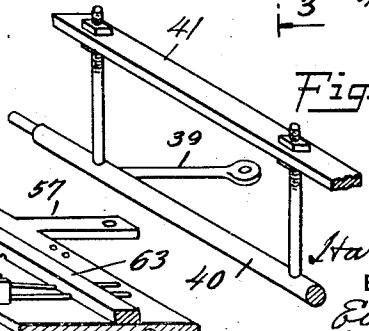

INVENTOR
Harry M. Smith
BY
E. A. Schers Jr.
ATTORNEY

Patented Aug. 21, 1928. 1,681,373

UNITED STATES PATENT OFFICE.

HARRY M. SMITH, OF CRANFORD, NEW JERSEY, ASSIGNOR TO THE AEOLIAN COMPANY, A CORPORATION OF CONNECTICUT.

COMBINATION STOP ACTION FOR ORGANS.

Application filed August 19, 1926. Serial No. 130,206.

My present invention relates to a combination stop action for organs which is not only entirely effective for that purpose but has the further advantage that by far the greater part of the mechanism can be placed in the organ chamber as distinguished from the organ console whereby the latter can be kept small in size which is highly desirable especially in residence organs.

The further features and advantages of my combination stop action will be apparent to those skilled in the art from the following description in connection with the annexed drawings showing one preferred embodiment of my invention.

In said drawings, Fig. 1, is a necessarily more or less diagrammatic view of the elements and connecting circuits of said embodiment of my invention; Fig. 2, is the same but differs in showing some of the parts operated into new positions; Fig. 3, is a side elevation partly in vertical cross-section on a larger scale than Fig. 1 of the stickers shown in said figure with their jacks, the jack-bars for operating them, the electrical contact bars and the other related operating and supporting parts, stated differently, Fig. 3, is a view on the line 3—3 in Fig. 4, looking in the direction of the arrows; Fig. 4 is a front elevational view of part of a row of stickers and said related parts, in other words, is an elevational view looking at the device shown in Fig. 3 as it would appear when viewed from the left hand side of said Fig. 3; Fig. 5 is a perspective view of one of the jack actuator bars and Fig. 6 is a similar view of one of the jack actuators detached, the aforesaid Figs. 3 to 6 inclusive serving to show structural details not so well brought out, if at all, in the more diagrammatic views Figs. 1 and 2. The same reference characters refer to the same parts throughout the various figures.

Describing now my invention by means of the illustrated preferred embodiment, said invention comprises the combination and subcombinations of elements as follows:—

B throughout indicates one of the terminals or poles of a battery or other source of current.

1—1 are stop-tablets on the front ends of the stop-tablet bodies 2 tiltably supported on trunnions 3 in openings provided to receive them in the usual board or panel provided for the purpose conveniently within the organist's reach on the organ console. 4 is an axially extending electric contact from the rear end of each stop-tablet body. 5 and 6 are electric contacts secured to the rear of the panel which are bridged by the contact 4 when the given stop-tablet is tilted down, which is the "on" position of the tablets, to throw the respective organ stops into operation with which they are electrically connected. The stops are indicated S^1 S^2 S^3 and it will be seen in Figs. 1 and 2 that the lowermost stop-tablet is tilted to complete the circuit to the stop S^1. On the other hand, when the tablets 1 are tilted into their "up" or "off" position the contact 4 does not bridge or electrically connect the contacts 5 and 6 and therefore the related stops are not thrown into operation.

7 and 8 are pneumatics adapted when collapsed as in Fig. 2 to tilt the stop-tablets by acting against their axial contacts 4, the pneumatics 7 acting to tilt the stops into their "off" position and pneumatics 8 tilting them into their "on" position. Any well known electropneumatic means or for that matter any other suitable kind of means may be used for operating the pneumatics 7 and 8. Accordingly Figs. 1 and 2 merely show said means diagrammatically and incompletely, it sufficing to show that there is an electro-magnet 9 with the usual armature valve 9^a for controlling each pneumatic 7; and similarly an electro-magnet 10 and an armature valve 10^a for controlling each pneumatic 8.

Preferably on the front of the console under or adjacent to the keyboard are a stop cancellation piston 14, a set-piston 15 and a series of combination pistons 16.

Referring now to the cancellation piston 14, this operates a bell-crank 150, connected by a link 160 with an arm 17 projecting rigidly at right angles from a wooden bar 18. This bar is supported to swing on trunnions 19 at its upper corners towards and away from the back of the console panel 20. 21—21

are contacts on the said bar 18 to co-act with contacts 22—22 on the panel. When the cancellation piston is pushed in, all of the contacts 21 are brought against all of the contacts 22 and from the electrical connections in Fig. 1 it will be seen that electrical circuits are closed through all the magnets 9 which operate all of the pneumatics 7 to collapse them and to tilt all of the "on" stop-tablets into their "off" position. In short, every time the cancellation piston 14 is pushed in, it automatically clears all of the stop-tablets and therefore clears or cancels all of the stops which happen then to be active. A spring 14^a automatically restores the cancel piston to its outward position as soon as the piston is released. The set-piston 15 has a similar spring 15^a for the same purpose as have also each of the pistons 16 a spring 16^a.

The set-piston 15 operates a bell crank 23 connected by a link 24 with 3 arms 25, 26, 27 projecting rigidly at right angles from the wooden bars 28, 39, 30 respectively, all of said bars being pivotally supported by trunnions to swing towards and away from the console panel 20, the trunnions being at the upper corner of the bars 28 and 30, and at the lower corners of the middle bar 29.

Each of the bars 28, 29, 30 carries a series of contacts (analogous to the contacts 21 previously described on bar 18) adapted to engage stationary contacts on the console panel 20. There are two kinds of said stationary contacts:—first, a series of long vertical metal strips 31—31 for cooperation with the contacts on both of the bars 28 and 29; thus the contacts on bar 28 engage said contacts 31 when the set-piston is pushed in as it is in Fig. 1; and contacts on the other bar 29 engage said contacts 31 when the set piston is in its out position as shown in Fig. 2. Secondly, there is the series of vertically shorter stationary metallic contact strips 32 engaged by the contacts on the bar 30 when the set-piston 15 is "in" as shown in Fig. 1.

The combination pistons 16—16 (of which it will be noted there are a plurality whereas there is only one cancel piston and only one set-piston) have conducting inner ends 33 adapted when the pistons are forced in (against the resisting action of the coil spring 16^a) to bridge across and electrically connect the contacts 34—34. It will be seen from Figs. 1 and 2 that the lower combination piston 16 is wired to the left hand or first panel contact strip 31, whereas the upper combination piston is wired to the adjacent or second panel contact strip 31. The bar 28 contacts which cooperate with said contact strips 31 will be seen to be wired to operate magnets 35 in the chamber 36; and further it will be seen, when the set piston 15 is in and one or more of the combination pistons 16 are also in, that the corresponding magnet 35 or magnets are energized. The result of the energizing of a magnet 35 is to raise its armature valve 35^a thereby venting to atmosphere the related pneumatic 37 which (because the chamber 36 is filled with air having greater than atmospheric pressure) thereupon immediately collapses lifting the attached rod 38 and rocking the connected bell-crank 39 about its pivot 40 and rocking the supported bar 41 towards the left as in Figs. 1 and 2. These bars 41 will hereafter be called jack-actuator bars or jack actuators because each time one of them is swung to the left as just described by pushing in the set piston 15 and the corresponding combination piston 16, said jack actuator bar 41 engages and swings the adjacent jacks 42 about their pivots 43 by which they are pivotally supported on the sides of the respective upright rods 44 hereafter called stickers.

These rods or stickers 44 are supported so that each is independently capable of a short up and down movement. For example the first sticker 44 at the right in Fig. 1 is supposed to be slightly raised relatively to the other two stickers 44 which latter are in their normal down position. The jack actuator bars 41 are located relatively to the pivots 43 of the respective rows of jacks 42 on the sticker so that when said bars are rocked to the left they strike the upper parts of the jacks (viz., the part above the pivot) of any stickers that are down and so swing said jacks so that their upper parts lean to the left in Fig. 1; or they strike the lower part of the jacks of any stickers that are up and thereby swing said particular jacks so that their upper parts lean to the right, for example into the position shown by the lower jack on the right hand sticker in Fig. 1.

Depending upon whether the upper ends of the jacks 42 project to the right or the left as aforesaid, said upper ends will make electrical contact respectively with the short contacts 45 or the long contacts 46, said contacts 45 and 46 being insulated from each other and being supported in pairs as shown on wooden bars 47, there being a pair of said contacts 45 and 46 for each jack projecting beyond the side edge of said bars 47 so as to overlie the upper ends of the row of jacks 42 on the stickers, said bar being supported on trunnions 48 at its rear edge so that the said long and short contacts of said bar can be lowered into electrical contact with the upper ends of the jacks or vice versa raised clear of them.

It now becomes necessary to describe how the stickers 44 are selectively raised and lowered; also how the long and short contacts on the bars 47 (hereinafter called contact bars) are operated and what are the effects thereof.

Therefore reverting to the stickers 44, these are stiff metal strips (compare Figs. 3 and 4) projecting freely, each through a slot-shaped hole in the top rail 49 of a suitable rectangular supporting frame, whereas the lower ends of said stickers are provided with inte-

gral axially extending cylindrical projections or ends 44ª adapted to reciprocate freely up and down in a hole in a celluloid disc 50 countersunk and secured in the top of a box or chamber 51 (compare Fig. 1) containing air under pressure. These lower ends 44ª of the stickers project down into said chamber wherein they are attached to the movable boards of the pneumatics 52. Each sticker has its own pneumatic 52 for the purpose of raising and lowering it as will now appear, Figs. 1 and 2 for simplicity showing only one pneumatic 52 and the related parts for operating the first or right hand sticker shown in said figures. 53 is an electro-magnet one for each pneumatic 52, whose armature valve 53ª when lifted by the energized magnet vents the related pneumatic 52 to atmosphere, whereupon the higher air pressure in the chamber collapses said pneumatic and raises the connected sticker into its "up" position. Reversely said magnet when energized drops said valve and connects the interior of the related pneumatic with the air pressure in the chamber thereby expanding the pneumatic and lowering the connected sticker into its down position.

These magnets 53 are wired as will be seen from Figs. 1 and 2 to the respective contacts on the heretofore described bar 30 which when the set piston 15 is in, engages with the contacts 32 which in turn are wired to the contacts 5 of the respective stop-tablets, the other contacts 6 of the said tablets being connected as shown to one pole or terminal of the battery or other current source B. Where the stop tablets 1 are tilted in their "off" position it will be seen that the circuits from the the current source B through the related magnets 53 are not closed even though the set piston is in and the related pneumatics 52 will be expanded and their stickers 44 will be down. However the tilting of a stop tablet into its "on" position like the lowermost tablet in Fig. 1, will close the electric circuit through the connected magnet 53 (if the set piston be in as in Fig. 1) and will lift its armature valve 53ª venting its pneumatics 52 to the atmosphere and collapsing it as shown in Fig. 1 and thereby raising the connected sticker 44 (first on the right in Fig. 1) into its "up" position.

In short, there is a sticker 44 for each stop-tablet 1 and the connections are such that tilting one or more of said stop-tablets into their "on" position results in raising the related sticker or stickers provided the set-piston 15 is in, all the other stickers belonging to the off stop tablets being unaffected, and therefore remaining in their down positions.

It has already been described how the jacks 42 of the down stickers are swung with their upper ends to the left and the jacks of the up stickers with their upper ends to the right by the jack-actuator bars 41; and how said bars are in turn operated by the pneumatics 37 controlled by the magnets 35 from the contacts on the bar 28 closed by the set piston 15 when in its "in" position against the long strip contacts 31, said respective contacts 31 being in turn energized or not, depending upon which one, if any, of the combination pistons 16 is in.

In short, there is a horizontal row of jacks 42 for each jack actuator bar and for each combination piston. For simplicity only two combination pistons are shown and consequently only two horizontal rows of jacks and only two jack actuators. However in the actual organ depending on its size, there will be 15 or 20 or more combination pistons and the same number of horizontal rows of jacks on the stickers 44 and the same number of jack actuators 41 and of the long and short contact bars 47. Also for simplicity only 3 stop-tablets and stickers are shown but in the actual organ there will be many more,—ordinarily as many as there are stops in the organ.

It now only remains to describe the means for operating the long and short contact bars 47. Each of these is tiltable about its trunnions 48 by a pneumatic 55 in the chamber 36 operatively connected by a rod 56 with an arm 57 extending rigidly from the back of the given bar 47. As before, these pneumatics 55 have their respective magnets 58 and armature valves 58ª for controlling them, said magnets being wired as shown in Fig. 1 from one pole of the current source B to the respective contacts on the bar 29 which it will be remembered are brought against the long contact strips 31 by the actuation of the set piston 15 into its "out" position, but even then no electrical circuit is closed through any of the said magnets 58 unless one or more of the combination pistons 16 are pushed in whereupon the particular long contact strips 31 connected with said pushed in combination pistons deliver the current to the related contacts on the said bar 29 and these in turn to the related magnets 58 which thereupon operate the connected pneumatics 55 to lower the related contact bars 47 against the tops of the adjacent row of jacks.

It will be seen from Fig. 1 that the long contacts 46 are wired respectively to the magnets 9 which when energized bring about the collapse of the pneumatics 7 to tilt the stop-tablets up into their "off" position. Similarly it will be seen that the short contacts 45 are wired respectively to the magnets 10 which when energized bring about the collapse of the pneumatics 8 to tilt the stop-tablets down into their "on" position (like the lowest stop-tablet 1 in Fig. 1) wherein it will be remembered that the electrical circuits are completed to the related stops so that notes played on the organ keyboard will sound on said energized stops.

In short wherever a jack 42 has been tilted with its upper end to the right in Fig. 1, a short contact 45 will engage it and automatically tilt into "on" position the related stop-tablet so that the organist will have a visual signal of the stop that is "on" and at the same time said stop will sound for all notes then being played on the keyboard. On the other hand wherever a jack 42 has been tilted with its upper end to the left in Fig. 1, a long contact 46 will engage it and automatically tilt into "off" position the related stop-tablet if it happens to be on and will shut off the related stop from sounding; or if said stop-tablet happens to be already off, it will be left as it was.

The following is a summary of the mode of operation of my combination stop action as a whole, it being understood that the general purpose of any combination stop action is to permit the organist to set the stops he wishes to use in advance of the playing of the composition so that all he has to do during the playing is to push in one combination piston after the other of the series of combination pistons at the proper intervals during the rendition and thereby automatically bring on one set of stops after another as previously selected and set up by the organist by means of the various combination pistons in advance of the rendition.

To operate my combination stop action

1. Push in the set-piston 15 and keep it pushed in.

2. Set up the first set of desired stops by tilting the corresponding tablets 1 down into their "on" position and then momentarily push in the first of the series of combination pistons 16.

Explanation:—The down tilting of the stop tablets results in the lifting of the corresponding stickers 44 because the circuit from the source B is closed through the contacts 5 and 6 of the stop tablets through the related contacts 32 and those of the bar 30 and through the related magnets 53, resulting in the collapse of the related pneumatics 52 and the lifting of the related stickers 44. Of course all other stickers remain in their normal down position.

Pushing in the first combination piston results in rocking the related jack actuator 41 against the adjacent row of jacks 42 because the circuit from the source B is closed, through the contacts 34 of the particular combination piston and through the related contacts 31 and those of the bar 28, and through the related magnet 35 in the chamber 36 resulting in the collapse of the related pneumatics 37 and the rocking of the related jack actuator bar 41 as aforesaid.

The effect of rocking said jack actuator 41 is to tilt the jacks 42 with their upper ends to the right on all of the raised stickers; and to tilt all jacks on all down stickers to carry their upper ends to the left, if they are not already in that position.

In short, the stop-tablets tilted on by the organist for the first set of stops he desires to use are now represented in the mechanism by jacks 42 with their upper ends tilted to the right on stickers 44 belonging to said particular stop-tablets, said jacks being located in that horizontal row of jacks which belongs to the particular stop piston 16 that was employed.

3. Momentarily operate the cancel piston 14 which immediately returns all "on" stop tablets to their "off" position and lowers the stickers 44 belonging to them but without disturbing the adjustment of their jacks.

Explanation: The above follows because pushing in the cancel piston completes the circuit from the source B through all the contacts 22 and 21 through all the magnets 9 which collapse all of the pneumatics 7 of all of the stop-tablets and tilt them all into "off" position, wherein their contacts 5 and 6 are open circuited and consequently all of the sticker magnets 53 are de-energized and all of their pneumatics 52 are expanded and therefore all of the stickers 44 are lowered.

4. Then set up the next set of desired stops by tilting "on" the related tablets and push the next combination piston 16 in the series following this momentarily with pushing in the cancel piston to clear all "on" tablets. This is obviously a repetition of the three steps above, the only differenec being that due to the operation of a different combination piston, the new combination of stops is represented by jacks tilted to the right in a different horizontal row from that on which the first combination of stops was set up.

5. Repeat the above operation until the entire series of stop combinations has been set up on the different horizontal rows of jacks by using one combination piston after the other, of which as already stated there may be 15 or 20 or more depending on the size of the organ.

6. Release the set piston 15 which now automatically returns to its "out" position and closes the contacts on bar 29 against the contacts 31 but opens all the other contacts, as shown in Fig. 2.

7. Finally start in playing the keyboard, momentarily pushing in the combination pistons 16 one after the other at the proper time intervals when the particular combination of stops previously set up by the given combination piston is wanted. This mere act of momentarily pushing in a combination piston immediately activates all of the stops previously set up by said piston so that they sound for all notes then being played at the keyboard and continue to sound until the next combination piston is pushed in.

Explanation: With the set piston 15 out, the momentary pushing in of any combina-

tion piston 16 closes the circuit from the current source B through related contact 31 and the contact on the bar 29 and through the related magnet 58 in the chamber 36 resulting in momentarily collapsing the related pneumatic 55 and the momentary contacting of the long and short contacts 45 and 46 of the related bar 47 with the adjacent horizontal row of jacks 42 as indicated in Fig. 2,—the short contacts 45 closing circuits from the source B through the stickers 44 and the jacks 42 on said stickers that have their upper ends tilted to the right through the related magnets 10 which collapse the related pneumatics 8 and tilt the related stop tablets down into their "on" position and so activate the related stops representing the combination which the organist previously set up.

On the other hand the long contacts 46 wherever they touch jacks with their upper ends turned to the left as indicated in Fig. 2 close circuits from the source B through all related magnets 9 which collapse all related pneumatics 7 and thereby clear all stop tablets and all stops which may have been active in the previous combination but are not comprised in the present combination which the organist desires to sound for the notes being played at the keyboard.

It only remains to refer to the following details of construction shown in Figs. 3 to 6. Each of the jacks 42 preferably consists of a piece of sheet metal shaped as shown with bent over lugs 60 acting as stops for the two positions of the jack by respectively engaging when in said positions the edge of tne stickers 44. 61 is a light spring connecting the lower end of the jack with the sticker so that even a partial tilting of the jack one way or the other by the jack actuator bar is automatically and positively completed by the spring. Also the spring prevents the jacks from being unintentionally jarred or shaken out of their proper adjusted positions. The upper end of each jack is bent over as a support on which a short piece of non-corrosive electrical contact wire 62 is laid and soldered.

The jack actuator bar 41 and the construction of the related supporting and operating parts is shown in end view in Fig. 3 and in the fragmentary perspective view Fig. 6 which latter shows a portion of one end of said bar.

The contact bar 47 and the construction of the related supporting and operating parts is shown in end view in Fig. 3 and in the fragmentary perspective view Fig. 5, which latter shows a portion of one end of said bar. The rear ends of the contact wires are secured in spaced relation by being clamped between the top of the wood bar and a wooden or non-conducting strip 63 secured to the bar. Their forward ends extend between lugs 64 secured to the bar at its front edge, said lugs permitting up and down movement of the contacts but not lateral displacement relatively to one another.

Changes and modifications may be made in the foregoing partial embodiment of my invention which will nevertheless still be within the spirit of the foregoing description and within the meaning and spirit of the annexed claims and which, as such, are accordingly intended to be covered hereby.

What I claim is:

1. The combination stop action for organs comprising means conveniently called stop-tablets individual to the stops of the organ and severally movable into on and off positions for respectively sounding and silencing said stops; a plurality of members conveniently called stickers, severally adjustable into two positions conveniently called No. 1 and No. 2; a row of parts conveniently called jacks, one on each of said stickers, said jacks being severally adjustable into two positions conveniently called No. 1 and No. 2; a set of sticker-operating means, one for each of the aforesaid stickers, each means controlled by a stop-tablet for adjusting the related sticker from its No. 1 position into its No. 2 position and vice versa; means conveniently called a jack actuator bar, supported adjacent to the aforesaid row of jacks for movement to and from the same and operable from a control, conveniently called a combination piston, to adjust into their No. 1 position the jacks on any and all stickers that are in their No. 1 position; and to adjust into their No. 2 positon the jacks on any and all stickers that are in their No. 2 position; a row of contacts movable as an entirety and conveniently called a contact bar, supported adjacent to the aforesaid row of jacks, controlled by the aforesaid combination piston to be movable to and from said jacks, there being a contact for each jack which contacts therewith or not depending upon whether the jack is in its No. 1 or No. 2 position, said contacts being operatively connected with the respective stop tablets and organ stops.

2. The combination stop action for organs comprising means conveniently called stop-tablets individual to the stops of the organ and severally movable into on and off positions for respectively sounding and silencing said stops; a plurality of members conveniently called stickers, severally adjustable into two positons conveniently called No. 1 and No. 2; a row of parts conveniently called jacks, one on each of said stickers, said jacks being severally adjustable into two positions conveniently called No. 1 and No. 2; a set of sticker-operating means, one for each of the aforesaid stickers, each means controlled by a stop-tablet for adjusting the related sticker from its No. 1 position into its No. 2 position and vice versa; means conveniently called a jack actuator bar, supported adja-

cent to the aforesaid row of jacks for movement to and from the same and operable from a control, conveniently called a combination piston, to adjust into their No. 1 position the jacks on any and all stickers that are in their No. 1 position; and to adjust into their No. 2 position the jacks on any and all stickers that are in their No. 2 position; a row of contacts movable as an entirety and conveniently called a contact bar, supported adjacent to the aforesaid row of jacks, controlled by the aforesaid combination piston to be movable to and from said jacks; there being two contacts for each jack conveniently called contacts No. 1 and No. 2, one of which No. 1 engages the jack only in its No. 1 position and the other of which, No. 2, engages said jack only in its No. 2 position; and means between the respective contacts No. 1 and No. 2 and the respective stop-tablets and organ stops whereby one of them when it contacts with the jack puts "on" the related tablet and organ stop, whereas the other when it contacts with the jack puts "off" said tablet and stop.

3. The invention of claim 1, further characterized by switching means operated by a control conveniently called a set piston, for operably connecting the aforesaid combination piston at will either with the jack actuator bar or with the contact bar.

4. The combination stop action for organs comprising means conveniently called stop-tablets individual to the stops of the organ and severally movable into on and off positions for respectively sounding and silencing said stops; a plurality of members conveniently called stickers, severally adjustable into two positions conveniently called No. 1 and No. 2; a set of sticker operating means one for each of the aforesaid stickers, each means controlled by a stop-tablet for adjusting the related sticker from its No. 1 position into its No. 2 position and vice versa; and switch means operated by a control conveniently called a set-piston for connecting or disconnecting at will the aforesaid operative connections between the respective stop-tablets and the sticker operating means.

5. The combination of claim 1 further characterized by there being a plurality of the aforesaid rows of jacks; each row having its own jack actuator bar and its own contact bar including the respective operating means therefor and its own combination piston; also its own switch means operable by the set piston for shifting the control by the combination piston to operate at will either the jack actuator bar or the contact bar; said individual switch means being combined together so as to be operated by one and the same set-piston.

6. The combination stop action for organs comprising means conveniently called stop-tablets individual to the stops of the organ and severally movable into on and off positions for respectively sounding and silencing said stops; a plurality of members conveniently called stickers, severally adjustable into two positions conveniently called No. 1 and No. 2; a row of parts conveniently called jacks, one on each of said stickers, said jacks being severally adjustable into two positions conveniently called No. 1 and No. 2; a set of sticker-operating means, one for each of the aforesaid stickers, each means controlled by a stop-tablet for adjusting the related sticker from its No. 1 position into its No. 2 position and vice versa; means conveniently called a jack actuator bar, supported adjacent to the aforesaid row of jacks for movement to and from the same and operable from a control to adjust into their No. 1 position the jacks on any and all stickers that are in their No. 1 position; and to adjust into their No. 2 position the jacks on any and all stickers that are in their No. 2 position; a row of contacts movable as an entirety and conveniently called a contact bar, supported adjacent to the aforesaid row of jacks, controlled to be movable to and from said jacks, there being a contact for each jack which contacts therewith or not depending upon whether the jack is in its No. 1 or No. 2 position, said contacts being operatively connected with the respective organ stops.

7. The combination stop action for organs comprising means conveniently called stop-tablets individual to the stops of the organ and severally movable into on and off positions for respectively sounding and silencing said stops; a plurality of members conveniently called stickers, severally adjustable into two positions conveniently called No. 1 and No. 2; a row of parts conveniently called jacks, one on each of said stickers, said jacks being severally adjustable into two positions conveniently called No. 1 and No. 2; a set of sticker-operating means, one for each of the aforesaid stickers, each means controlled by a stop-tablet for adjusting the related sticker from its No. 1 position into its No. 2 position and vice-versa; means conveniently called a jack actuator bar, supported adjacent to the aforesaid row of jacks for movement to and from the same and operable from a control to adjust into their No. 1 position the jacks on any and all stickers that are in their No. 1 position; and to adjust into their No. 2 position the jacks on any and all stickers that are in their No. 2 position; a row of contacts movable as an entirety and conveniently called a contact bar, supported adjacent to the aforesaid row of jacks, controlled to be movable to and from said jacks, there being two contacts for each jack conveniently called contacts No. 1 and No. 2, one of which No. 1 engages the jack only in its No. 1 position

and the other of which, No. 2, engages said jack only in its No. 2 position; and means between the respective contacts No. 1 and No. 2 and the respective organ stops whereby one of them when it contacts with the jacks puts "on" the related organ stop, whereas the other when it contacts with the jack puts "off" said stop.

Signed at Cranford, in the county of Union and State of New Jersey, this 17th day of August A. D. 1926.

HARRY M. SMITH.