US00RE39489E

(19) **United States**

(12) **Reissued Patent**

Fonfeder

(10) **Patent Number: US RE39,489 E**

(45) **Date of Reissued Patent: Feb. 20, 2007**

(54) **RING BINDER INSERTION CARRIER**

(75) Inventor: **Danny Fonfeder**, Quebec (CA)

(73) Assignee: **Buffalo-Eastcantra, Inc.**, Quebec (CA)

(21) Appl. No.: **29/209,134**

(22) Filed: **Feb. 19, 2004**

Related U.S. Patent Documents

Reissue of:

(64) Patent No.: **Des. 451,134**
Issued: **Nov. 27, 2001**
Appl. No.: **29/129,332**
Filed: **Sep. 13, 2000**

(30) **Foreign Application Priority Data**

Mar. 20, 2000 (CA) 2000-0839

(51) **LOC (8) Cl.** **19-04**

(52) **U.S. Cl.** **D19/27**

(58) **Field of Classification Search** D19/26, D19/27, 32, 3, 33; 402/1, 4, 70, 79; 281/3.1, 281/38, 51; 206/214, 305, 5
See application file for complete search history.

(56) **References Cited**

U.S. PATENT DOCUMENTS

2,194,003 A * 3/1940 Brooks 402/4
5,409,319 A * 4/1995 Bedol 402/1
5,876,144 A * 3/1999 Bedol et al. 402/4
6,183,157 B1 * 2/2001 Brown et al. 402/79
6,200,056 B1 * 3/2001 Jordin et al. 402/4

* cited by examiner

Primary Examiner—Paula A. Greene

(74) *Attorney, Agent, or Firm*—Antonelli, Terry, Stout and Kraus, LLP

(57) **CLAIM**

I claim the ornamental design for a ring binder insertion carrier, as shown and described.

DESCRIPTION

FIG. **1** is a perspective view of the ring binder insertion carrier embodying the design;
FIG. **2** is a top plan view of the ring binder insertion carrier of FIG. **1**;
FIG. **3** is a right side elevational view of the ring binder insertion carrier of FIG. **1**;
FIG. **4** is a left side elevational view of the ring binder insertion carrier of FIG. **1**;
FIG. **5** is a bottom plan view of the ring binder insertion carrier of FIG. **1**;
FIG. **6** is a front elevational view of the ring binder insertion carrier of FIG. **1**;
FIG. **7** is a rear elevational view of the ring binder insertion carrier of FIG. **1**; and,
FIG. **8** is a perspective view of the ring binder insertion carrier of FIG. **1** shown in its environment mounted to the back portion of a geometry kit case.
The broken lines in FIG. **8** are for illustrative purposes only and form no part of the claimed design.

1 Claim, 3 Drawing Sheets

Matter enclosed in heavy brackets [ ] appears in the original patent, but forms no part of this reissue; matter printed in italics indicates the additions made by reissue.

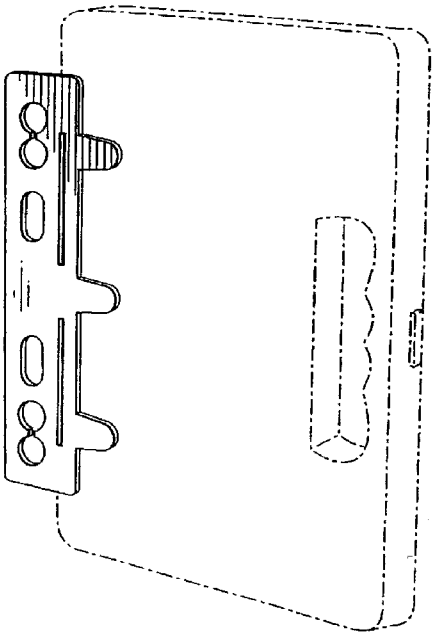

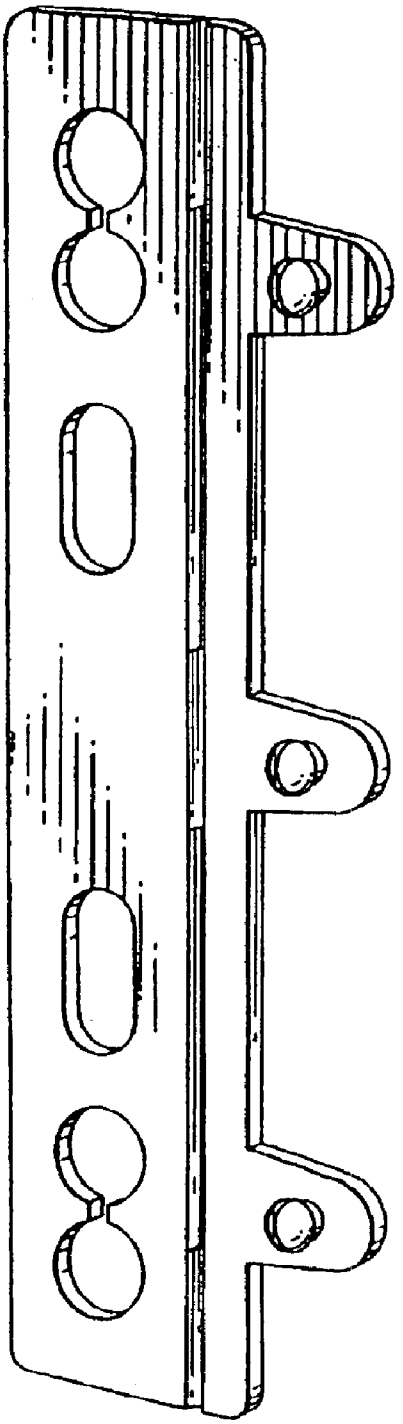

Fig. 1



Fig. 6



Fig. 3

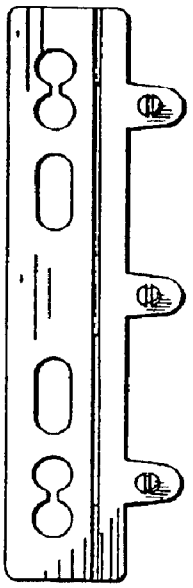

Fig. 2



Fig. 4

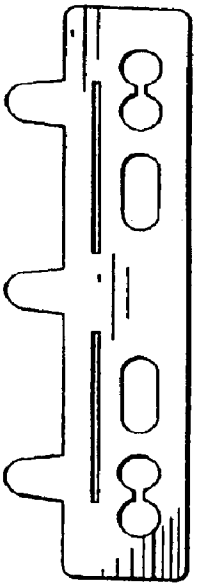

Fig. 5



Fig. 7

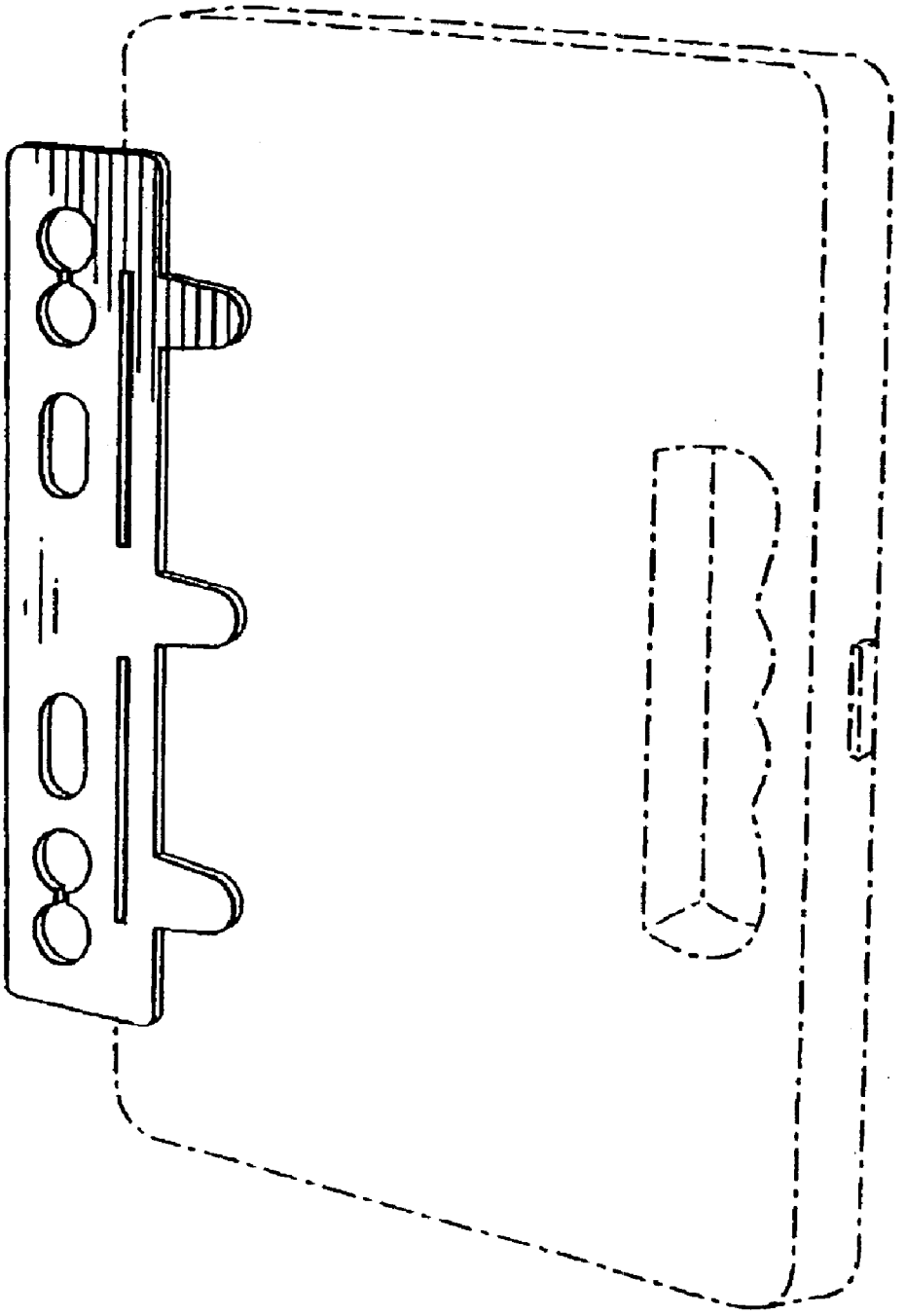

Fig. 8