April 13, 1937. G. S. P. DE BETHUNE 2,077,228

CONTINUOUS THERMODISINTEGRATOR

Filed Aug. 17, 1934 3 Sheets-Sheet 1

Fig. 1.

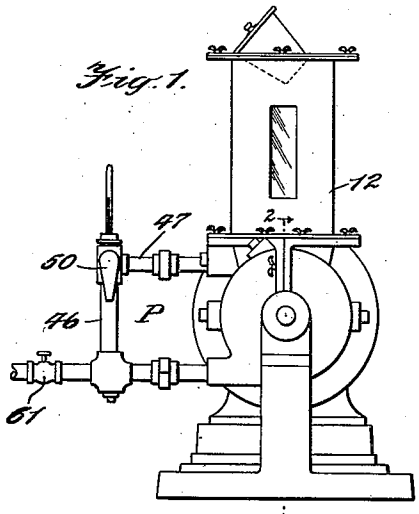

Fig. 4.

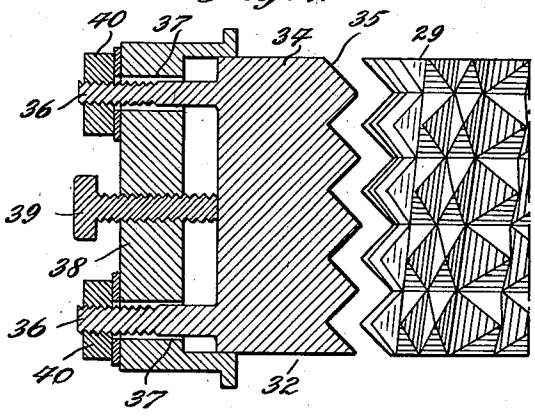

Fig. 2.

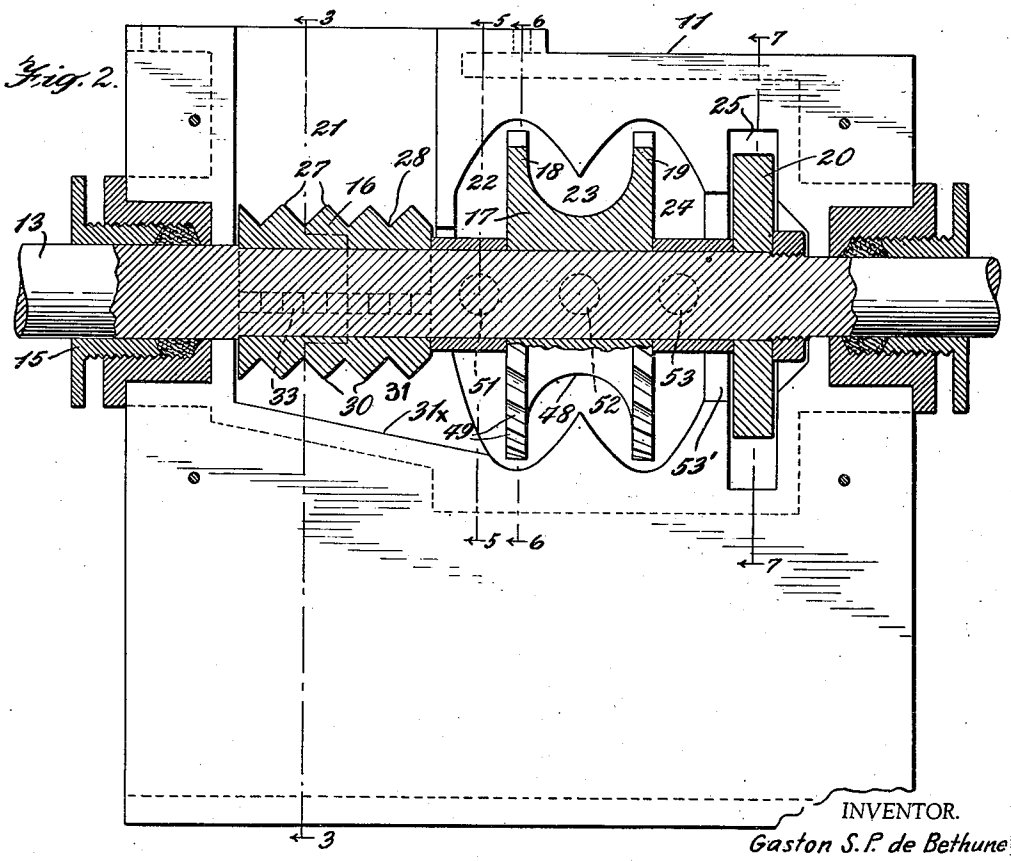

INVENTOR.
Gaston S.P. de Bethune

BY
Wales M. Chapin

ATTORNEY.

April 13, 1937. G. S. P. DE BETHUNE 2,077,228

CONTINUOUS THERMODISINTEGRATOR

Filed Aug. 17, 1934 3 Sheets-Sheet 2

Fig. 3.

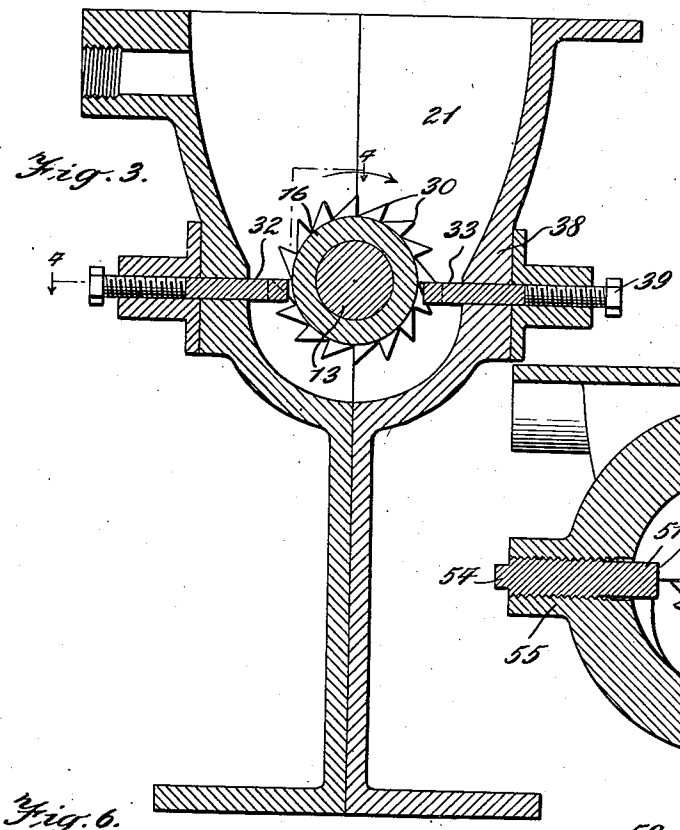

Fig. 5.

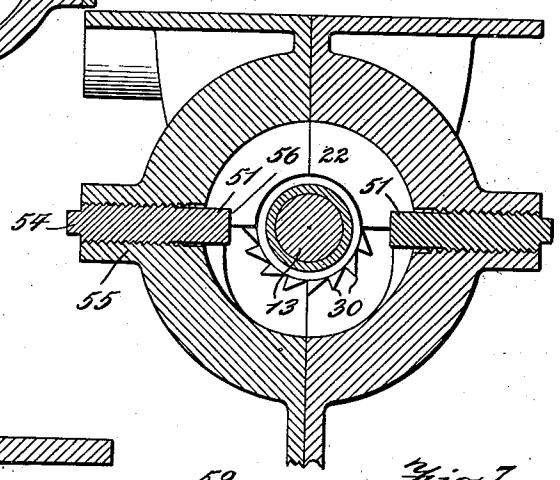

Fig. 6.

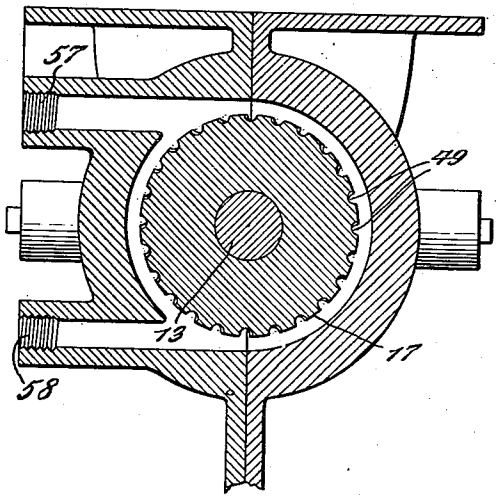

Fig. 7.

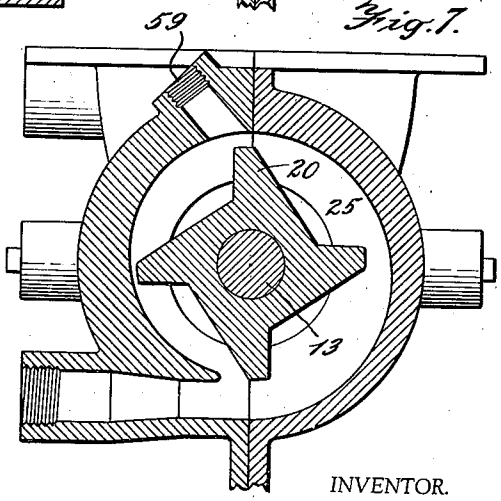

INVENTOR.
Gaston S. P. de Bethune

BY Waldo M. Chapin
ATTORNEY.

April 13, 1937. G. S. P. DE BETHUNE 2,077,228

CONTINUOUS THERMODISINTEGRATOR

Filed Aug. 17, 1934 3 Sheets-Sheet 3

Fig. 9.

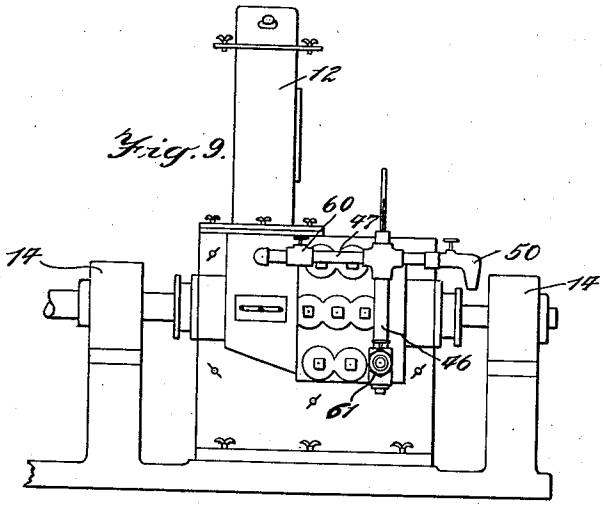

Fig. 8.

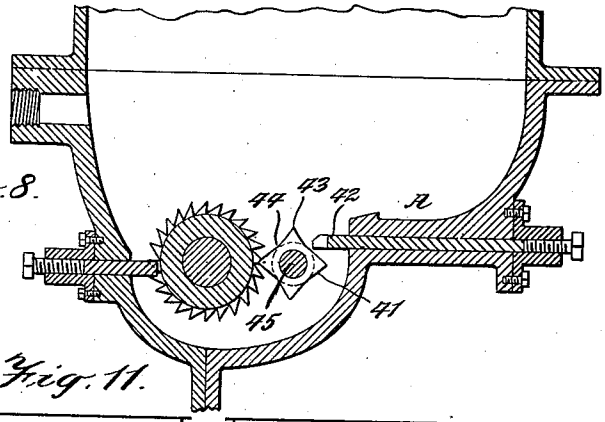

Fig. 10.

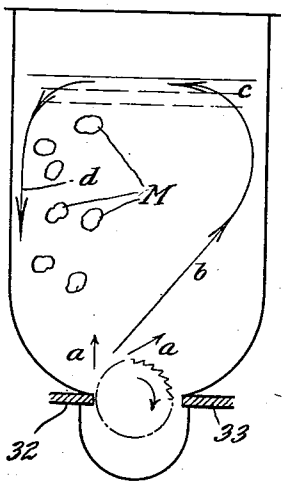

Fig. 11.

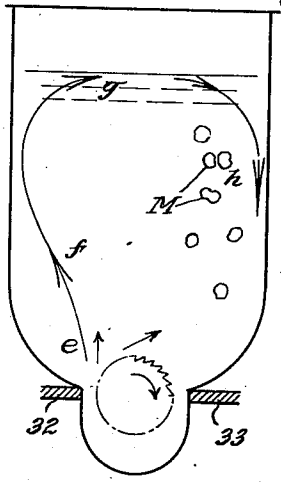

Fig. 12.

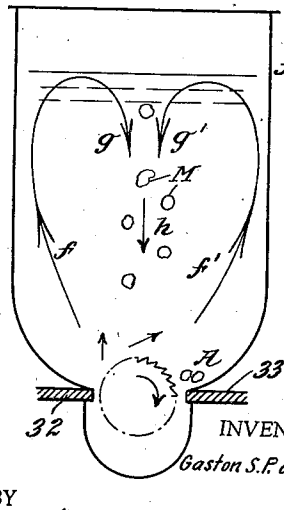

INVENTOR.
Gaston S.P. de Bethune

BY
Waldo M. Chapin
ATTORNEY.

Patented Apr. 13, 1937 2,077,228

UNITED STATES PATENT OFFICE

2,077,228

CONTINUOUS THERMODISINTEGRATOR

Gaston S. P. de Bethune, New York, N. Y.

Application August 17, 1934, Serial No. 740,253

15 Claims. (Cl. 259—95)

This invention relates to the treatment of raw materials, such as alimentary materials, in bulk, with the general object of effecting their thermodisintegration as such operation is defined in a previous application for patent filed by me July 24, 1934, Serial No. 736,653.

The present invention has for one of its objects to provide a machine of a unitary structure by which are continuously and concomitantly performed the steps of intra-magma disintegration and intra-magma heat transfer. More particularly, an object of the present invention is to provide a machine embodying in a unitary structure a disintegrating stage, including a disintegrating element, a mixing stage, including a mixer element, and an impeller element, all of progressively increasing efficiency, and all of said elements being mounted coaxially on a common shaft, and cooperating rotatively with the interior walls of a suitably shaped casing.

By this novel arrangement I am enabled to effect the several steps of the intra-magma disintegration without loss, either of time or of space, and to avoid, by improved means, any tendency toward separation of the juices and more liquid part of the magma from the pulp contained therein, which is an essential condition for insuring a good intra-magma heat transfer, and also to prevent any tendency to separation of the juices or more liquid part of the finished product.

A more particular object of the invention is to provide a novel and desirable method of securing at will various desirable changes in the currents set up in the magma during the operations of disintegration and/or thermodisintegration characteristic of my improved process.

A cognate object of the invention is to provide apparatus by which these changes of current flow may be accomplished by a simple adjustment of appropriate devices without interrupting the continuity of the operations.

Still another object is to provide means of a novel and more efficient character than those used conventionally for effecting disintegration of the pulpy content.

A further object is to provide a novel means to entrap automatically any alien, bulky substances which might otherwise injure the working parts or otherwise interfere with the efficient performance by the apparatus of its intended functions.

A concomitant object is to provide for carrying on the process in such a manner and by such means that masses of the material undergoing treatment which may be entrapped with the alien materials may be dislodged readily and returned to the disintegrating means for complete disintegration.

Among other objects of the invention are the provision for imparting to the magma in the intake and in the mixer paroxysms of turbulence between which there is a smooth, uniform flow of the magma throughout the system of devices comprised in the machine, including a novel arrangement of adjustable baffle members, a novel conformation of the disintegrator element, and a streamlined contour of certain parts of the mixer element; also a novel conformation of the mixer chamber, and the provision for moving the finished product in a steady flow, including a manifold by which the said product can be either discharged continuously, or selectively may be discharged continuously in part, and in part returned to the intake.

The above and other features of the invention are illustrated and described fully in the accompanying drawings and specification and are pointed out in the claims.

In the drawings:

Fig. 1 is a view in end elevation of a machine in the construction of which the invention has been embodied and which is especially designed for carrying my novel method into effect.

Fig. 2 is a central, longitudinal sectional view, taken on the line 2—2 of Fig. 1 and on a larger scale.

Fig. 3 is a vertical, sectional view on the line 3—3 of Fig. 2.

Fig. 4 is a fragmentary, detail view in horizontal section on the line 4—4 of Fig. 3.

Fig. 5 is a vertical, sectional view on the line 5—5 of Fig. 2.

Fig. 6 is a similar vertical sectional view on the line 6—6 of Fig. 2.

Fig. 7 is a similar vertical sectional view on the line 7—7 of Fig. 2.

Fig. 8 is a vertical sectional view similar to Fig. 3, illustrating a modification.

Fig. 9 is a side elevation of the machine.

Figs 10, 11 and 12 are similar typical, diagrammatic views respectively illustrating different positions of certain operating parts and of the differences in current flow induced thereby.

In a now-preferred embodiment of the invention selected for illustration and description, the machine shown comprises a casing 11, which may be divided vertically, as shown, or horizontally, or both, as found convenient, the casing supporting

a hopper 12, and within the casing is mounted a rotor comprising a shaft 13, shown as horizontal (although the entire machine may be organized on a vertical axis). The shaft is journalled in bearings 14 and is provided with stuffing boxes 15.

On the shaft are mounted, in succession a shearer or disintegrator element 16, a mixer element 17 comprising radial vanes 18 and 19; and an impeller element 20 of a centrifugal pump.

These parts rotate in properly profiled cavities 21, 22, 23, 24 and 25 of the casing.

The disintegrator element 16 operates near the bottom of the intake chamber or cavity 21 of the machine, on top of which is located the hopper 12 in order to increase the hydrostatic head of the magma under treatment (see Figs. 1 and 9).

The hopper is preferably jacketed, and in general jackets may be provided wherever desirable, although the jackets have not been shown, for the sake of simplicity in the drawings.

On top of the hopper may be mounted a special feeding device such as that described in my previous application above referred to.

On the discharge end of the pump, rises a manifold system of piping, designated generally by the reference character P, and in which the product discharged by the pump circulates, due to the kinetic energy imparted to it by the impeller.

All or a part of the said product is finally discharged, as through an outlet valve 50 or 61, in a condition suitable for consumption or for further treatment, as for preservation; and another portion of the product may be returned to the cavity 21 by means of pipes 46, 47 forming part of the system P and provided with suitable valves 50 and 60. A thermometer of any suitable type assembled on P, as shown in Figs. 1 and 9, permits an easy and continuous check upon the temperature.

The disintegrator 16 is of preferably cylindrical shape, with a periphery formed with parallel annular ridges 27 and intermediate grooves 28, and the ridges are divided by longitudinal grooves 29 (see Fig. 4) thus forming a multiplicity of pyramidal teeth 30. The groves 29 may desirably be of helicoidal formation to promote feeding of the magma toward the mixer. The bottom of the disintegrator cavity 31 may be inclined, as shown, for the same purpose.

Baffles 32 and 33 are provided to cooperate with the disintegrator. These baffles are, or may be, of similar structure, comprising respectively an elongated body 34 with a serrated margin 35 corresponding in contour, and cooperating with, the serrated periphery of the disintegrator, toward and from which the baffles are individually and independently adjustable by means of supporting arms 36 mounted slidingly in bearings 37 traversing the walls 38 of the casing, the baffles being preferably situated at diametrically opposite regions of the disintegrator.

A set-screw 39 is provided for each baffle, and nuts 40 are desirably used as means to limit the inward thrust of the baffles.

The baffles may be used to produce the following effects, viz.

The baffle 33, on the side of the disintegrator where the tangential force is directed downwardly, (see the arrow, Fig. 3) has for one effect to prevent accidental passage of large lumps from the cavity 21 into the passage underneath the disintegrator, and it also serves to regulate the rate of flow from the disintegrator to the mixing chamber.

The baffle 32, on the other side of the disintegrator, serves also to regulate the rate of flow of magma, in cooperation with the baffle 33, by controlling the flow of magma returning back to the cavity 21 from the under passage or cavity 31 and creates a condition of pressure below the disintegrator element which is favorable to the steady feeding of magma to the mixer.

It thus cooperates with the feeding moment derived from the spirally arranged disintegrator teeth and with the gravitational moment along the inclined surface 31x.

As both baffles are adjustable, this condition can be regulated at will.

Another object of the baffle 32 is, by controlling the return flow back to the intake, to control its velocity, and so to control the energy available for creating currents within the cavity 21.

When the clearance between the baffle 32 and the disintegrator, (see Fig. 10) is rather small, there can be produced in the cavity 21 intense and turbulent currents, as indicated by the arrows *a*, *b*, *c*, *d*. The raw materials, such as M, in the magma under treatment, are driven by the return currents *c* and *d* and they overcome the longitudinal currents *a* and cause flow of the magma into contact with the disintegrator, whereby pulpy content of the magma is rapidly removed abrasively in a continuous operation, the amount removed at any given instant constituting a slight part of its volume. As the magma materials have the same density as, or a density very near, the average density of the liquid magma, this contact with the disintegrator is smooth, being lubricated by the magma, and as soon as the abrasion is effected the solid, undisintegrated parts of the materials are taken away by the current *b*, and so on. I have created and observed the currents shown in Fig. 10 by adjusting the baffle 33 at a clearance of ⅛ inch and the baffle 32 at a clearance of $\frac{1}{32}$ inch.

When the said clearance betwen the baffle 32 and the disintegrator is large, (Fig. 11) there is formed in the intake another, slower, current along the arrows *e*, *f*, *g*, *h*, and the raw materials come down along *h* toward their contact with the disintegrator. In between, there is a position for the baffles in which, (see Fig. 12), there are produced two vertical ascending currents along the sides of the cavity 21, in the direction of the arrows *f*, *f'*, *g*, *g'*; and a vertical descending current *h* which brings the materials into contact with the disintegrator. I have created and observed the currents shown in Fig. 11 by adjusting both the baffles 33 and 32 at a clearance of ⅛ inch.

Of course, the density of the magma has its influence on this regime of currents. When the density of the magma is rather large, say about 1.3, there is a tendency always to create the currents of Fig. 12; this effect is the more marked when the magma is more viscous; and in this case there is a tendency for undisintegrated parts to accumulate in the pocket A.

The observations of this phenomenon led me to two important improvements, viz., I have provided, in the first place, for separating from the magma any alien material such as a stone or a piece of iron, or a knife, etc., which by chance could have fallen into the intake. Such a part, being of much higher density than the magma, sinks more rapidly toward the disintegrator, and while its contact may be a little harsh, still it is lubricated by the magma; and as soon as the contact is over, said alien parts are deflected to-

ward the pocket A, where they remain, the energy of the ascending current *f'* being insufficient to move them.

In the second place, I have made provision of means to dislodge the parts of raw materials that would have a tendency to accumulate toward A, and for this purpose I may provide, as a modification, in this part of the cavity **21**, a device, such as that shown in Fig. 8, comprising a rotating baffle **41** and a stationary adjustable baffle **42**.

The rotating baffle **41** is shaped with annular ridges **43** in alinement with the grooves between the teeth of the disintegrator **16**. It can be rotated either by hand control, or automatically at any convenient speed, and in either direction, as may be convenient in each particular case. This rotary baffle prevents accumulation of raw materials on the teeth of the disintegrator.

The rotary baffle is shown as having pyramidal teeth **43**, bounded by annular grooves, similar to grooves **28** of the disintegrator **16** and arranged so as to mesh therewith with a predetermined appropriate clearance, and by longitudinal grooves. These longitudinal grooves may be given any desirable shape depending upon the nature of the material to be dislodged, but the provision of such grooves is not an essential feature of the rotating baffle. The contour of the rotating baffle may be determined in advance, according to the nature of the material to be disintegrated.

The baffle system is completed by the stationary, adjustable baffle **42**, meshing with **41** in the same manner the baffle **33** meshes with the disintegrator **16**, and so as to prevent the passage of large parts from the cavity **21** to the passage toward the mixing chamber.

The rotating baffle **41** is carried by a shaft **45** entering the casing through stuffing boxes (not shown) and is supported by bearings (not shown). When it can be rotated slowly, at say 200 R. P. M. it may be supported on an inside bearing (not shown) provided in the casing.

By regulating the currents in the intake and the hopper, it can then be arranged that any raw materials entrapped in pocket A can be washed out of the pocket, whereas alien materials, being usually heavier, will remain in this pocket. Under said currents the magma is maintained in a state of intense turbulence in the intake.

It should be noticed that, whereas the free air-magma boundary surface (or the free boundary surface of the magma with a gas or a vapor if an appropriate feeding device is used) is always maintained at a certain gravity level in the intake cavity **21**, or in the hopper **12** surmounting said cavity **21** (see Figs. 10—11—12), the disintegrating action of the disintegrator **16** is always performed intra-magma and so out of contact with air or any other gas or vapor, which is an essential feature of the intra-magma disintegration.

The object of the mixing chambers **22, 23** and **24** is to complete and perfect the distintegration by insuring a perfect homogeneity of the product before its discharge through the pump. When this homogeneity is achieved, the final product is obtained and, if proper care is taken in further moving said homogenized product, any tendency to separation of the juices from the pulp is effectively overcome and the magma in the intake cavity **21** is maintained in the best fluidity by means of the by-passed flow through pipes **46, 47** of the system P. The mixing chamber may be of any desirable character, but is preferably of my own system as covered by Patent No. 1,727,753, and by application Serial No. 645,363. In shaping the vanes **18** and **19**, where there is more than one, I have found a decided advantage in streamlining the interspace between the vanes as shown at **48**. There is also a decided advantage in shaping the notches **49** of the vanes at a certain angle in order to foster the circulation toward the inlet of the pump. I have found further an advantage in providing adjustable baffles **51, 52, 53** in the mixing chamber by which to control the amount of friction imparted to the magma at this mixing stage.

By the very nature of my mixer and its herein disclosed improvements the magma in its progress through the mixer, which is always kept full, is submitted repeatedly to actions accompanied by turbulence of alternating and controllable intensities, said actions culminating in the homogenization of the product.

I have shown three sets of these baffles, at each side of the mixer chambers **22, 23**, the pair **51** at the intake of the chamber; the pair **52** at the middle; and the pair **53** at the outlet **53'** from mixer chamber **24** to pump chamber **25**. Their number, shape and position may however be varied.

They are supported by shanks **54** which slide in bearings **55** traversing the walls of the chamber, and may be secured in adjusted position by having threaded engagement as indicated. Their forward ends **56** are shown as cylindrical in shape but the exact contour may be varied as found suitable for particular uses.

There is provided in each bay of the mixing chambers two tangential openings **57, 58**. The openings **57** may be used for injecting into the liquid under treatment any additional material that may be desirable, the same openings may also be used as air drains. The openings **58** may be used either as drains or for setting up by-passes toward the intake if desirable at this stage, as shown in my previous application, Serial No. 645,363 and they may also be used for injecting under an appropriate condition of pressure, into the materials under treatment, any desirable additional material.

There is also provided in the cavity of the pump an opening **59** which is intended to be used as an air drain.

Any of these several openings, when not in use, is plugged or tapped.

The pump cavity is shown as a simple spiral volute and the impeller **20** is shown as of the open type; it is obvious that any kind of centrifugal or rotary pump may be used if convenient in regard to the nature of the products under treatment.

A pump is provided at the stage where the disintegration culminating in the homogenization of the product has been perfected and the mixer has to deliver the final product for discharge. There are two reasons therefor:—the first reason is to impart to said product an additional amount of positive pressure driving it toward the manifold system P; the second reason is to impart said additional pressure in such a manner that the product is advanced in a steady flow. A centrifugal pump such as the one shown in **25** with an impeller **20** is convenient to this end.

I have had under observation cases in which a newly homogenized product broke down and separated more or less rapidly in layers, if it was submitted to a regime of too intense turbulence, as for example by prolonging too much the action

of the mixer; when this fact occurred, it was exceedingly difficult to rehomogenize the product by further mixing, unless previously to being so retreated, it had been admixed with not yet homogenized materials.

The following examples of operation of the herein described machine may serve to illustrate the above description and emphasize desirably some of its details.

Example I—Production of orange marmalade

The machine is first primed so as to create a certain gravity level of magma in the intake and bring said magma to an adequate temperature of say 190 degrees F. Then whole, unpeeled oranges and granulated sugar at say 70 degrees F. are continuously fed into the magma in the proportion of, say, 45% oranges to 55% sugar. The manifold valve **61** being closed, valves **50** and **60** are regulated so as to return to the intake about one-half of the product advanced by the pump, while the other half of said product is discharged through **50**, for further utilization, at a rate of flow equal to the average increments of raw materials.

When dropping into the hot magma, the oranges are wetted by it, thereby liberating the adhering bubbles of air. Similarly the sugar starts to dissolve and the air entrained with the sugar also escapes. Intra-magma heat exchange starts immediately along the outer boundaries of the oranges and of the sugar crystals. An intensive mixing of sugar in the magma, accompanied by its dissolution, takes place under the action of turbulent currents such as *f* and *f'* in Fig. 12. The oranges, as well as the still undisintegrated parts of previously admitted oranges, are continuously driven toward the disintegrator **16**, and smaller parts (which may, however, happen to be up to ⅛ inch in size) are progressively abraded from said larger parts, intra-magma, out of contact with air or any other gas or vapor, thus creating new boundary surfaces along which immediately starts the intra-magma heat exchange, while the liberated juice is admixed with the magma. A part of said magma, in the form of a still very heterogeneous product, is continuously pushed by the disintegrator **16** into the cavity **31**, and a portion of this part is pushed, under a positive pressure, into the mixer, which is maintained full of materials in progress, while the other portion of said part is returned from the cavity **31** to the cavity **21**.

The mixer in the present description is of my own improved system (see my Patent 1,727,753, and application Serial No. 645,363) and acts consequently as a further disintegrator of increased efficiency, the materials being submitted to repeated actions accompanied by turbulence of alternate and controlled intensities, and under a regime of increased pressure. The solid fragments are consequently reduced progressively to a very small suitable size. At each reduction in size the particles are admixed with the more fluid elements and the heat transfer is thereby fostered. The final result is a homogeneous, hot fluid product which is ready to be discharged.

Said product, as the treatment progresses, becomes also more viscous, due probably to the liberation of the pectinous elements of the fruit, and it is efficiently advanced in a steady flow in the manifold system P by the action of the impeller **20**, imparting to it an adequate amount of centrifugal moment and pressure with little turbulence.

The portion of the final product which is returned to the intake through **47**, as it comes into contact with freshly liberated juices and with some of the added sugar, dissolving this latter and warming it up, acquires an enhanced fluidity, thus insuring a good fluidity in the magma.

Heat is supplied to the magma under treatment by friction of the rotating elements, and such heat may be supplemented, if necessary, by heat supplied to the magma, or to the returned product, or to both, by circulating hot water or steam in jackets conveniently provided on the several parts of the apparatus, as hereinbefore mentioned, in order to raise continuously the temperature of the increments of raw materials from their initial temperature of 70° F. to the desired temperature of 190° F., the total amount of materials in progress of treatment being at each instant at that average temperature, undisintegrated parts being under 190° F., while the fluid parts are above or at 190° F.

The discharged product when put in jars and cooled down, gels rapidly, and with proper care keeps indefinitely. It is a very tasty and smooth paste having an unusual degree of the distinctive flavor of fresh oranges. If it be desired to produce the conventional form of marmalade with shredded orange peels, the thermodisintegrated product is used, with an adequate proportion of sugar, as a stock base, in which to immerse an adequate proportion of shredded peels.

Example II—Production of tomato puree

After the machine has been primed up to the adequate gravity level and the temperature of say 170 degrees F., fresh whole tomatoes are continuously fed into the built-up magna, in measured increments, and correspondingly equal quantities of product are continuously withdrawn at a fixed rate of flow through the discharge valve **61** of the manifold P. Because of the readiness with which the thermodisintegration of this material can be effected it suffices to return to the intake cavity **21** a portion of magma from the cavity **31**, and there is no need for returning a part of the finished product to the intake, so that the valves **50** and **60** are kept closed. The baffles facing the disintegrator are regulated as shown in Fig. 11. The newly admitted tomatoes, at say 70 degrees F., as they drop into the magma, are wetted by it and the entrained air escapes, and intra-magma heat exchange starts. These tomatoes, as well as the still undisintegrated parts of previously admitted tomatoes, are driven toward the disintegrator **16** by the current *h* (Fig. 11) and as soon as they come into contact with it, intra-magma, out of contact with air or any other gas or vapor, parts are abraded and a great quantity of juice is liberated, which fosters the fluidity of the magma and the intra-magma heat transfer. The seeds are, as a rule, liberated from the pulp and some of them may even be crushed. The skins are shredded to small fragments. A part of the magma is continually pushed by the disintegrator **16** into the cavity **31**, and a portion of this part is returned to the cavity **21** where it produces a current as shown at *e* (Fig. 11), while the other portion of said part is pushed under a positive pressure into the mixer, which latter being of my own system (see Patent No. 1,727,753 application Serial No. 645,365) acts as a further disintegrator for the larger fragments, such as parts of the skin and the seeds, and reduces them to a very small size, insuring thereby a very effective heat transfer;—and finally

producing a homogeneous, heavy puree containing all the nutritious and flavoring elements of the tomatoes, and out of which the juice no longer tends to separate, because it is discharged from the pump 25 through 61 in a steady flow. As in the case of Example I, heat is supplied by suitable jackets at an adequate rate in order to maintain throughout the materials in progress of treatment the average temperature of 170 degrees F.

Example III—Production of banana puree

The machine is first primed so as to create a certain gravity level of magma in the intake and bring said magma to a suitable temperature of say 32 degrees F. Then fresh, peeled bananas and granulated sugar at, say, 70 degrees F. are continuously fed into the magma in the proportion of 80% bananas and 20% sugar. The manifold valve 61 being closed, the valves 50 and 60 are regualted so as to return to the intake about one third of the product advanced by the pump, while the other two thirds of the product are discharged at a rate of flow equal to the average increments of raw materials. The baffles facing the disintegrator 16 are regulated as shown in Fig. 10. Heat is continuously removed from the materials in progress of treatment by circulating brine or any suitable cooling medium through adequate jackets on the equipment.

The other details of the operation are substantially the same as in Example I.

The product is a fine and tasty puree, showing very little or no discoloration. It can be used, for example, for flavoring ice cream.

Food products, as a rule, when disintegrated and not properly homogenized, being under-treated or over-treated, exhibit a tendency to liberate juice and to form compact residual masses of pulpy or fibrous materials, which fact is very detrimental to their circulation through any kind of equipment.

They are highly sensitive to even slight changes in temperature, and, at certain temperatures, sometimes within the range of temperatures at which they should be treated to insure their further utilization, they exhibit a tendency to form heavy pastes which may become highly resistant to flow.

Moreover, when not maintained under a certain positive pressure, or when submitted to a certain degree of vacuum, their more volatile elements separate, and, as said elements are very difficult to recondense afterwards into a fluid mass from which they originate, they are likely to be lost, thus injuring the flavor of the product.

Due to these circumstances, it is very important to reduce as much as possible in time and in space the contact of the materials with the walls of any piece of equipment in order to avoid any possible disturbance caused by slight accidental variations in the treatment, and to check the temperature by appropriate means such as the thermometer shown assembled on the manifold. For this reason, in carrying out my novel process, I have departed from the conventional practice, carrying out the concomitant steps of intra-magma disintegration, and of intra-magma heat transfer, by using an apparatus of a unitary structure of the novel type herein disclosed, thus avoiding any multiplicity of separate machines with their necessary inter-connections.

From the foregoing, it will be clear that my novel apparatus has the following characteristic properties: it maintains the materials under treatment in stages of turbulence appropriate to their degree of disintegration at every step, in order to maintain them always in a condition of optimum fluidity for circulating or moving them with no separation of their fluid constituents; also, between said paroxysms of turbulence the materials are moved, in accordance with my method, in smooth, uniform flow; it performs rapidly and progressively their mechanical disintegration, culminating in their homogenization under states of pressure appropriate to their degree of disintegration at every stage, reducing greatly the risk of losing volatile elements; and it permits and causes an effective intra-magma heat exchange, which is perfected during the period of homogenization, at which stage, due to the fineness of the particles, there is no point at which the desired temperature is not reached, this heat exchange being effected not only in a very short time, but also with great accuracy and under easy control by thermometers located at crucial points of the apparatus.

It will also be clear from the foregoing disclosures that I have provided in a novel, compact, unitary structure, instrumentalities organized and cooperating in combination to effect continuously and progressively, intra-magma, out of contact with air or any other gas or vapor, the operations, accompanied by desirable heat exchanges, of first disintegrating pulpy or fibrous substances thoroughly and effecting an admixture of the divided pulpy or fibrous product with suitable fluid and/or other materials, and advancing smoothly the same in the form of an improved product to a mixing element which progressively carries the disintegration to a desirable culmination, homogenizing the product in the form of a smooth, fine puree, and delivers this latter in turn smoothly and continuously to the impeller element, by which it is delivered in a steady flow for useful employment or storage.

This series of operations is carried on continuously without loss of time or space by submitting the raw materials, intra-magma, out of contact with air or any other gas or vapor, to distintegrating and mixing actions of progressively increasing efficiency, accompanied by heat exchanges also of progressively increasing efficiency, under progressively increasing pressures, and with a regime of turbulence of alternating and appropriate intensities, until the desired effect is obtained, after which the turbulence is effectively and permanently reduced to a minimum compatible with a steady outflow of the finished product at a rate balancing the average increments of raw materials.

I do not know of any apparatus or machine of a unitary structure effecting the same results, and, while I prefer to use the disintegrator, the mixer and the pump in substantially the shape herein shown and described, it will be apparent that variations therein may be made within the spirit and scope of my invention.

I claim:—

1. In a wet thermo-disintegrating apparatus, the combination, in a unitary structure, of a rotary disintegrator, a rotary mixer, and a rotary impeller, all mounted coaxially in succession on a single shaft and individually each within a chamber of a continuous series of communicating chambers, said disintegrator stage being characterized by an intake chamber in

which said disintegrator is arranged to rotate in a fluid magma of the material undergoing disintegration, said other rotary elements being coordinated with said disintegrator stage by their relative proportions and disposition within their respective chambers, and by the provision of flow-controlling means within, and intermediate, said chambers, to maintain said magma with substantially constant characteristics of volume, fluidity, temperature and pressure, while permitting withdrawals from, and proportionate additions to, said magma.

2. An apparatus characterized by the elements combined and cooperating as set forth in claim 1, and further characterized by having a baffle member mounted in substantial proximity to the disintegrator and adapted to control the size of particles fed from the disintegrator stage to the mixer stage.

3. An apparatus characterized by the elements combined and cooperating as set forth in claim 1, and further characterized by having a baffle member mounted in substantial proximity to the disintegrator and adapted to control the return to the disintegrator stage of disintegrated product removed therefrom by the disintegrator element, and to cause the building up and feeding of a steady stream of magma containing particles selected for transmission to the mixer stage of said apparatus.

4. An apparatus of the class described comprising the elements combined and cooperating as set forth in claim 1 whereby a pressure head is set up in the impeller chamber, said apparatus being further characterized by having a by-pass connection between said impeller chamber and an earlier chamber in said series, and controlling means to permit selective direction under said pressure head of the material to said earlier chamber for priming and other purposes.

5. An apparatus of the class described, comprising the elements combined and cooperating as set forth in claim 1, whereby a pressure head is set up in the impeller chamber, said apparatus being further characterized by having a manifold connection between said impeller chamber and an earlier chamber in said series, and controlling means for said manifold to permit selective direction under said pressure head of the material to said earlier chamber for priming and other purposes, and to the discharge.

6. In an apparatus of the class described, the combination, in an apparatus of unitary structure, of a rotary disintegrator, a rotary homogenizer, and a rotary impeller, all mounted in the order named on a single shaft and individually each operating within a chamber of a continuous series of communicating chambers, and a manifold leading respectively and selectively to the intake and to the discharge of the apparatus.

7. The combination in a unitary structure of stationary and of rotary parts, the stationary parts comprising a casing with an intake, a disintegrating chamber, a mixing chamber, an impeller chamber and a manifold on the discharge end of this latter chamber, the rotary parts comprising a disintegrating member, a mixing member and an impeller, each rotating in the corresponding chamber, said manifold leading respectively and selectively to the intake and to the discharge of the apparatus.

8. A thermodisintegrating system characterized by a compact unitary structure comprising a casing having an intake cavity, a mixing cavity, a pump cavity with a pump discharge, and passages connecting said cavities; a manifold leading to the intake cavity and to a discharge of the system, a rotor mounted rotatably therein comprising a disintegrating member, a mixing member and an impeller, all assembled coaxially on the same shaft, and means to transfer heat to or from the system.

9. In a wet disintegrator, in combination, a casing and a rotary disintegrating member, the casing being characterized by having two enclosures in juxtaposition, one being an intake enclosure shaped as a hopper extending upright and having large inside dimensions in relation to the dimensions of said member, and the other being a discharge enclosure having an inner surface shaped in such manner that the cross-sectional areas between casing and member have crescent-like contours, the disintegrating member being positioned intermediate said enclosures in such manner that substantial portions of said member are located for operation in each of the two enclosures, a boundary between the two enclosures and common to both, said boundary limiting with said disintegrating member a restricted intercommunicating passage, said boundary being contoured in conformity to the shape of the surface of the disintegrating member including both ends thereof and substantially located in a plane approximately parallel to the axis of rotation, the corresponding walls of the casing at the boundary clearing said member with moderately close clearances, thereby causing the disintegrating member to disintegrate the materials in the intake while keeping them in turbulent motion, and simultaneously to create a pressure head in the materials moving into the discharge enclosure.

10. In a wet disintegrator, a stationary casing and a rotary disintegrating member, said casing having an intake enclosure shaped as a hopper extending upwardly, having large inside dimensions in relation to the size of said member, and provided with an intake opening of large area proportioned to the size of the enclosure, and a discharge enclosure having an inner surface shaped in such manner that the cross-sectional areas between said inner surface and said disintegrating member increase from one lateral end towards the other lateral end of said member, said casing being provided with a discharge opening of small area in regard to the area of the intake opening, the direction of flow through said discharge opening being substantially parallel to the axis of rotation of said member, said enclosures being in juxtaposition and having a common inner boundary line of a certain closed contour limiting an intercommunicating passage between the two said enclosures, and said disintegrating member being positioned entirely within said enclosures, opposite said boundary, in such manner that substantial portions of said member extend radially into each of said enclosures, said member clearing said casing with moderately close clearances at every point of said boundary line and with generally larger clearances at every other point of the inner surface of said discharge enclosure, said intercommunicating passage being restricted to a reduced area by the spatial relationship between said boundary and the surface of said disintegrating member.

11. In a distintegrating machine, and in combination, a rotatable cylindrical disintegrator element having a series of substantially parallel annular peripherial ridges divided by longitudinal grooves into a multiplicity of pyramidal

teeth, and a rotatable baffle element comprising a body member with a serrated face in juxtaposition with, and conforming to, said serrated cylinder, and an auxiliary baffle element comprising a baffle member adjustable to and from said rotatable baffle at a region thereof spaced from the region of said disintegrator cylinder.

12. In a machine of the class described, a mixer chamber having a plurality of adjacent bays each of approximately lenticular shape with central inter-communication openings defined by annular walls of V-shape in cross-section at the annular region of juncture between said bays, and a mixing device comprising a rotor having radial vanes spaced apart coaxially and connected by a streamlined concave surface, and further characterized by having the peripheries of said vanes in close juxtaposition with the inner peripheral walls of said lenticular bays at their greatest diameter and by having said annular concavity of said rotor in alinement with the annular joint between adjacent walls of said lenticular bays.

13. A mixer device comprising a chamber having a plurality of mixing bays in communicating relation, a rotor having a plurality of vanes, one in each bay and connected by a streamlined annular concavity, and a series of adjustable baffles, each baffle being of substantially cylindrical form and extending from the wall of a bay toward the axis of said rotor past the vanes and grouped in series, respectively in alinement with said annular, streamlined concavity and at the sides of said flanges remote from said concavity.

14. A mixer element for machines of the class described, comprising a rotor having radial vanes adapted to create paroxysmic turbulence in the mixture, said vanes being spaced apart coaxially and connected by a streamlined concave surface of semi-toric contour, said vanes having peripheral notches inclined relatively to the plane of the vane.

15. In a machine of the class described, a mixer chamber having a plurality of adjacent bays each of approximately lenticular shape with central inter-communication openings defined by annular walls of V-shape in cross-section at the annular region of juncture between said bays, and a mixing device comprising a rotor having radial vanes spaced apart coaxially and connected by a U-shaped annular concave surface into which said V-shaped junction walls extend concentrically.

GASTON S. P. DE BETHUNE.