Dec. 29, 1964 J. A. HAEBER ETAL 3,163,224

UNDERWATER WELL DRILLING APPARATUS

Filed April 20, 1962 6 Sheets-Sheet 1

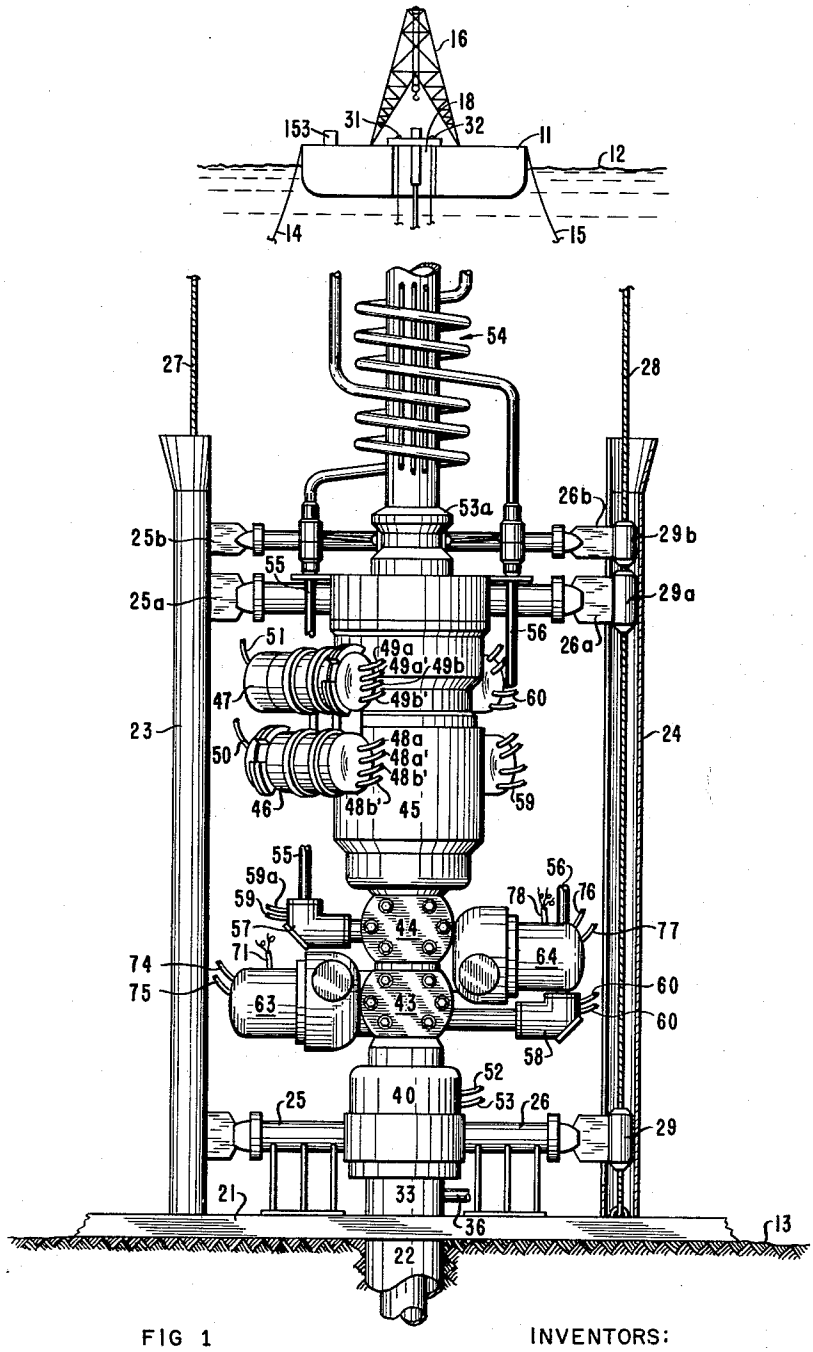

FIG 1

INVENTORS:
JOHN A. HAEBER
KENNETH W. FOSTER
BY: J. H. McCarthy
THEIR AGENT

UNDERWATER WELL DRILLING APPARATUS

Filed April 20, 1962 6 Sheets-Sheet 2

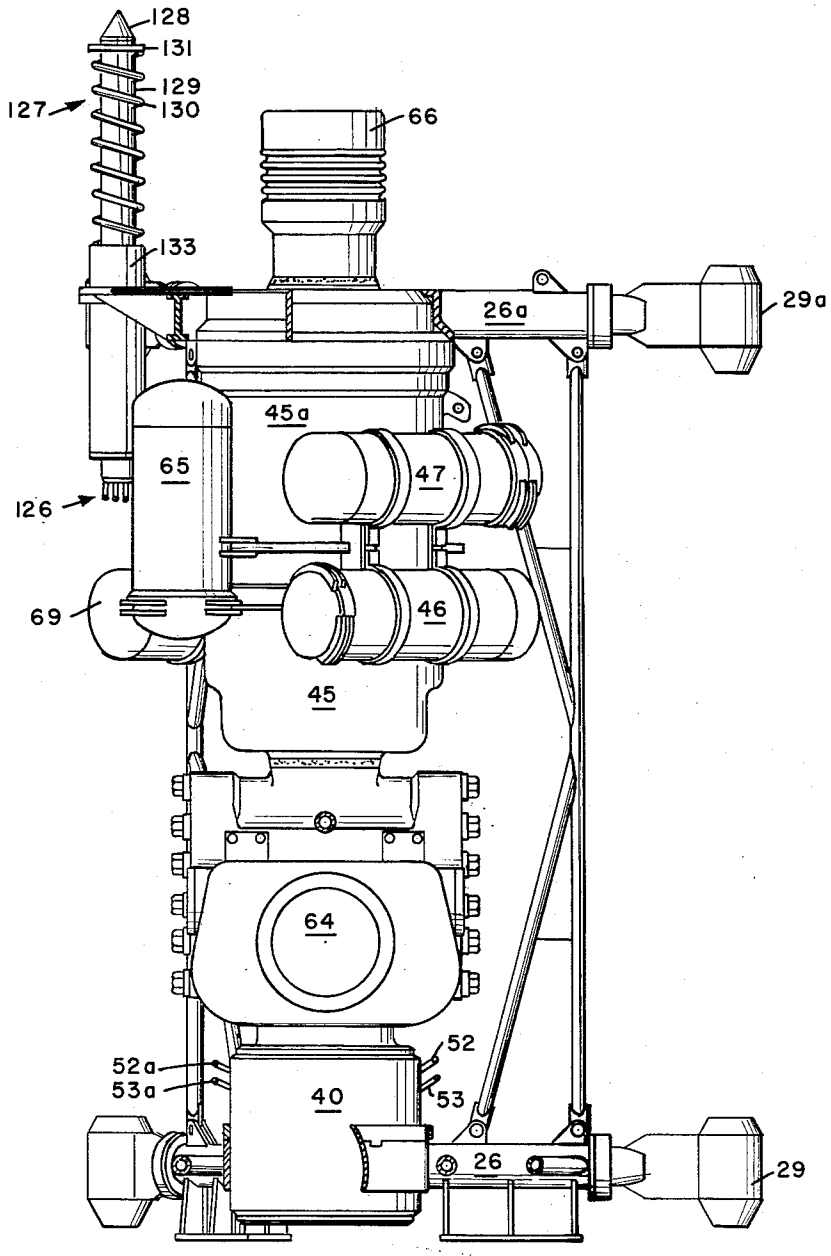

FIG. 2

INVENTORS
JOHN A. HAEBER
KENNETH W. FOSTER
BY J. H. McCarthy
THEIR AGENT

Dec. 29, 1964 J. A. HAEBER ETAL 3,163,224

UNDERWATER WELL DRILLING APPARATUS

Filed April 20, 1962 6 Sheets-Sheet 3

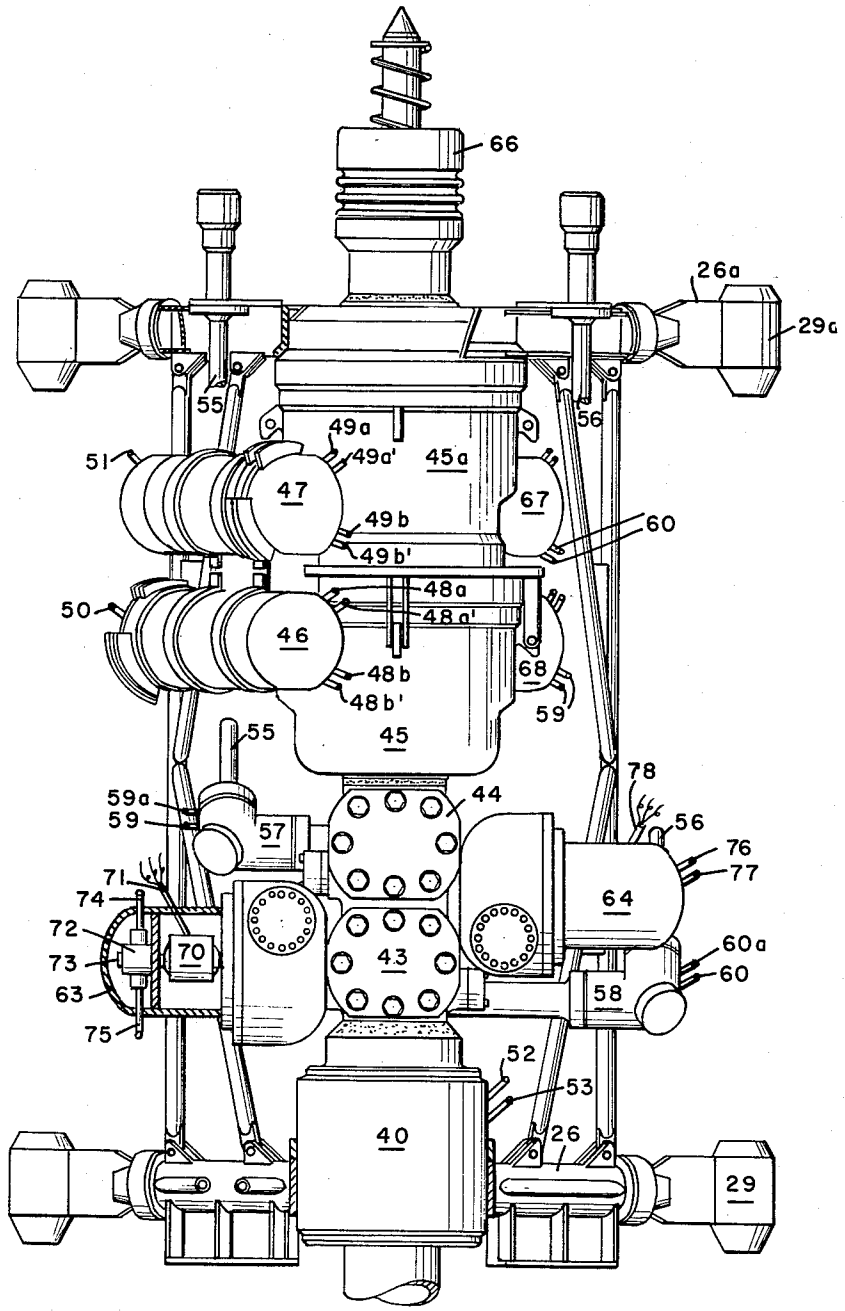

FIG. 3

INVENTORS
JOHN A. HAEBER
KENNETH W. FOSTER
BY J. H. McCarthy
THEIR AGENT

Dec. 29, 1964 J. A. HAEBER ETAL 3,163,224

UNDERWATER WELL DRILLING APPARATUS

Filed April 20, 1962 6 Sheets-Sheet 4

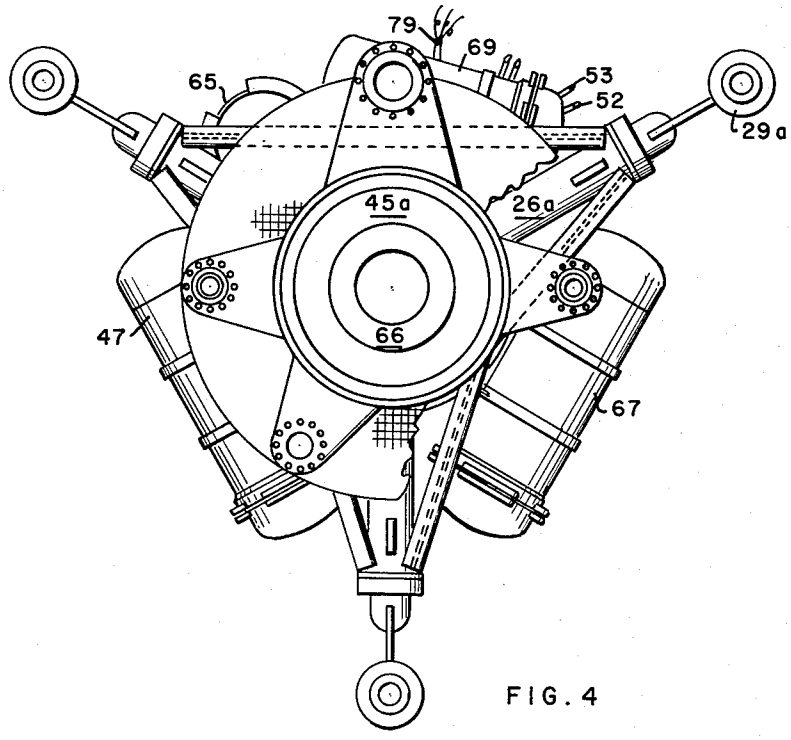

FIG. 4

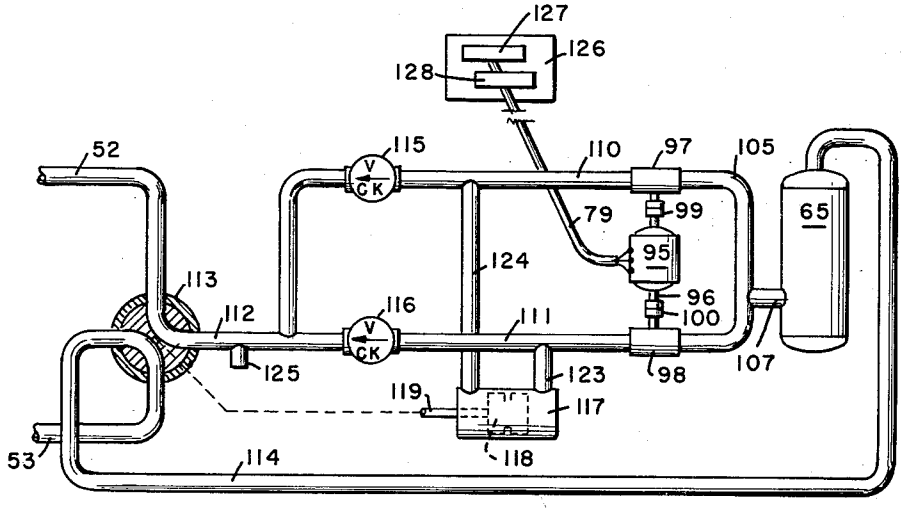

FIG. 5

INVENTORS
JOHN A. HAEBER
KENNETH W. FOSTER
BY J. H. McCarthy
THEIR AGENT

UNDERWATER WELL DRILLING APPARATUS

Filed April 20, 1962 6 Sheets-Sheet 5

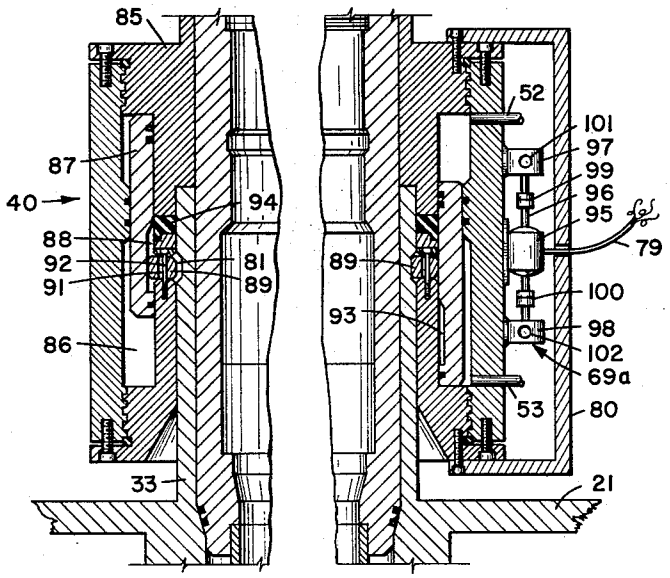

FIG. 6A FIG. 6B

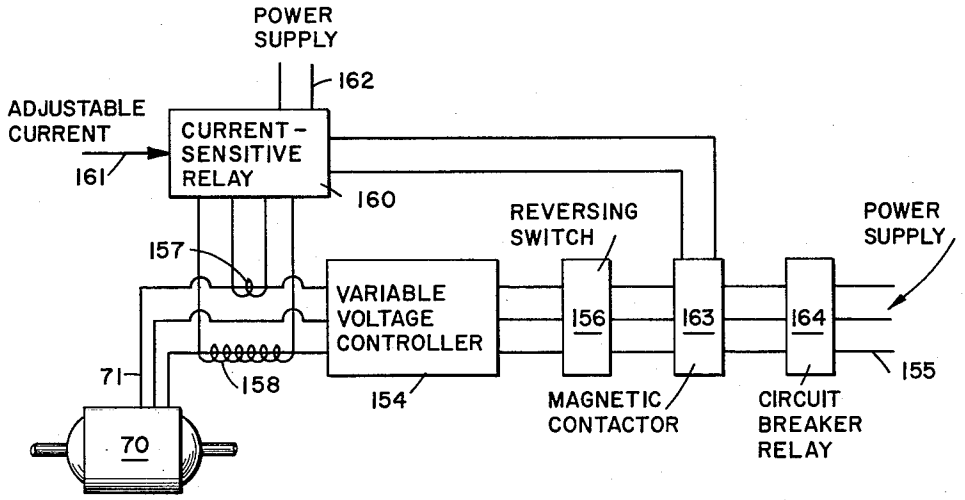

FIG. 7

INVENTORS:
JOHN A. HAEBER
KENNETH W. FOSTER
BY: J. H. McCarthy
THEIR AGENT

UNDERWATER WELL DRILLING APPARATUS

Filed April 20, 1962 6 Sheets-Sheet 6

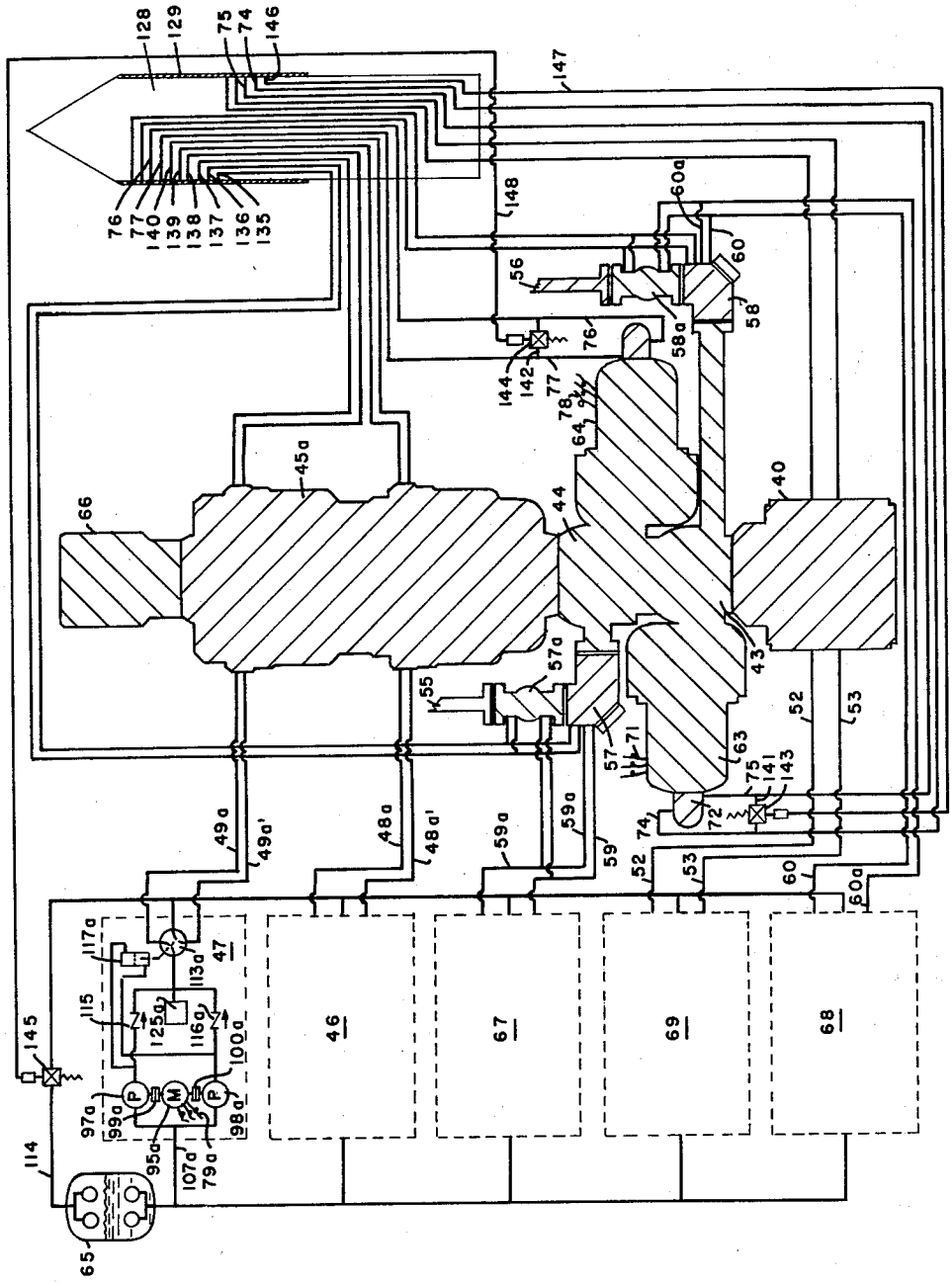

FIG. 8

INVENTORS
JOHN A. HAEBER
KENNETH W. FOSTER
BY A. H. Mc Carthy
THEIR AGENT

United States Patent Office 3,163,224 Patented Dec. 29, 1964

3,163,224

UNDERWATER WELL DRILLING APPARATUS

John A. Haeber and Kenneth W. Foster, Houston, Tex., assignors to Shell Oil Company, New York, N.Y., a corporation of Delaware

Filed Apr. 20, 1962, Ser. No. 189,112
3 Claims. (Cl. 166—66.5)

This invention relates to apparatus for use on offshore wells and pertains more particularly to wellhead apparatus adapted to be securely locked on a well casinghead positioned underwater or on any other tubular member anchored beneath the surface of the water. The present invention is especially concerned with an underwater well drilling and workover assembly adapted to be secured to an underwater base or well assembly.

In an attempt to locate new oil fields an increasing amount of well drilling has been conducted at offshore locations, such for example, as off the coast of Louisiana, Texas and California. As a general rule, the strings of casing in a well, together with the tubing strings or string, extend to a point above the surface of the water where they are closed in a conventional manner that is used on land wells, with a conventional wellhead assembly being attached to the top of the casing. Attempts have been made recently to provide methods and apparatus for drilling and completing a well wherein both the well casinghead and subsequently the wellhead assembly and casinghead equipment are located underwater at a depth sufficient to allow ships to pass over them. Preferably, the casinghead and wellhead equipment are located close to the ocean floor. In order to install equipment of this type underwater in depths greater than the shallow depths at which a diver can easily operate, it has been necessary to design entirely new equipment for this purpose. Thus, during the drilling, completion and production of oil and gas wells at an offshore location which have been drilled and completed in a manner described in copending patent application, Serial No. 830,538, filed July 30, 1959, and entitled "Underwater Well Completion Method," various pieces of equipment may be remotely connected to the underwater wellhead by the wellhead connector of the present invention.

During the drilling of an underwater well it is generally necessary to connect various pieces of equipment such as blow-out preventers or marine conductor pipes to a wellhead assembly situated on the ocean floor. For this purpose a wellhead connector as described in copending application, Serial No. 830,538, filed July 30, 1959, may be employed. After the well has been drilled the wellhead equipment may be mounted on the top of the well casinghead and securely locked and sealed in place by means of the wellhead connector or lock-down apparatus described in copending patent application, Serial No. 834,096, filed August 17, 1959.

The wellhead connectors described and illustrated in the above-identified patent applications comprise a connector housing having a vertical passage extending therethrough with a portion of the housing forming vertical wall means of a size to fit in close axially-slidable engagement with a tubular well member which is fixedly positioned in the well. The upper end of the tubular well member extends upwardly from the formation and is provided with latching grooves in one vertical wall thereof. The well connector apparatus is provided with hydraulically-actuatable locking dogs which are designed to be moved horizontally to engage the latching groove of the tubular well member to which the wellhead connector is being engaged. A hydraulically-operated blowout preventer is normally used in drilling operations and is fixedly secured to the top of the wellhead connector so that the bores of the connector and preventer are in register.

While hydraulically-operated equipment, such as wellhead connectors, blowout preventers, valves, etc. have been found to be satisfactory for use on wellheads positioned underwater, they have the drawback of requiring at least two high-pressure hydraulic lines which must be of flexible construction and of suitable materials to extend from an underwater wellhead to a drilling base located at the surface of the water while at the same time being able to resist deterioration by sea water. The greater the number of hydraulically-operated devices that are employed at the wellhead, the more hydraulic lines that are needed to extend from the operating base above the water to the underwater wellhead. In one wellhead installation a group of 21 hydraulic lines were needed. These were formed in three bundles of seven each for ease of handling and to prevent them from becoming entangled. A single bundle of hydraulic lines may be ten inches in diameter and is very cumbersome to handle.

It is therefore a primary object of the present invention to provide a wellhead assembly provided with latching devices, blowout preventers, valve, etc., which are designed to be remotely operated by transmitting power through an electrical transmission line extending from an operating base above the surface of the water to the wellhead connector apparatus near the ocean floor.

A further object of the present invention is to provide a well drilling and workover assembly formed of a number of wellhead components and including an electrically-actuated primary control system for said components as well as a hydraulically-actuated secondary control system adapted to override the primary control system for emergency operations.

These and other objects of this invention will be understood from the following description taken with reference to the drawing, wherein:

FIGURE 1 is a diagrammatic view taken in longitudinal projection illustrating a floatable drilling vessel anchored to the ocean floor with an underwater well drilling and workover assembly secured to a wellhead of a well being drilled;

FIGURES 2, 3, and 4 are side, front and top views of the underwater well drilling and workover assembly of the present invention, a portion of the top view being cut away for purposes of illustration;

FIGURE 5 is a flow diagram of one form of an electro-hydraulic operator to be employed for actuating components of the assembly such at the one shown in FIGURE 6;

FIGURES 6A and 6B are longitudinal view; taken in partial cross section, of one form of a wellhead connector unit equipped with a self-contained electrically-actuated hydraulic pressure system;

FIGURE 7 is a control circuit for the electro-hydraulic blowout preventer of the present well drilling and workover assembly; and,

FIGURE 8 is a hydraulic control circuit for the components of the well drilling and workover assembly of FIGURE 2.

Referring to FIGURE 1 of the drawing, a drilling vessel, platform or barge **11**, of any suitable flotable type is illustrated as floating on the surface of a body of water **12** and being substantially fixedly positioned over a preselected drilling location by suitable barge-positioning means or by being anchored to the ocean floor **13** by suitable anchors (not shown) connected to the anchor lines **14** and **15**. Equipment of this type may be used when carrying on well drilling operations in water depth varying from about 100 to 1500 feet or more. The drilling barge is equipped with a suitable derrick **16** as well as

other auxiliary equipment needed during the drilling of a well or during workover operations. The derrick 16 is positioned over a drilling slot or well 18 which extends vertically through the barge in a conventional manner. When using the equipment of the present invention, the slot of the barge 11 may be either centrally located or extend in from one edge. However, drilling operations may be carried out over the side of the barge or vessel without the use of a slot. Additionally, it is to be understood that the equipment of the present invention may also be used when drilling a well from any suitable operational base positioned above the surface of the water, such for example, as from a drilling barge having feet extending to the ocean floor or from a platform permanently positioned on the ocean floor.

In its simplest form an underwater wellhead structure may be only a tubular member sunk vertically in the ocean floor with its upper end extending thereabove. A typical underwater wellhead structure or assembly is illustrated in FIGURE 1 as comprising a base member 21 which is positioned on the ocean floor 13 and is fixedly secured to a conductor pipe or a large-diameter well casing 22 which extends down into a well, which has been previously drilled, and is preferably cemented or otherwise anchored therein. Thus, the base structure 21 is rigidly secured to the ocean floor in order to support two or more vertically-extending guide columns 23 and 24 adapted to receive and guide therein guide arms 25 and 26, 25*a* and 26*a*, and 25*b* and 26*b*, terminating in cylindrical guide members 29, 29*a* and 29*b*, respectively, which are arranged to slide on vertically-extending guide cables 27 and 28. The lower ends of the guide cables 27 and 28 are anchored to the base structure 21 within the guide columns 23 and 24 while extending upwardly through the water to the drilling barge 11 where they are preferably secured to constant tension hoists 31 and 32. It is to be understood that in an emergency a single guide arm on a guide cable extending between the base structure 21 and the drilling platform 11 may be employed to position a piece of equipment on the wellhead or the equipment may be stripped or lowered down over a pipe string, such as a drill string instead of using guide cables. A two-cable guide system will be described hereinbelow with regard to FIGURE 1 although generally a guide system having at least three guide cables is preferred and equipment for a three-cable guide system is shown in FIGURES 2, 3 and 4.

Centrally positioned above the base plate 21 and fixedly secured thereto, or to the conductor pipe 22, is a well casinghead unit 33 which may be provided with a cement circulation or fluid return line 36 wihch may be selectively closed by a remotely-operated valve (not shown). The guide arms 25 and 26 are illustrated as being connected to a wellhead connector unit 40 which may be hydraulically or electrically actuated to connect to the top of the casinghead 33 in a manner described in copending patent application Serial No. 105,068 filed August 24, 1961, of which this application is a continuation-in-part. In the above-identified patent application a wellhead connector 40 is provided with a self-contained electro-hydraulic operating unit which is provided with operating power by an electrical transmission line running from the barge 11 to the underwater wellhead assembly.

During the drilling, completion and working over a well, one or more blowout preventers are normally connected coaxially above the wellhead connector 40. In FIGURE 1 a series of four blowout preventers 43, 44, 45 and 45*a* are illustrated as being fixedly secured together and forming a unitary package with the wellhead connector 40, which package is adapted to be lowered into the casinghead 33 in any suitable manner. The lower blowout preventers 43 and 44 are of the ram type and may be mounted in a common housing while being provided with an electric motor for actuating each set of rams and a hydraulic overriding control system for actuating the rams in an emergency, as described in copending patent application Serial No. 105,068, filed August 24, 1961. Likewise, the upper blowout preventers which are preferably of the radially-contractible "cartridge-type" packing unit design, are mounted in a common housing, each packer of the blowout preventers 45 and 45*a* being actuated by a self-contained electro-hydraulic operating unit 46 and 47, respectively. The self-contained electro-hydraulic operating units 46 and 47 which are described in copending patent application Serial No. 105,068, filed April 24, 1961, are connected by means of hydraulic conduits 48*a* and 48*a'*, and 49*a* and 49*a'* to the interior of the blowout preventers 45 and 45*a*, while being supplied by electric power through transmission cables 50 and 51, respectively. In the event that the electro-hydraulic operators 46 and 47 do not contain their own reservoir pressure fluid, they may be connected by conduits 48*b* and 49*b* to a common reservoir 65 (FIGURE 2). A similar self-contained electro-hydraulic operating unit 69 (FIGURE 4) may be mounted on the present drilling assembly of FIGURE 1 for supplying pressure fluid to the conduits 52 and 53 of the wellhead connector 40 while other operating units 67 and 68 are employed to operate valves 57 and 58, which may be Cameron Type F valves with hydraulic operators, see page 1206, 1960–61 edition of Composite Catalog of Oil Field Equipment.

Preferably the combined blowout preventers 43, 44, 45 and 45*a* and the wellhead connector 40, as shown in FIGURE 2, are run together into position on top of the well by being lowered through the water from the drilling vessel 11 by means of a pipe string (not shown), commonly known as a running string, with the lower end of the running string being connected to the landing mandrel 66 (FIGURE 2) on the uppermost blowout preventer 45*a* by any suitable coupling or connector which may be similar in form to the wellhead connector 40, such as the landing head 53*a* (FIGURE 1). After the blowout preventers are installed the running string is replaced by a larger diameter pipe string known as a marine conductor pipe which is represented generally in FIGURE 1 by numeral 54. The landing head 53*a* is similar to connector 40 on the lower end of the conductor pipe.

While the various wellhead components, such for example as the wellhead connector 40 and the blowout preventers 43, 44, 45 and 45*a*, may be hydraulically, pneumatically or electrically actuatable, they are preferably hydraulically actuatable by means of electro-hydraulic operator units similar to units 46 and 47 or of another suitable design.

The drilling assembly or stack of blowout preventers 43, 44, 45 and 45*a* on the top of the wellhead connector is provided with one of preferably two small-diameter conduits which will be termed hereinbelow as choke and kill lines 55 and 56, respectively. The choke and kill lines 55 and 56 are employed to provide means for establishing fluid communication between the drilling vessel 11 and the well during drilling operations after one or more of the blowout preventers 43, 44, 45 and/or 45*a* have been closed during an emergency. Thus, the choke line 55 is in communication at its lower end with the interior of the assembly, and hence the well, below the lowermost blowout preventer 43 while the kill line 56 is in communication with the interior of the assembly below the upper set of blowout preventers 45 and 45*a*. The choke and kill lines 55 and 56 are provided with remotely actuatable valves 57 and 58, respectively, which have pressure hoses 59 and 59*a*, and 60 and 60*a* which extend to the surface or to electro-hydraulic valve operators 67 and 68, respectively.

As shown in FIGURE 1, the lowermost blowout preventers 43 and 44 are provided with operators 63 and 64, respectively, which are primarily electrically-powered operators for closing the rams of the blowout preventers. A typical ram-type blowout preventer and operator of

this type is described and claimed in copending patent application Serial No. 105,068, filed April 24, 1961.

The operator 63 of the blowout preventer 43 is shown diagrammatically in FIGURE 3 as including an electric motor 70 mounted within the operator housing and adapted to receive current through electrical transmission cable 71. Coupled to the shaft of the electric motor 70 is a hydraulic motor 72 adapted to drive the shaft 73 when the electric motor is not in use. Conduits 74 and 75 are arranged to extend through the wall of the operator housing to supply pressure fluid to drive the hydraulic motor 72. The operator 62 for the blowout preventer 44 is similar to the operator 63 and is provided with a pair of hydraulic conduits 76 and 77 and an electrical transmission cable 78. Thus it may be seen that the blowout preventers 43 and 44 are provided with operators 63 and 64 which are primarily electric and are provided with the transmission cables 71 and 78 which extend therefrom and run, together with other electric cables in the system, to the platform at the surface of the water. However, in the event that the electric motors in the operators 63 and 64 fail and/or the control circuits thereto become inoperative, pressure fluid can be supplied to the hydraulic motors carried in the operators 63 and 64 to open and close the blowout preventers 43 and 44. In the event that hydraulic blowout preventers were employed rather than electrically actuated blowout preventers as described with regard to FIGURE 3, electro-hydraulic operators of the type described with regard to operators 46 and 47 may be employed to provide pressure fluid for the hydraulically-actuated blowout-preventers.

For purposes of illustrating the primary control circuit to one component, say the wellhead connector 40, of the well drilling assembly of the present invention, the connector 40 and its operator 69 will be described in detail with regard to FIGURES 5 and 6 of the drawing.

In one form of a casinghead 33, as shown in FIGURE 6, a shoulder in the form of a groove 81 is provided in at least a portion of the outer wall of the casinghead 33, preferably near the top thereof, to provide means for temporarily locking other equipment to the casinghead.

The wellhead connector 40 of FIGURE 1 may take the form shown in FIGURE 6. In FIGURE 6, the wellhead connector 40 is a hydraulically-operated seal-and-lock-down head which is actuated by hydraulic pressure through pressure lines 52 and 53. The left-hand side of FIGURE 6 is shown with the well connector in its unlocked position while the right-hand side of FIGURE 6 shows the well connector in its locked position. The wellhead connector 40 comprises an annular housing 85 whose inner diameter is slightly larger than the outer diameter of the casinghead 33. The annular housing 85 is provided with an annular chamber 86 in which there is movably mounted an annular sleeve or piston 87 having a tapered face or shoulder 88 on the inside thereof. The annular chamber 86 is also provided with a plurality of locking blocks or dogs 89 each of which is provided with a vertical slot 91 which is substantially wider than a pin 92 passing therethrough thus permitting movement of the dogs 89 so that they extend, in an operative position, into the wall of the casinghead 33, as shown in the right-hand half of FIGURE 6.

In their inoperative position, the dogs 89 normally extend into the recessed portion 93 of the annular piston 87, being forced to this position when the wellhead connector 40 was originally forced over the casinghead 33. By applying a hydraulic pressure through pressure conduit 52, the annular piston 87 is forced downwardly so that its tapered shoulder 88 contacts the locking dogs 89 forcing it out of recess 93, from the position shown on the left-hand side of FIGURE 6. At this time the wellhead connector 40 would be fixedly locked on the casinghead 33. At the same time, an annular seal 94 carried by the housing 85 forms a fluidtight seal between the wellhead connector 40 ad the casinghead 33. While the electro-hydraulic operator 69 for the wellhead connector 40 is shown in FIGURES 2 and 4 as being mounted high on the assembly above the wellhead connector 40 and operatively connected thereto by conduits 52 and 53, an identical operator 69*a* may be mounted directly on the connector 40.

Fixedly secured on the wellhead connector 40 and carried thereby is an electric motor 95 whose shaft 96 is operatively connected to drive a pair of pumps 97 and 98 through a pair of overriding or centrifuged clutches 99 and 100. The overriding clutches may be of any suitable design, such for example as those manufactured by Morse Chain Company, Ithaca, New York, Catalog No. SF–59, page 131, the clutches 99 and 100 forming unidirectional drive assemblies mounted on the shaft between the motor and each of the pumps and arranged so that one pump operates or rotates when the motor turns in one direction and the other pump operates when the motor 95 reversed direction. Thus, it will be understood that only one pump 97 or 98 is operating at a time. The discharge ports 101 and 102 of pumps 97 and 98, respectively, are in fluid communication through a suitable piping circuit with pressure conduits 52 and 53. The entire hydraulic system is enclosed within a water-tight housing 80 through which electrical lead 79 extends.

One typical type of piping arrangement is illustrated diagrammatically in FIGURE 5 wherein the intake ports of the pumps 97 and 98 are connected to a conduit 105 which in turn is in communication with a reservoir tank 65 through conduit 107. The reservoir tank 65 may be an individual reservoir unit for the wellhead connector operator 69*a* only, or may be a larger reservoir common to all the operators on the assembly. The discharge conduits 110 and 111 from the pumps 97 and 98, join to form a common conduit 102 which enters one port of a four-way valve 113. The four-way valve 113 is preferably of the rotary type as illustrated diagrammatically, but may be of any suitable type well known to the art, for example a piston and slide valve type. Two of the other ports of the four-way valve are connected to fluid conduits 52 and 53 while the fourth port is in fluid communication through conduit 114 with the reservoir 65. Conduits 110 and 111 are provided with check valves or other unidirectional flow devices 115 and 116.

The four-way valve is provided with a hydraulically-operated valve operator diagrammatically shown as comprising a housing 117 having a piston 118 slidably mounted therein, with a piston rod 119 extending therefrom and mechanically linked to the rotating four-way valve 113, as represented by the broken line 120. One end of the valve operator housing 117 is in communication through conduit 123 with conduit 111 connected to the discharge of one pump 98, while the opposite end of the valve operator housing 117 is in fluid communication through conduit 124 with the conduit 110 in communication with the discharge of the other pump 97. The pumps 97 and 98 are preferably of the vane type or any other suitable type of pump. The electrical motor 95 employed to drive the pumps 97 and 98 is a reversible motor, preferably a polyphase induction motor having no brushes which reduces the number of elements in the underwater system that would be subject to failure. Switching means would be provided in a controller 126 at the surface on the barge, so that the power input to two of the leads of the motor 95 could be reversed in order to reverse the motor. The reversing switch 127, diagrammatically represented by a box in FIGURE 3 may be of any suitable type well known to the art. Additionally, leads are preferably provided with suitable automatically reset trip switches 128 which may be either magnetic trip switches or thermal cut-out trip or over-load switches.

In the operation of the present system, power would be supplied through electrical lead 79 from the barge to the motor 95 carried by the wellhead connector 40 (FIG-

URE 6). The switching at the surface would be arranged so that the motor 95 (FIGURE 5) would run in a direction to operate pump 97 while the clutch 100 would override and pump 98 would be stationary. Pressure fluid being discharged from the pump 97 would pass through conduit 110 and conduit 124 to force the piston 118 of the valve operator 117 in one extreme position, thus causing the four-way valve 113 to be turned to the position illustrated. Fluid from conduit 110 would then pass through check valve 115 and conduit 112 through valve 113 and conduit 52 into the upper end of the annular chamber 86 (FIGURE 6 right-hand side) so that the annular piston 87 would be forced downwardly and the locking dogs 89 would be forced into the groove 81 in the casinghead 33. A pressure of say 500 p.s.i. may be needed to start the piston 87 moving while a pressure of 1500 p.s.i. may be needed to force the piston to its final position. At the higher pressures at the end of the piston stroke a higher torque is generated by the motor 95 and the motor tries to stall causing more current to be demanded in the shut-off position, which demand causes the thermal or magnetic trip switches to open, thus shutting off the power to the motor 95. If desired, a pressure alarm transmitting device 125 of any suitable type may be provided in the system for electrically transmitting signals to the surface as a safety precaution. An electrical lead from this device would join lead 79 and run to the surface. The reverse operation of the present apparatus would raise the piston and unlock the dogs 89. This is accomplished by reversing the phase rotation of the electric power to the motor 95, causing the motor 95 to run in the opposite direction. The motor operating in the opposite direction drives pump 98 while the clutch 99 would override and pump 97 would not function as a pump. Pressure fluid being discharged from the pump 98 would pass through conduits 111 and 123 to force the piston 118 of the valve operator 117 in the other extreme position, thus causing the four-way valve 113 to be turned 90 degrees. Fluid from conduit 111 then would pass through check valve 116 and conduit 112, through valve 113 and conduit 53 into the lower end of the annular chamber 86 so that the piston 87 is forced upwardly, as shown in FIGURE 6, left-hand side.

While a preferred form of an electro-hydraulic operator has been described with regard to FIGURE 5, it is to be understood that any suitable type of operator could be employed. For example, while the system of FIGURE 5 provides for return of hydraulic fluid from the wellhead connector 40 to the reservoir 65, it is to be understood that the small amount of pressure fluid returning from the connector could be run into the sea thus eliminating conduit 114. Also instead of providing a reservoir the pump intakes may be open to the sea to use sea water as the operating fluid. Additionally, instead of using two pumps a single pump could be employed together with a four-way valve in the discharge line thereof for selectively switching fluid from the pump into conduit 52 or 53. The selector valve would have a control cable extending to the vessel at the surface.

Thus, it may be seen that the pressure control equipment package for use in underwater drilling and workover operations according to the present invention comprises a series of components adapted to be landed and fixedly secured to an underwater well base or a tubular member extending upwardly from the ocean floor. In the arrangement shown in FIGURES 2, 3 and 4, the pressure control well drilling assembly in one particular arrangement comprises the wellhead connector 40, blowout preventers 43, 44, 45 and 45*a*, and kill and choke valves 57 and 58, respectively. If desired, a second kill valve 57*a* and a second choke valve 58*a* may be employed and secured to valves 57 and 58 in a manner shown in FIGURE 8. All of the above-mentioned wellhead assembly components are provided with an electrically-actuated operator unit which have electrical transmission cables extending from the units to a drilling platform at the surface of the ocean. For ease of handling, the various transmission cables may be bundled together or a multiconductor transmission cable may be employed.

These electrically-actuated operators for the wellhead components comprise the primary control system for the various wellhead components. If all of the wellhead components are of a design adapted to be operated by hydraulic pressure fluid, electro-hydraulic operators similar to that described with regard to FIGURE 5 and shown as element 47 in FIGURE 8 may be used. If on the other hand the wellhead components are adapted to be electrically operated, as in the case of blowout preventers 43 and 44, they are preferably provided with electrically actuated operators of the type described with regard to operator 63 in FIGURE 3.

The primary control circuit for the well drilling assembly of the present invention is shown diagrammatically in FIGURE 8 with the electro-hydraulic operators 47 and 46, 67, 69 and 68 being arranged in fluid communication with blowout preventer 45*a*, blowout preventer 45, kill valves 57 and 57*a*, wellhead connector 40, and choke valves 58 and 58*a*, respectively. The interior of one of the electro-hydraulic operators 47 is shown as having an arrangement similar to that described with regard to FIGURE 5. Hence, the operator 47 (FIGURE 8) employs a pair of pumps 97*a* and 98*a* driven by motor 95*a* selectively through clutches 99*a* and 100*a* when the motor is provided with power through leads 79*a*. The valve 113*a'* is selectively changed from one position to the other by unit 117*a* while the pressure transducer 125*a* is employed to monitor the pressure in the system. The operator is connected through conduit 107*a* to the reservoir 65. It is preferred that there be some air space above the liquid in the reservoir 65 as the blowout preventers 45 and 45*a* employ unbalanced pistons to operate the units where more pressure fluid is employed to drive the piston up and close the packer than is necessary to drive the pistons down and open the packer. Since electrical blowout preventers 43 and 44 are employed, they are energized through their transmission cables 71 and 78, respectively.

In addition to the primary control system for the components of the wellhead assembly, a secondary or emergency control system is provided which employs an apparatus similar to that described in copending patent application, Serial No. 162,693, filed December 28, 1961. The secondary control system for the assembly of the present invention is shown in the right-hand side of FIGURE 8 and forms an overriding control system by which control of any or all of the wellhead components in the assembly may be regained in the event of failure of the primary control system. As shown in FIGURE 2 the wellhead drilling assembly of the present invention is provided with one portion of a secondary control system which in the form illustrated comprises a vertically-extending cylindrical member 127 which is operationally connected to the various wellhead components, 40, 43, 44, 45, 45*a*, 57, 57*a*, 58 and 58*a*, by suitable transmission lines, in this case, hydraulic lines or pressure hoses 126. Although the conduits 126 are described as being hoses, it is to be understood that they would normally be rigid tubing or piping. The cylindrical member 127 is in the form of a fluid manifold and comprises a central body mandrel 128 having a sleeve valve 129 slidably mounted for axial movement on the outer surface thereof. The sleeve 129 is normally maintained in its upper position, as illustrated, by means of a compression spring 130. The spring 130 bears against an outwardly extending flange 131 on the outside of the sleeve 129, at one end, while the other end of the spring bears against an internal flange (not shown) fixedly secured within a cylindrical spring housing 133.

As shown in FIGURE 8, the manifold mandrel 128 is provided with a plurality of fluid passageways with two

passageways in the mandrel **128** being in communication with each of the components of the wellhead drilling assembly. Thus, for example conduits **135** and **136** are in communication with the pressure conduits to kill valves **57** and **57***a*, while conduits **137** and **138** communicate to furnish a pressure operating fluid to blowout preventer **45***a* while conduits **139** and **140** are in communication with blowout preventer **45**.

In a like manner the hydraulic motors included with the electric operators **63** and **64** connected to blowout preventers **43** and **44** may be provided with pressure fluid through conduits **74** or **75** and **76** or **77** to drive the motors in one direction or the other. Any or all of the conduits in the manifold mandrel **128** may be supplied by a pressure fluid from a housing that is lowerable onto the top of the mandrel after the sleeve **129** has been removed or displaced, the operation being carried out in a manner described in copending application, Serial No. 162,693, filed December 28, 1961. The hydraulic circuit to the operators **63** and **64** of the blowout preventers **43** and **44** are provided with fluid bypass lines **141** and **142** having control valves **143** and **144** therein. In a like manner the return line **114** to the reservoir **65** of the primary control circuit is provided with a control valve **145**.

The control valves **143**, **144** and **145** are normally biased, spring-loaded, or detented to an open position when the primary control system, as illustrated on the left-hand side of FIGURE 8, is employed. Thus, with **145** open, fluid from the upper blowout preventer **45***a* would be allowed to return through line **49***a'* and pass through valve **113***a* and conduit **114** and its valve **145** to return to the reservoir **65**. The valves **143** and **144** are provided so that when the electric motors are being used in the operators **63** and **64**, any fluid trapped in the hydraulic motor **72** attached to the shaft **72** of the hydraulic **70** (FIGURE 3) will be allowed to circulate out conduit **74** (FIGURE 8), through bypass line **141** and its valve **143** and thence through conduit **75** back to the hydraulic motor. The use of valves **143** and **144** is desirable since the hydraulic motors in the operators **63** and **64** tend to act as a pump, at least when the motors are being driven in one direction. The manifold mandrel **128** is provided with a conduit **146** to supply a pressure fluid through connecting conduits **147**, **148** and **149** in order to actuate and close the valves **143**, **144** and **145** when the secondary control system of the present apparatus is being used. Fuid pressure would be supplied to close valves **143**, **144** and **145** before applying fluid pressure to actuate any of the various components of the well drilling assembly.

In FIGURE 8 one possible arrangement of components in the operator **47** is illustrated, it being understood that operators **46**, **67**, **69** and **68** could contain similar components.

The electric motor **70** (FIGURE 3) which is in the operator **63** of the blowout preventer **43**, and a similar motor contained within operator **64**, is preferably of a three-phase type having an electrical transmission cable **71** or **78** running to a controller **153** which is remotely positioned on the deck of the drilling vessel **11** (FIGURE 1). The controller **153** is provided with suitable circuits to each of the electrical motors positioned on the wellhead drilling assembly at the ocean floor. One suitable control circuit for an electric motor **70** of the blowout preventer operator **63** is shown in FIGURE 7 as including a variable voltage controller **154** which is electrically connected to the motor **70** through leads **71** and to a power supply **155** through a reversing switch **156**. The reversing switch is of any suitable commercial type adapted to reverse the current supply in two of the three leads to the motor **70** so as to run the motor forward or reverse whereby the rams of the blowout preventer may be opened or closed. It is desirable to employ a variable voltage controller or variable autotransformer **154** in the circuit so that the closing force of the rams of the blowout preventer may be selectively varied by varying the voltage of the current to the motor **70**. One suitable type of variable autotransformer is one known as "Adjust-A-Volt," manufactured by Standard Electric Products of Dayton, Ohio.

The amount of thrust exerted by the rams of the blowout preventer may be varied by manually adjusting the variable voltage controller **154** of the circuit. If desired, a current cutoff circuit may be provided in any suitable form as by a pair of current transformers **157** and **158** which are connected to a current-sensitive relay **160** having an adjustable set point device **161** and being connected to a power supply source **162** through a magnetic contactor relay **163** and a circuit breaker **164** in the main power line to the motor **70**. A suitable current-sensitive relay **160** may be a "Continuous Reading Meter Relay" as manufactured by Assembly Products, Incorporated of Chesterland, Ohio. A time delay relay is also built into the circuit so that the current-sensitive relay **160** will ignore in-rush current, on the starting of motor **70**. With this type of current cutoff circuit added to the main voltage controller circuit, when the predetermined thrust has been exerted by the rams against a pipe in the blowout preventer, the current transformers would sense an increase in current and the signal transmitted to the relay **160** would trip the magnetic contact to relay **163** in the power supply line leaving the rams locked against the pipe with the preselected force.

We claim as our invention:

1. Underwater well driving apparatus comprising a drilling vessel on the surface of the water, an underwater well assembly secured to the ocean floor and having upwardly-extending tubular member, and an underwater drilling and work-over assembly having a vertical bore therethrough and adapted to be mounted on said upwardly-extending tubular member of said underwater well assembly, said drilling and work-over assembly comprising

a marine conductor equipped at its lower end with a wellhead connector device having a vertical bore therethrough and having hydraulically-actuatable latching means, said connector device being of a size to fit with a tubular member of said well assembly,

blowout preventer means having hydraulically-actuatable rams and being fixedly mounted above said wellhead connector device and having a bore therethrough in axial alignment with the bore of said connector device,

electro-hydraulic operator means carried by said drilling and workover assembly and operatively connected to said rams of said blowout preventer means and said latching means of said wellhead connector device,

current-transmitting cable means connected to said electrically-actuated operator means and extending upwardly to a vessel at the surface of the water,

circuit means on said vessel and connected to said cable means for selectively actuating said operator means,

manifold means mounted on the outside of said underwater drilling and workover assembly, and

hydraulic-fluid conduit means connecting each of said operator means to said manifold means.

2. Underwater well drilling apparatus comprising a drilling vessel on the surface of the water, an underwater well assembly secured to the ocean floor and having upwardly-extending tubular member, and an underwater drilling and work-over assembly having a vertical bore therethrough and adapted to be mounted on said upwardly-extending tubular member of said underwater well assembly, said drilling and workover assembly comprising

a marine conductor equipped at its lower end with a wellhead connector device having a vertical bore therethrough and having hydraulically-actuatable latching means, said connector device being of a

size to fit in sliding telescopic arrangement with a tubular member of said well assembly,

blowout preventer means having hydraulically-actuatable rams and being fixedly mounted above said wellhead connector device and having a bore therethrough in axial alignment with the bore of said connector device,

first control circuit means for said wellhead connector and said blowout preventer means including,

electrically-actuated electro-hydraulic operator means carried by said drilling and workover assembly and operatively connected to said rams of said blowout preventer means and said latching means of said wellhead connector device,

current-transmitting cable means connected to said electrically-actuated operator means and extending upwardly to a vessel at the surface of the water, and

circuit means on said vessel and connected to said cable means for selectively actuating said operator means,

second control circuit means for said wellhead connector and said blowout preventer means including

manifold means carried outwardly on said assembly, and

conduit means interconnecting said manifold means and said rams of said blowout preventer means and interconnecting said latching means of said wellhead connector.

3. The apparatus of claim 1 including elongated guide means extending from said underwater well assembly to said vessel on the surface of the body of water, and guide means carried by said drilling and workover assembly adapted to engage said elongated guide means.

References Cited by the Examiner

UNITED STATES PATENTS

2,614,803	10/52	Wiggins	175—8 X
2,872,940	2/59	Lewis	251—1 X
2,923,531	2/60	Bauer et al.	175—7
3,021,909	2/62	Postlewaite	175—7
3,032,125	5/62	Hiser et al.	166—66.5 X
3,064,735	11/62	Bauer et al.	166—66.5

CHARLES O'CONNELL, *Primary Examiner.*