A. L. BLOMFIELD.

SETTLING APPARATUS.

APPLICATION FILED APR. 21, 1916.

1,227,107.

Patented May 22, 1917.

2 SHEETS—SHEET 1.

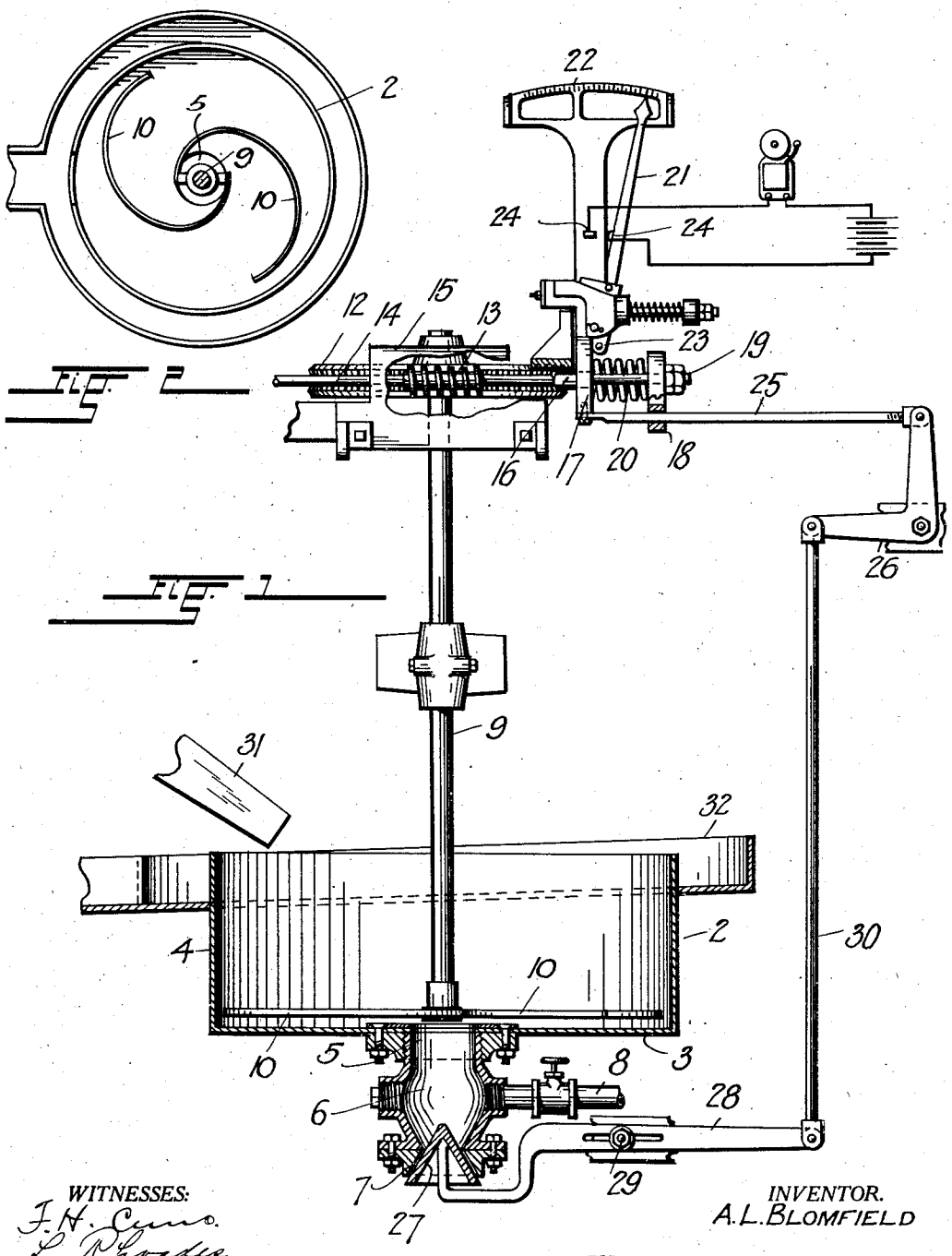

Fig. 2

Fig. 1

WITNESSES:

J. H. Cuno.

L. Rhodes

INVENTOR.

A. L. BLOMFIELD

BY

ATTORNEY.

A. L. BLOMFIELD.

SETTLING APPARATUS.

APPLICATION FILED APR. 21, 1916.

1,227,107.

Patented May 22, 1917.

2 SHEETS—SHEET 2.

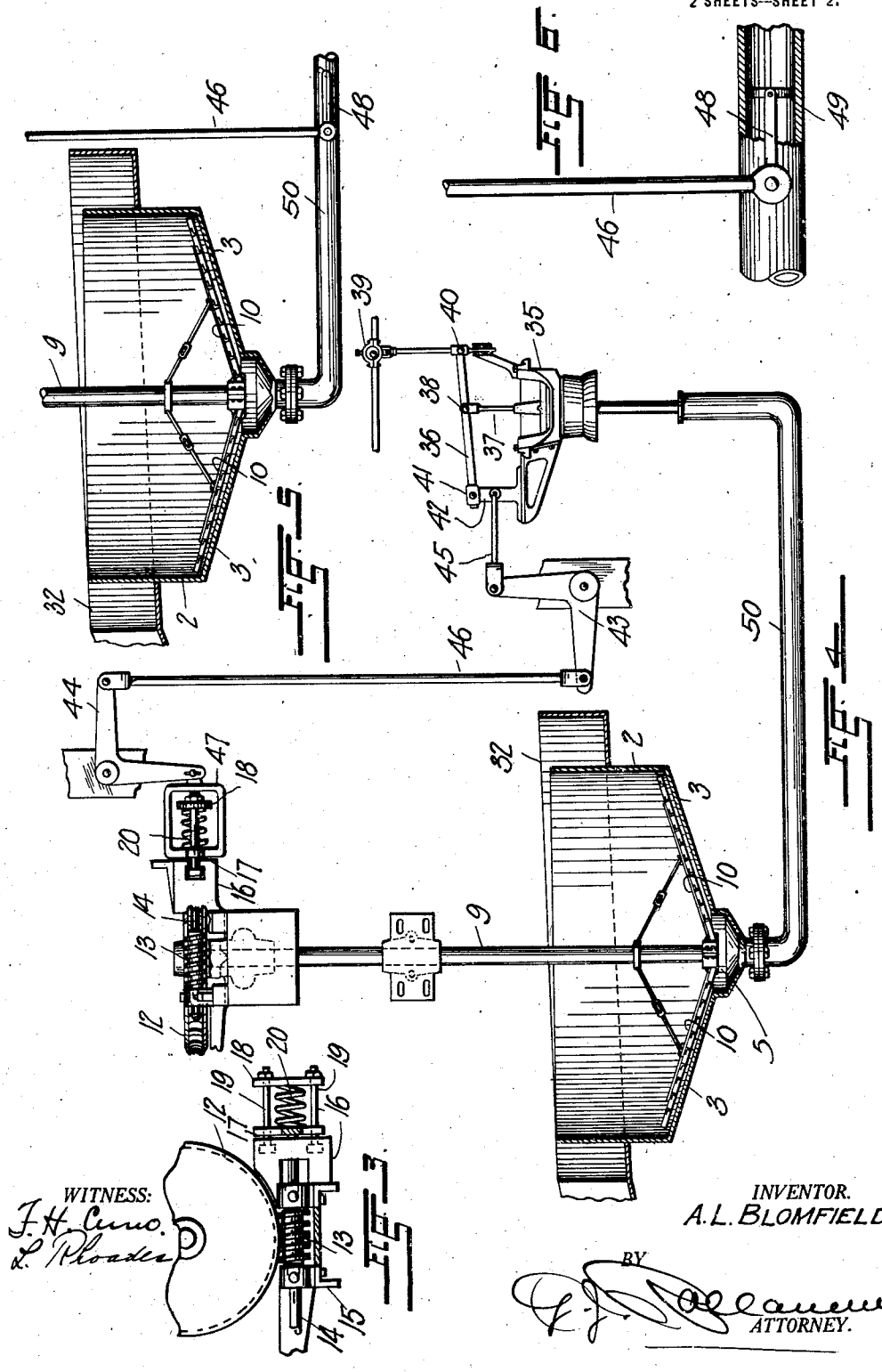

WITNESS:
F. H. Cuno.
L. Rhoades

INVENTOR.
A. L. BLOMFIELD.

BY
G. J. Ollanvin
ATTORNEY.

UNITED STATES PATENT OFFICE.

ALFRED L. BLOMFIELD, OF DENVER, COLORADO.

SETTLING APPARATUS.

1,227,107. Specification of Letters Patent. Patented May 22, 1917.

Application filed April 21, 1916. Serial No. 92,771.

To all whom it may concern:

Be it known that I, ALFRED L. BLOMFIELD, a subject of George V, King of England, residing at Denver, in the county of Denver and State of Colorado, have invented certain new and useful Improvements in Settling Apparatus, of which the following is a specification.

This invention relates to improvements in settling apparatus and its primary object resides in the provision of a mechanism which is actuated by an excess of material settling on the bottom of a container to automatically regulate the discharge thereof.

By the use of my invention, the liquid contained in the material discharged from the container is constantly maintained near a predetermined percentage, and the employment of dewatering devices is consequently obviated.

My invention relates more particularly to apparatus for the classification of coarse and fine solids in ore pulp or other finely divided material, or for separating the solids from liquids in which they are contained.

The above and other objects of my invention, all of which will fully appear in the course of the following description, I attain by the features of construction, arrangement of parts and combinations of devices shown in the accompanying drawings in the various views of which like parts are similarly designated, and in which,

Figure 1 represents a vertical section of a settling tank to which my invention is applied,

Fig. 2, a plan view of the tank shown in Fig. 1, drawn to a reduced scale,

Fig. 3, a sectional plan view of the worm shaft-bearing and adjacent parts of the thrust-mechanism shown in Fig. 1,

Fig. 4, a sectional elevation of a modification of my invention, in which the resistance encountered by the impelling mechanism in the bottom of the container, regulates the discharge by automatically changing the stroke of a pump by which the thickened matter is drawn through the discharge-opening of the container,

Fig. 5, a sectional elevation showing a method of controlling the discharge from the container by automatically operating a valve in the conduit which connects the discharge-opening with the pump, and

Fig. 6, an enlarged view of the valve in the construction illustrated in Fig. 5.

The reference numeral 2 designates a container having in its preferred form, a substantially flat bottom 3 and a cylindrical upright wall 4. An outlet 5 in the bottom of the vessel connects with the chamber 6 of an automatically operating valve 27, the construction and arrangement of which will hereinafter be more fully described.

A shaft 9 suspended in bearings above the container, carries at its lower extremity a series of scraper arms 10 which extend above and in suitable proximity to the bottom 3.

In the form illustrated in the drawings, the scraper-arms are curved spirally from the central shaft outwardly to points in proximity to the wall 4, but they may be of any other construction adapted to impel material settling upon the bottom of the vessel, toward the outlet 5 which preferably is centrally disposed with relation to the circumferential wall of the vessel.

The shaft, which in the operation moves about an axis coincident with that of the container, is slowly rotated by means of a worm movement consisting of a toothed wheel 12 mounted at the upper end of the shaft, and a worm 13 on a transversely extending shaft 14 which meshes with said wheel.

In the form of my invention shown in the drawings the usual thrust-bearing for the worm shaft is replaced by a bearing 15 which supports the worm shaft for rotation and permits of a limited longitudinal movement of the same.

The worm-shaft engages at one of its ends with the head 16 of a thrust-block 17 slidably mounted with relation to an abutment 18 which by means of bolts 19 is connected with the bearing which supports the worm shaft.

A coiled spring 20 disposed between the sliding thrust-block and the abutment, provides a resilient element to yieldingly oppose endwise displacement of the worm-shaft when the resistance offered by the settled material on the bottom of the container, to the rotary movement of the scrapers, increases beyond a predetermined degree.

The resistance which causes the operation of the mechanism for the automatic acceleration of the discharge, is the result of an excess of settled matter on the bottom of the container, which increases the weight of the material settled upon the bottom of the vessel and either the density or the thickness of

the same, and it will be readily seen that means other than those herein described may be designed to regulate the discharge by any one of the above-mentioned differences in the condition of the bed of settled material on the bottom of the container.

In settling apparatus in which the settled matter is drawn from a container by a pump or other suction device, the means employed to vary the discharge in ratio to the degree of resistance encountered by a scraper moving the material toward the discharge opening, may be designed for regulating the stroke of the pump piston or for operating a valve in a conduit which connects said opening with the pump.

In Fig. 4 of the drawings, the reference numeral 35 designates a pump used for drawing the settled material through the discharge-opening 5 in the bottom of the container 2. The pump has a piston which is reciprocated through the intermediary of a lever 36 pivotally connected with the piston-rod 37 as at 38 and with an eccentric 39 on a driving shaft as at 40 and fulcrumed by means of a sliding sleeve 41 pivoted upon a standard 42 which is slidingly mounted upon the housing of the pump.

A pair of bell-cranks 43 and 44 and rods 45 and 46 connect the sliding standard with a yoke 47 on the thrust-block 17 so that when the latter is moved by longitudinal displacement of the worm shaft, the standard 42 will be moved correspondingly upon the valve-housing to vary the position of the fulcrum of the lever relative to the point at which the latter is connected with the piston-rod, and thereby change the stroke of the piston and the rate at which the material is drawn from the container.

In Figs. 5 and 6, the rod 46 which in the constructions shown in Fig. 4, connects with the bell-crank 44 attached to the yoke 47, is at its lower end pivotally secured to a lever-arm 48 on a butterfly-valve 49 which controls the flow through the conduit 50 connecting the outlet 5 of the container with the pump 35.

A pointer 21 pivotally mounted for co-operation with a graduated scale 22, has an arm 23 projecting into the path of the thrust block 17, and a pair of contacts 24 in an electric-alarm-circuit are relatively disposed to engage after a determinate movement of the pointer above its pivot.

If by an increased resistance to the movement of the shaft 9, the worm 13 is longitudinally displaced, the thrust block moves against the pressure of the spring and by engagement with the arm 23 imparts a movement to the pointer along the scale to indicate the degree of resistance which caused its operation.

At a determinate point in the movement of the worm, the alarm circuit is closed by engagement of the contacts to audibly give notice of the condition of the bed of settled matter on the bottom of the vessel.

A pitman 25 connects the thrust-block with an arm of a bell crank 26 which is mounted for oscillation at a distance from the vessel.

The valve 27 which as mentioned hereinbefore, controls the discharge of the settled matter from the container, is, in the preferred form of my invention, made of conical form and disposed for vertical movement toward the seat 7 at the lower end of the chamber 6.

The valve is fixed at an end of a lever 28 which is fulcrumed as at 29 and which at the end of its opposite arm is connected with the bell-crank 26 by means of a rod 30.

When by increased resistance to the movement of the scrapers, the thrust-block is moved against the pressure of the spring 20, it imparts through the intermediary of the bell-crank and the lever, a downward movement to the valve 27 which in consequence is separated from its seat and thereby accelerates the discharge through the outlet 5.

From the above description it will be seen that by adjustment of the spring, the degree of density at which the settling matter is delivered from the container, is accurately regulated and that by action of the mechanism herein described, the determined degree of density is automatically maintained, inasmuch as any increase in density of the matter on the bottom of the container, or any excessive accumulation of the same, is immediately dissipated by the proportionally accelerated outflow past the lowered valve.

In the operation of the settling apparatus to which my invention is applied, pulp may be fed into the vessel by means of a feed-chute 31, and a launder 32 surrounding the upper edge of the container may be provided to receive the overflow consisting of either clear liquid or liquid and suspensions.

If the apparatus to which my invention is applied, is a gravity classifier in which the separative action is accelerated by an upward flow of liquid, a valve-controlled conduit 8 may be provided to connect an inlet in the chamber 6 above its valve seat, with a conveniently located source of water supply.

Having thus described my improved valve-operating mechanism in the best form at present known to me, I desire it understood that variations in the construction and arrangement of its parts, other than those hereinbefore referred to, may be resorted to within the spirit of my invention as set forth in the following claims:

1. In combination, a container having an opening for the outflow of settling matter, a valve controlling the flow through said opening, an element for moving settling matter

toward said opening, and mechanism for the adjustment of said valve, adapted to be actuated by a determinate resistance to the movement of said element.

2. In combination, a container having an opening for the outflow of settling matter, a valve controlling the flow through said opening, a rotary sweep for moving settling matter toward said opening, and mechanism for the adjustment of said valve, adapted to be actuated by a determinate resistance to the movement of said sweep.

3. In combination, a container having an opening for the outflow of settling matter, a valve controlling the flow through said opening, mechanism for the adjustment of said valve, adapted to be actuated by an excess of settling matter on the bottom of the container, and means operatively associated with said mechanism, for indicating the extent of the movement of the valve, exteriorly of the container.

4. In combination, a container having an opening for the outflow of settling matter, a valve controlling the flow through said opening, a driven element for moving settling matter toward said opening, a driving element capable of displacement by a resistance to the movement of the driven element, and mechanism for the adjustment of said valve, adapted to be operated by said displacement.

5. In combination, a container having an opening for the outflow of settling matter, a valve controlling the flow through said opening, a rotary device for moving settling matter toward said outlet, a worm wheel connected with said device, a worm engaging said wheel and mounted for longitudinal displacement, and mechanism for the adjustment of said valve, adapted to be operated by said displacement of the worm.

6. In combination, a container having an opening for the outflow of settling matter, a valve controlling the flow through said opening, a driven element for moving settling matter toward said opening, a driving element capable of displacement by a resistance to the movement of the driven element, mechanism for the adjustment of said valve, adapted to be operated by said displacement, and a spring to resiliently oppose the operation of said mechanism.

7. In combination, a container having an opening for the outflow of settling matter, a device for moving settling matter toward said outlet, and mechanism for regulating the flow through said opening, adapted to be actuated by determinate resistance to the movement of said device.

8. In combination, a container having an opening for the outflow of settling matter, a rotary sweep for moving settling matter toward said opening, and mechanism for regulating the flow through said opening, adapted to be actuated by a determinate resistance to the operation of said sweep.

In testimony whereof I have affixed my signature in presence of two witnesses.

ALFRED L. BLOMFIELD.

Witnesses:
G. J. ROLLANDET,
L. RHOADES.