(12) UK Patent Application (19) GB (11) 2 136 188 A

(43) Application published 12 Sep 1984

(21) Application No 8304933

(22) Date of filing 22 Feb 1983

(51) INT CL³
G11B 15/02

(52) Domestic classification
G5R B264 B346 B36Y B37Y B436 B449 B638 B682 B785 B788 QA

(56) Documents cited
None

(58) Field of search
G5R
H4K

(71) Applicants
Steven Mustaga Sweid,
4A Langdale Road, Hove, East Sussex BN3 4HN,
Sami Mouhannad Sweid,
Elboskue, C/Anastro 29, 4th Biso 2, Madrid, Spain

(72) Inventors
Steven Mustaga Sweid,
Sami Mouhannad Sweid

(74) Agent and/or Address for Service
Steven M. Sweid, P.O. Box 219, Brighton BN1 6BJ

(54) Voice actuated instant record-replay device for short speech

(57) A compact voice actuated audio electronic device, that repeats instantly and automatically the short message spoken into it. Though the device acts basically like a parrot, a wide variety of voice reproduction could be used, such as low or high-pitch sound, computer voice, combination with echo effect, or combination with an intermediate tune.

Regarding the short length of the recorded message (in seconds), a micro magnetic-tape or disc drive, or ultimately solid state chip memory could be used for the operation of the device.

An insertion unit version of the device could be used for incorporation into dolls or figures. The device serves entertainment and educational purposes.

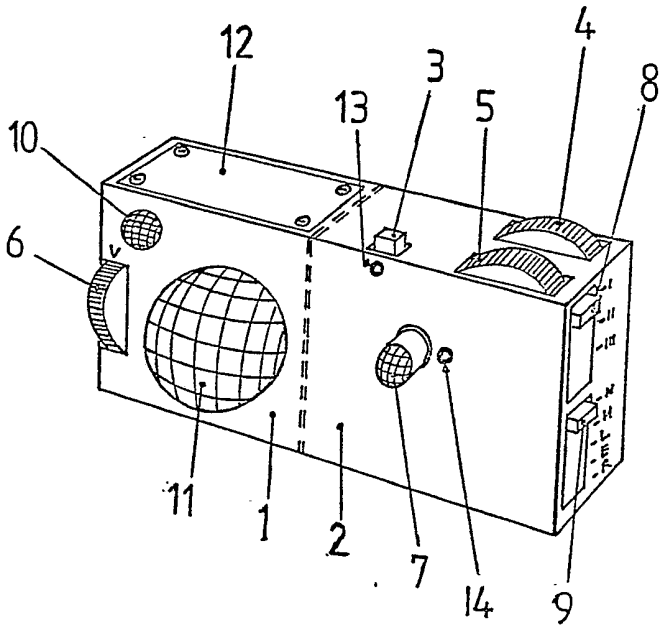

FIG - 1

GB 2 136 188 A

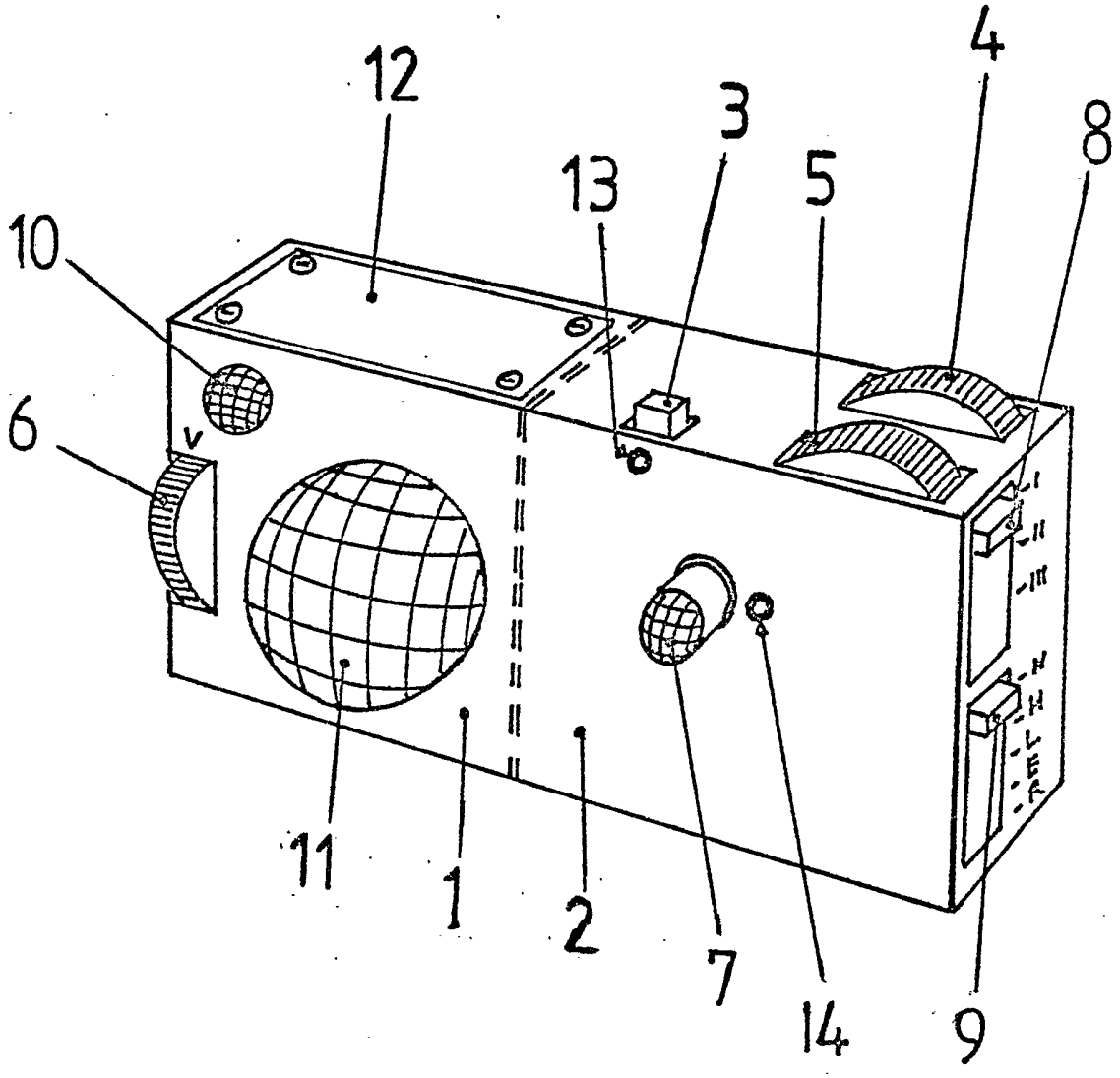

FIG - 1

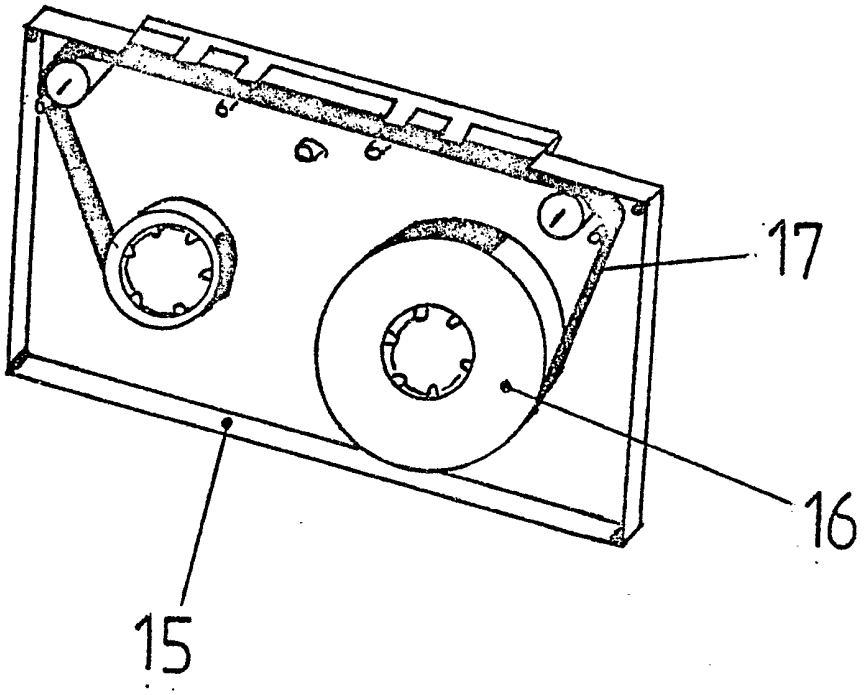

FIG - 2

SPECIFICATION

Voice actuated instant record-replay device for short speech

This invention, which consists of a compact audio device, relates to automatic audio recording and replay devices, that combine a voice actuation facility. Specifically, the new invention acts as a listening and talking partner, that repeats immediately a word or a sentence spoken into it.

Audio tape recording devices have gained widespread popularity over the years, with the newly evolved handheld tape recorders contributing strongly to the promotion of this type of products. The wide range of applications covered include the portable office dictating devices and some repeating devices used for announcements and telefon answer equipment. Further, many such devices have been applied to the educational field, such as language courses.

On the other hand, a different type of instruments equally popular is the talking device used in dolls or electronic games, where a word or a short sentence, that has been initially prerecorded by the manufacturer could be repeatedly uttered at request, through the activation of a triggering mechanism.

The present invention, which is a light compact device, combines both features of recording and repetition, whereby the instant repetition is limited to short audio messages (Approx.30Sec). Hence, the difference with typical recorders is the short length of recording. Furthermore, through the incorporation of a voice actuated component a new idea emerges that covers a wide range of new applications. When the person (speaker) speaks into the device, the voice actuated component would immediately initiate the recording and sustain the recording action until the speaker interrupts his speech with a long enough silence interval, the width of which is preset beforehand in the device (1—5 Sec) by the speaker.

Once this silence period is exceeded, the recording is automatically halted, to be instantly followed by the replay of the recorded sentence. The person would therefore be able to hear the same words he had just uttered without touching the device.

The device acts as an electronic parrot, that repeats each time the same words or sentences after the speaker. The speaker is hence able to listen to his own voice and words after each spoken message.

The invention will now be described with reference to the accompanying drawings in which:

Fig 1 is a perspective view of the repeater device displaying the important keys and other visible parts.

Fig 2 displays the drum technique used in the cassette unit, as a means to increase the speed of rewind.

Referring now to the drawings, wherein each element has been assigned a single reference numeral throughout the figures, there is illustrated a perspective of the present invention as regards to the geometrical configuration, external functions and an indication to the tape recording drum technique used to speed up the tape rewind action, an important requirement for this type of application.

The whole device which is depicted in Fig 1 is divided in two sections 1 and 2 for the sake of convenience. Section 1 incorporates the mechanical as well as the magnetic heads used for recording and replaying. In addition, the recording microphone 10, the loudspeaker 11, and the output volume knob 6 are included in this section. For the insertion of the microcassette 15 (Fig 2) into the device, the flat cover 12 could be unscrewed and removed. The reason being, that following longterm utilization of the device, a replacement of the micro-cassette might prove necessary to regain sound quality.

Roughly speaking, section 1 represents a typical compact micro-cassette tape recorder as commonly used for dictating purposes, omitting the major external control knobs for recording, replaying, rewind and stop actions. Section 2 is the brain of the device. The device is turned on or off through the knob 3. The "ON" state is made visible through the illumination of LEC 13. The "ON" state indicates that the overall system is activiated, i.e the sound sensitive sensor 7 is operational and is able to trigger the recording mechanism once a sufficiently powerful sound wave is detected. The level of soundpower required to trigger the recording is adjusted by the regulating knob 5. This facility will prevent undesirable sound in the vicinity from triggering the device. To further reduce the influence of ambient sound, the audio sensor 7 has a unidirectional sensitivity. The moment the device is activated by an appropriate audio signal, the sound recording is initiated, indicated visibly by the illumination of LED 14. Microphone 10 will then perform the receiving function for the recorder. The recording state is sustained until a silence pause of a present span length is exceeded, which will instantly stop the recording action. The length of the silence pause is set by knob 4. This could be varied between 1 and 5 Sec. Immediately following a swift tape rewinding action, the recorded portion of the tape starts to be replayed. This replay action, which is designated as "repetition", could be performed once or multiple times depending on the setting of knob 8. In addition, an option is included in the device to generate distorted reproduction of the recorded sound message, such as high or low pitch, Echo effect, or robotic voice. This is intended to produce funny effects. Obviously, the device could be designed to incorporate solely one of the desired actions of the repetition rate and sound variation.

A centre part of the invention is the actual recording unit which should fulfil the requirements of a quiet and purely electrical activation of recording, rewinding and replaying mechanisms.

Most recent handheld micro-cassette dictating devices available in the market incorporate touch button operation which fulfil those requirements There, the magnetic heads are placed in position on the tape automatically.

Another stringent requirement would be the ruggedness of the magnetic tape that will have to undergo an unlimited number of rewinding and replaying. Since the required length of the tape is limited to a maximum recording time of 30 Sec, which corresponds roughly to a tape length of 35 cm, the thin tape commonly used in micro-cassettes for the purpose of maximising the duration of recording, could be replaced with a thicker tape variety. The tape 17 (Fig 2) is rolled around a hollow and circular drum 16, the latter occupying the position around the rewind drive axis in the microcassette 15. This drum which is made of light plastic, will speed up the rewind action of the tape. The tape could then be rewinded in a fraction of a second, even for the maximum sentence length of 30 sec.

Despite the reliability of such a combination, a longterm use of the device might ultimately lead to a gradual deterioration of the magnetic tape, which would result in poorer sound quality. The micro-cassette is simply removed and replaced with a new unit.

The production of a special microcasette is simple and convenient, since it involves available components such as the casing of the micro-cassette.

In connection with the magnetic tape, an electronic timer element is incorporated in section 2 of the device to monitor the recording time and hence register the end of the recorded sentence. In the possible event that the end of the tape is reached during recording, it is this timer that would immediately initiate the replay sequence. In other words, if the speaker keeps on talking without interruption for more than 30 sec (maximum length of tape) the device will record to the end of the tape and will then automatically replay the content, hence interrupting the speaker directly.

The solution illustrated in Fig 2 represents one of many possibilities of performing a short and automatic instant replay. A small magnetic disk might also prove appropriate for such an application. Another possible approach would be to store the short audio sentence in solid state chip memory. This would still require a huge capacity of memory bits (approx 4 Megabytes!), and analogue-digital-analogue converters which at present is economically unfeasible for a commercial product.

The unit displayed in Fig 1 serves the purpose of describing the main functions. Obviously, the device could be easily incorporated in different attractive housings, depending on the particular application.

This invention is aimed particularly at the consumer market. Whether one considers serious applications, such as a speech or pronounciation aid, or a memory aid, or even fancy applications such as a "Think loud" device or a talking partner. or simply as a gimmic for fun and entertainment at home, office or in the car, this new invention does not only present a new product idea, more importantly it does create new market demands.

CLAIMS

1. A fully automatic, compact voice actuated instant record-replay device, specifically designed for short audio messages, typically the length of a sentence, that replays automatically and immediately the recorded audio message. Functionwise, the said device could be defined as an electronic parrot. The said device comprises a recording unit, where the short audio message is recorded through a microphone on to a magnetic tape, or a magnetic disk or a solid state chip memory; A sound replay unit, a voice actuation unit with a voice level control, a sound replay unit, an automation function control unit, and multiple reproduction combination unit. Following Switch-On action of said device and setting of sound level for activation of voice actuation, the said device will be ready for recording. As the voice actuation is triggered, the said device starts recording the message, and will continue recording until a silence pause of a preset duration will signal the device to stop recording. Following this sequence, the device will repeat immediately and automatically the same recorded message through a loudspeaker. Depending on the chosen in-built functions or settings in the said device, the reproduced message could be repeated once or a few times, in the original or in a distorted audio form, such as low or high pitch sound, computer voice (synthesized), combined with Echo effect, with or without an intermediate short signalling sound before each replay. Following the end of replay cycle the said device returns automatically and immediately to initial ready-to-record state. Microphones and loudspeakers of said device could be integrated in to the whole unit or be mounted separately on a headset and electrically connected to the main device. The said compact device, that compares in its physical dimensions to the conventional handheld microcassette dictating recorder, is enclosed in conventional housing common to recorder devices, for serious applications, such as a support for new language learning, speech improvement, thinking loud device, in the office, at home or in the car, or otherwise enclosed in a character like housing, such as a doll, a parrot or a creature, for fun in general or for the entertainment and education of children in special.

2. A silence pause presetting circuit according to claim 1, whereby externally a knob is used for the selection of the duration of the silence pause (0.5 to 5 Sec Approx) required for the interruption of the recording action. Internally, a digital counting circuit is used to omit this pause in the replay sequence. Hence only the recorded message is replayed without the silence pause, though the system was recording during the pause.

3. A special microcassette as described and illustrated in the specifications and which consists of a conventional microcassette housing, including however a large diameter cylindrical drum made of very light material, and the said drum occupying the rewind center of the cassette, with the very short (only a few feet) and rugged magnetic tape wound around said drum. This special said replaceable microcassette has the purpose of enhancing the speed of rewind action, and serving as a replaceable item once the old tape is worn out. The use of this special microcassette is restricted to the cases where the recording process is performed with magnetic tape.

4. Said device incorporated in a doll or creature figure as claimed in claim 1, and is used as an entertaining and educational toy for children. Said device will be simplified for this application, with the major and limited functions preset by manufacturer.

Printed in the United Kingdom for Her Majesty's Stationery Office, Demand No. 8818935, 9/1984. Contractor's Code No. 6378.
Published by the Patent Office, 25 Southampton Buildings, London, WC2A 1AY, from which copies may be obtained.