US 20060070170A1

(19) United States

(12) Patent Application Publication

(10) Pub. No.: US 2006/0070170 A1

(43) Pub. Date: Apr. 6, 2006

Copeland et al.

(54) SHOCK ABSORBING AND COOLING STRUCTURE

(75) Inventors: **Steve Copeland**, Barrie (CA); **Robert G. Dickie**, Newmarket (CA)

Correspondence Address:
SAND & SEBOLT
AEGIS TOWER, SUITE 1100
4940 MUNSON STREET, NW
CANTON, OH 44718-3615 (US)

(73) Assignee: **PARADOX DESIGN SERVICES INC.**, Barrie (CA)

(21) Appl. No.: **11/244,895**

(22) Filed: **Oct. 6, 2005**

Related U.S. Application Data

(60) Provisional application No. 60/616,386, filed on Oct. 6, 2004.

Publication Classification

(51) **Int. Cl.**
A42B 3/00 (2006.01)

(52) **U.S. Cl.** **2/411**; 2/412

(57) **ABSTRACT**

A shock absorbing structure comprising a foam base defining a plurality of recesses, each of the recesses receiving shock absorbing inserts therein. Each insert includes a generally planar surface made of a foam layer and a flexible plastic layer and including a plurality of upstanding, hollow support members extending therefrom. The support members are made of flexible plastic material and have a plurality of openings therein which define air passages within the shock absorbing structure to allow air to flow therethrough. The shock absorbing structure may be used in helmets, shin pads, kneepads, elbow pads, shoulder pads, chest protectors, gloves, pants and footwear.

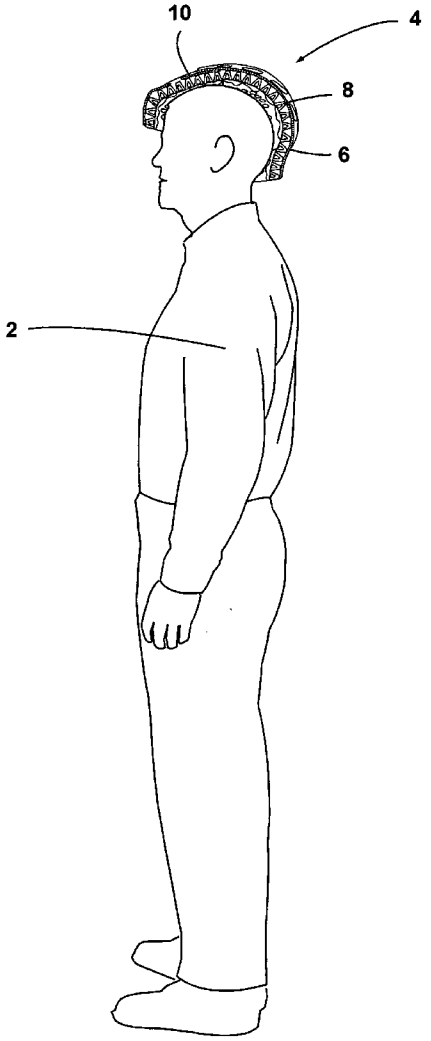

Fig 1

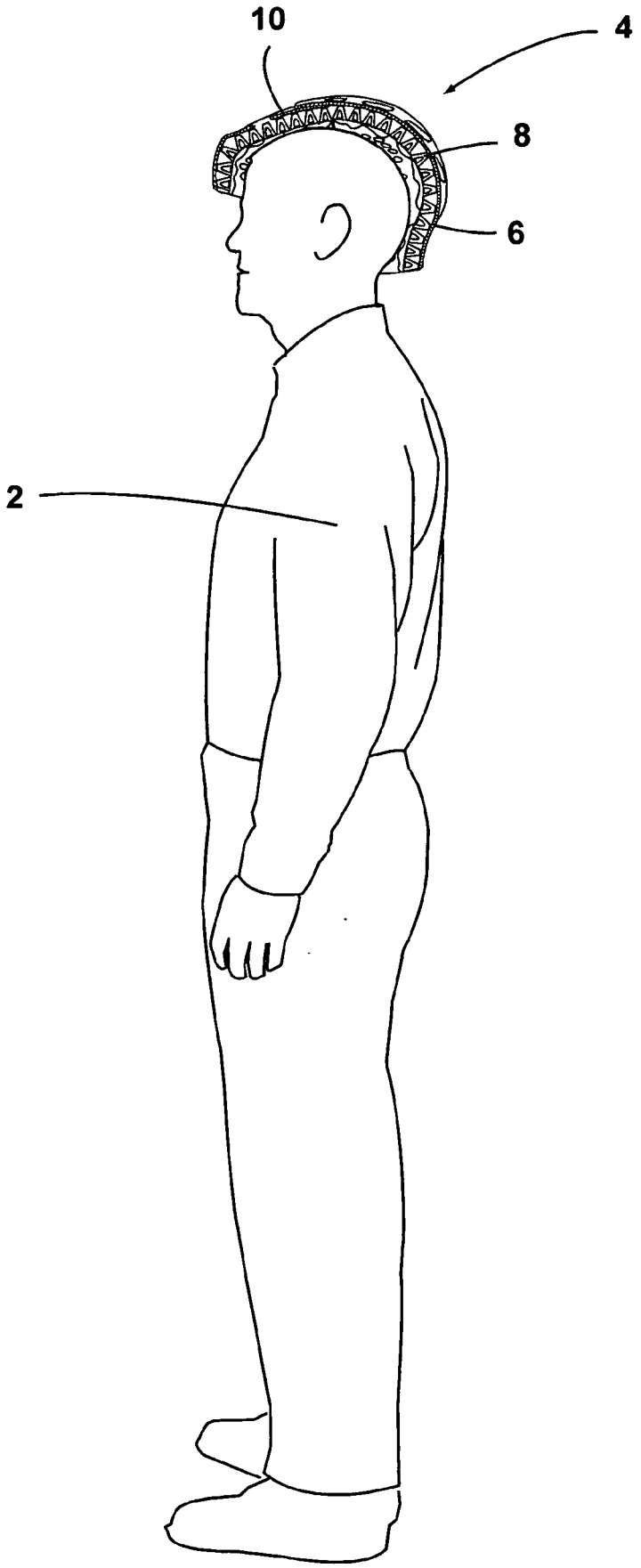

Fig 2

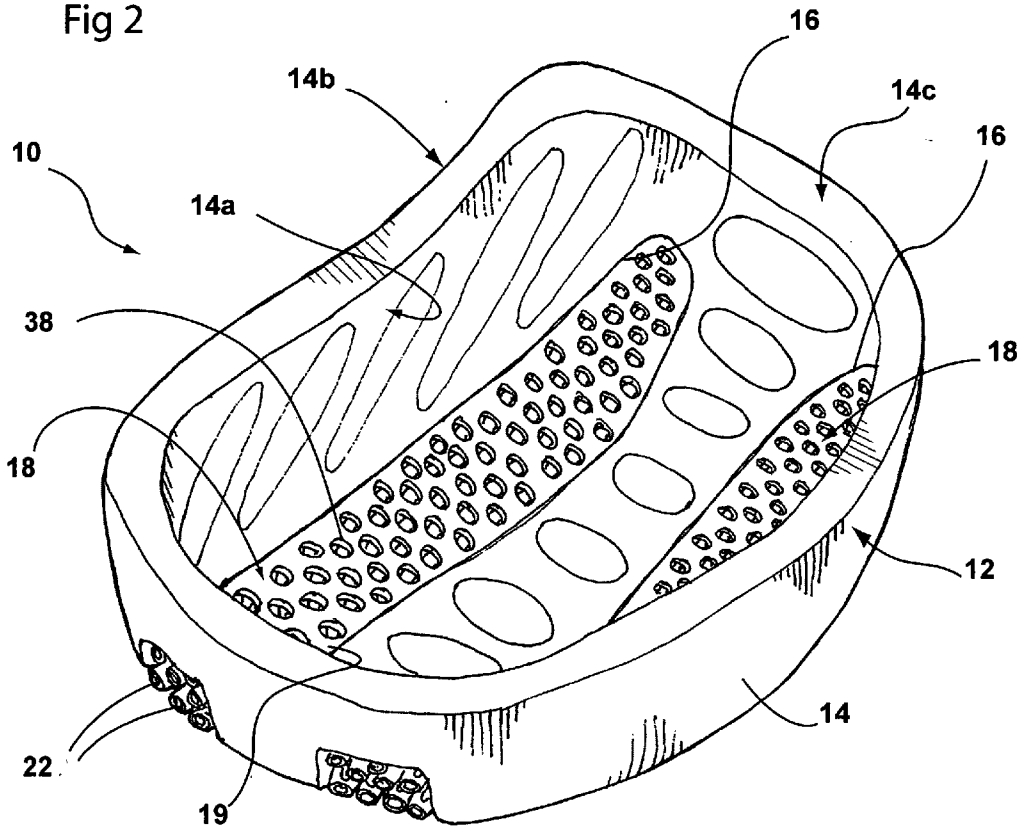

Fig 3

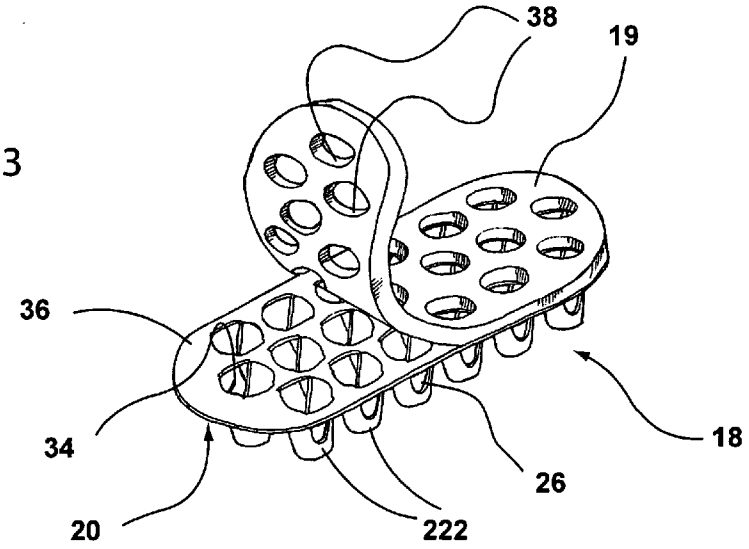

Fig 4

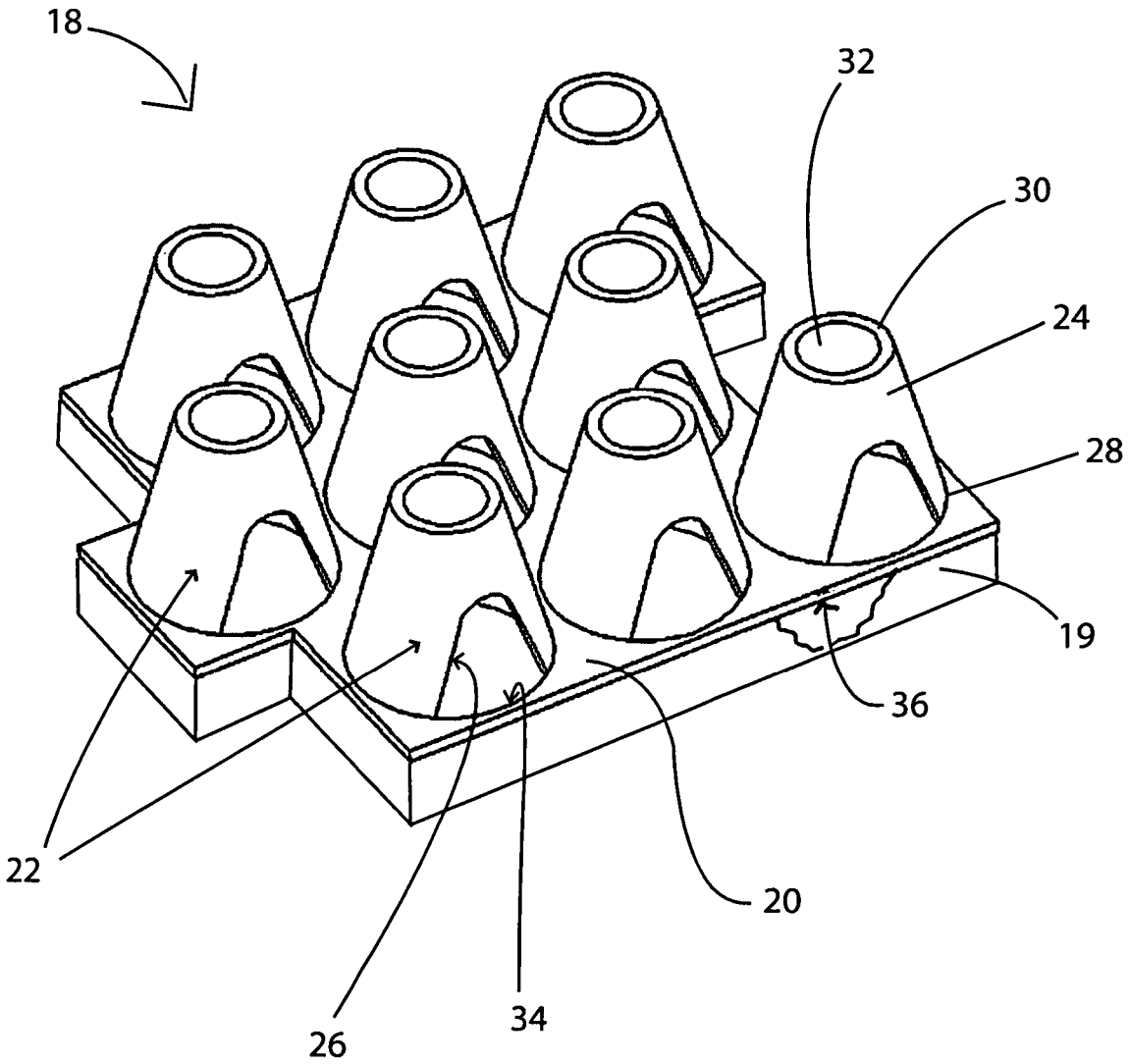

Fig 5

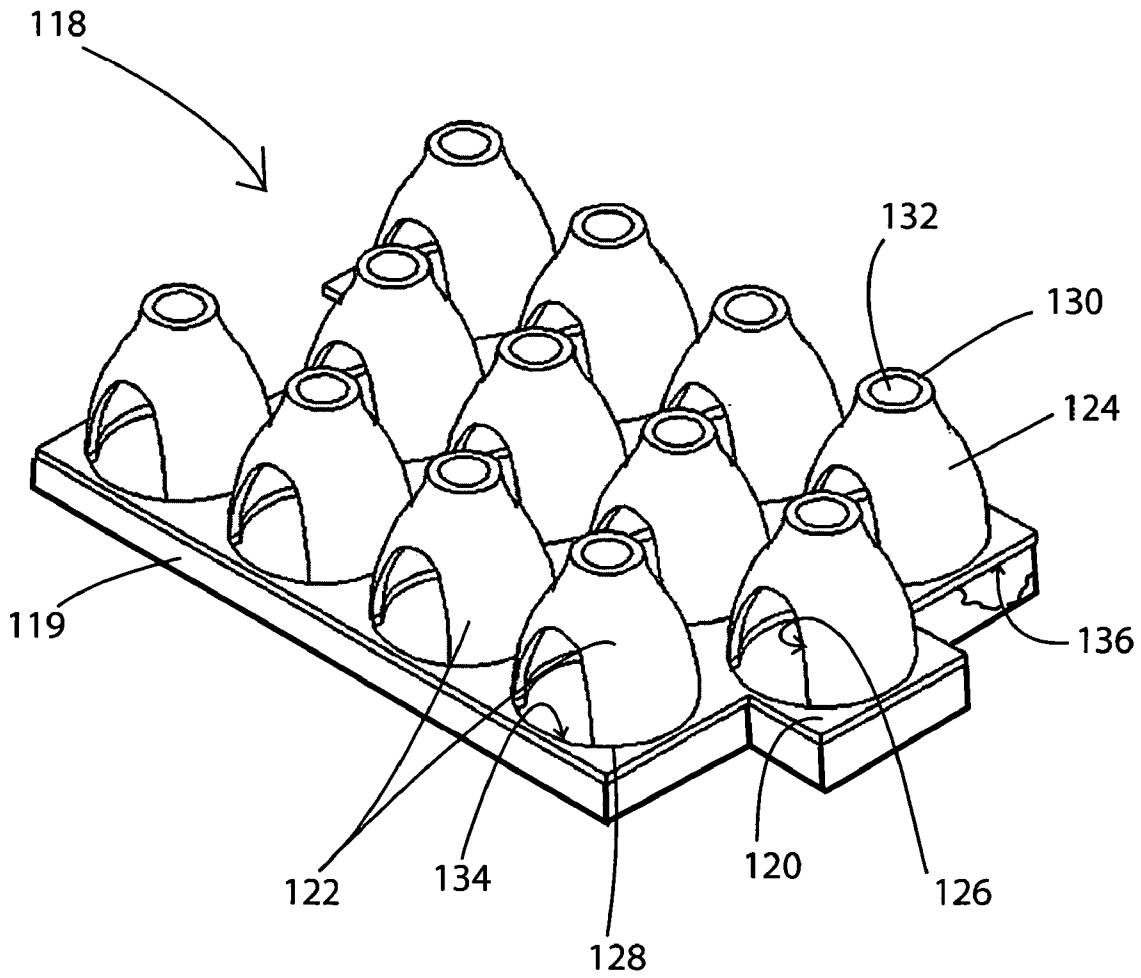

Fig 6

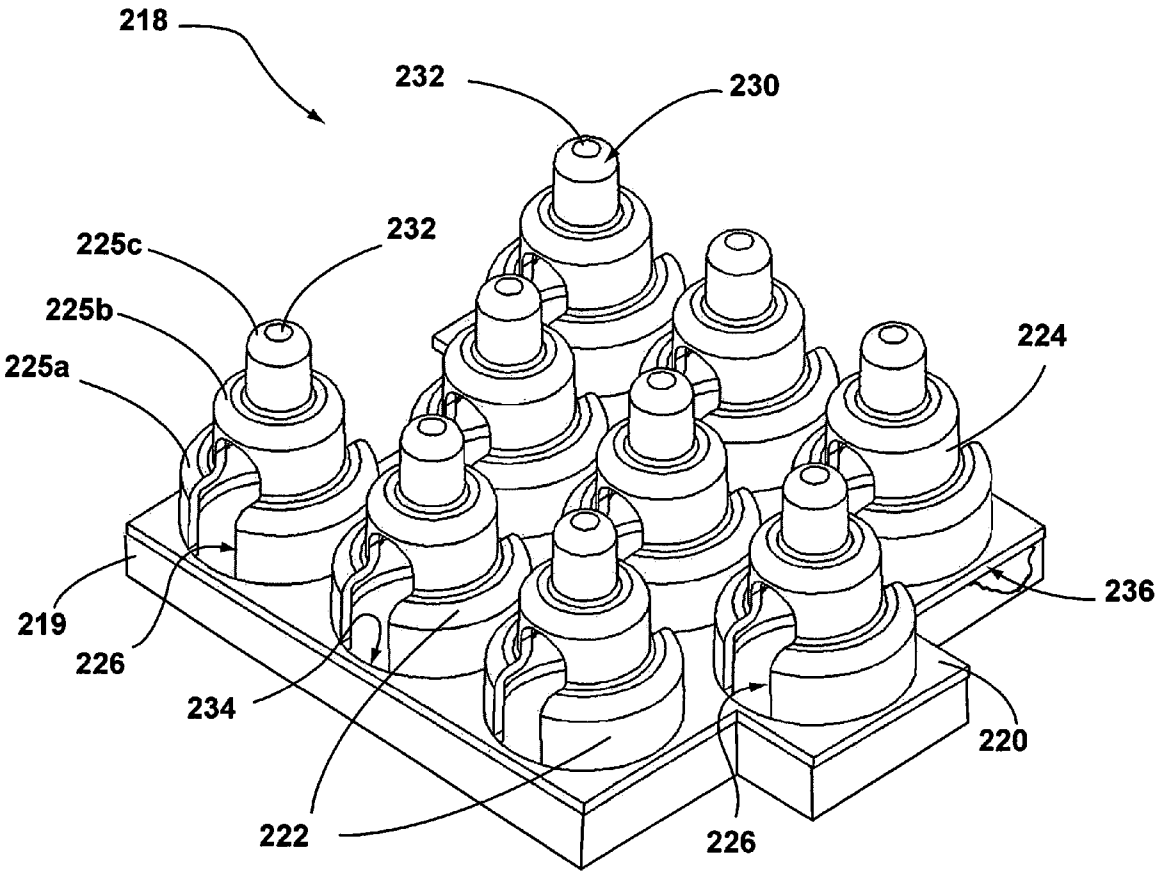

Fig 7

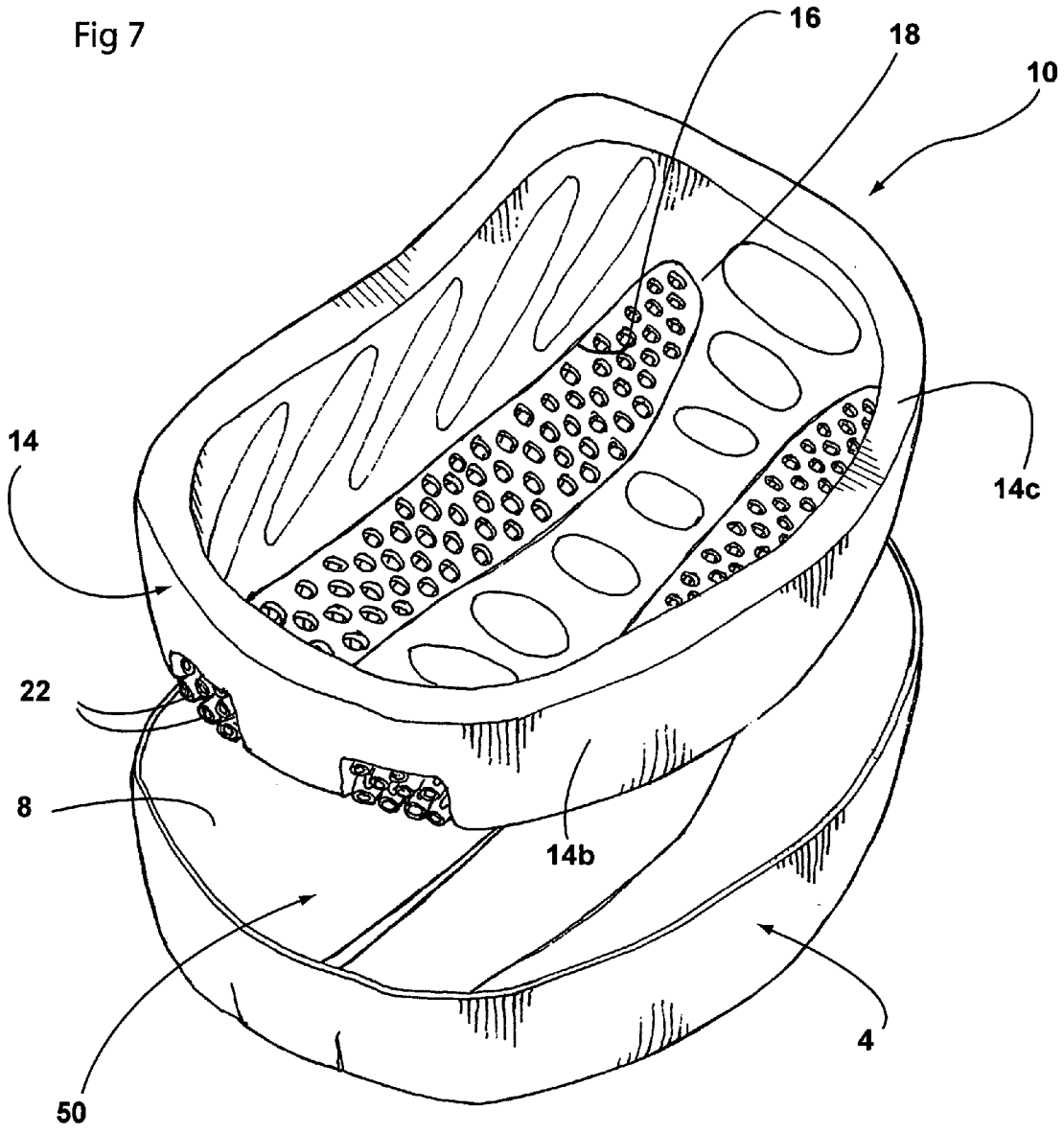

Fig 8

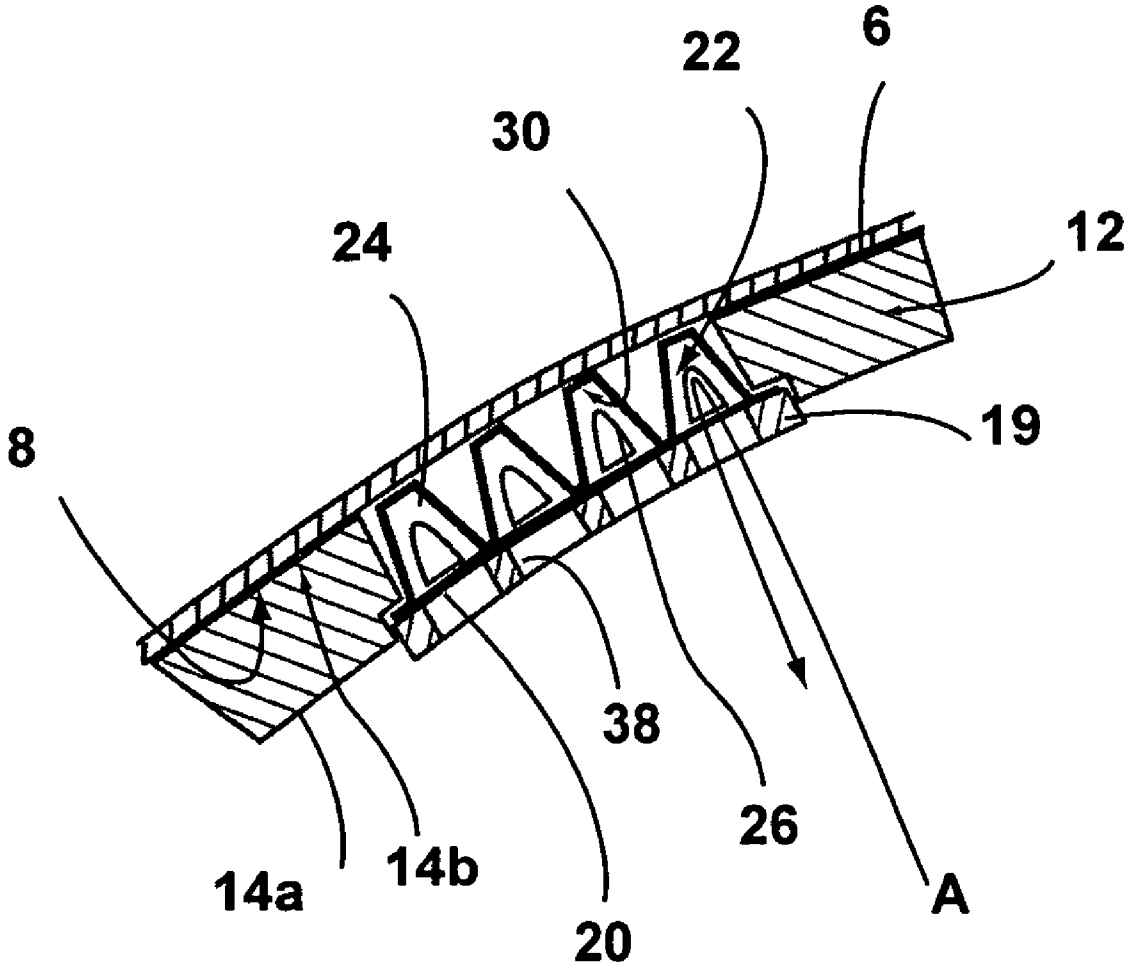

SHOCK ABSORBING AND COOLING STRUCTURE

CROSS REFERENCE TO RELATED APPLICATIONS

[0001] This is a standard utility application claiming priority from U.S. Provisional Application Ser. No. 60/616,386, filed Oct. 6, 2004, the entire specification of which is incorporated herein by reference.

BACKGROUND OF THE INVENTION

[0002] 1. Technical Field

[0003] The present invention relates to a shock absorbing structure. More particularly, the present invention relates to a shock absorber having a plurality of upstanding, hollow support members made of flexible plastic material. Specifically, the invention relates to a shock absorber that is formed into an insert and is then received within a recess formed in a base structure.

[0004] 2. Background Information

[0005] Helmets and other protective equipment typically use foam for impact absorption, specifically, expanded polystyrene (EPS), polyethylene (EPP) or thermoplastic blown foam. These foams do not allow heat to dissipate from the head or body. Heat stress has become a major detriment to exercise performance in athletes, industrial workers and military personnel, often leading to severe heat stroke causing death. Some work has been done with plastic structures for impact absorption with limited success because of increased weight, increased thickness or high manufacturing costs.

[0006] The prior art discloses various structures used to absorb impacts. For example, U.S. Pat. No. 6,029,962 discloses an impact absorber that has pairs of semi-hemispherical indentations used as the impact absorber. U.S. Pat. No. 4,586,200 discloses a protective helmet that has inflatable air pockets, while U.S. Pat. No. 6,536,052 shows various shapes for an impact-absorbing layer that is made of textile.

[0007] U.S. Pat. No. 4,724,549 discloses a structure with air cells and passages between the air cells to allow air to flow between the liner and the head of the wearer. This patent contemplates having air flow within the protective layer.

[0008] There, therefore, remains a need to provide a shock absorbing structure that is lighter in weight than shock absorbing foam and that allows for air circulation within the structure for cooling purposes.

BRIEF SUMMARY OF THE INVENTION

[0009] The present invention provides a shock absorbing structure comprising: a base manufactured from one of an expanded polystyrene or polypropylene foam, with the base having at least one recess formed therein and including an insert that is received within the recess. The insert includes a planar surface made of a flexible plastic material; a plurality of upstanding, hollow support members extending from the planar surface, the support members made of flexible plastic material; and at least one opening in each of the support members defining an air passage within the shock absorbing structure to allow air to flow through the support members. The insert allows heat to dissipate through the base while still providing impact absorption.

[0010] According to another aspect of the invention there is provided an accessory for providing protection to a part of the human body, the accessory comprising: a rigid outer protective shell defining an interior surface; a foam base formed in the shape of the interior surface of the accessory and defining at least one recess therein; and at least one insert made from a shock absorbing material received within the recess of the base, which in turn is received proximate an interior surface of the protective shell.

BRIEF DESCRIPTION OF THE SEVERAL VIEWS OF THE DRAWINGS

[0011] Preferred embodiments of the invention, illustrative of the best modes in which Applicant contemplates applying the principles, are set forth in the following description and are shown in the drawings and are particularly and distinctly pointed out and set forth in the appended claims.

[0012] **FIG. 1** is a side elevational view of a user wearing a helmet which incorporates the shock absorbing structure of the present invention, with the helmet being shown in cross-section;

[0013] **FIG. 2** is a perspective view of the shock absorbing structure of the present invention;

[0014] **FIG. 3** is a perspective view of an insert that is received within a recess of the shock absorbing structure;

[0015] **FIG. 4** is a perspective view of a first embodiment of the shock absorber material used in the insert of the present invention;

[0016] **FIG. 5** is a perspective view of a second embodiment of the shock absorber material used in the insert of the present invention;

[0017] **FIG. 6** is a perspective view of a third embodiment of the shock absorber material used in the insert of the present invention;

[0018] **FIG. 7** is a perspective view of the shock absorbing structure of the present invention molded to the shape of a helmet and being inserted therein; and

[0019] **FIG. 8** is a partial cross-sectional side view through the shock absorbing structure when placed inside a helmet and showing the airflow therethrough.

[0020] Similar numbers refer to similar parts throughout the specification.

DETAILED DESCRIPTION OF THE INVENTION

[0021] Referring to **FIG. 1** there is showing a person **2** wearing a helmet **4** which has a hard, impact-resistant outer shell **6** and mounted to the interior surface **8** of shell **6** is a shock absorbing structure in accordance with the present invention, and generally indicated at **10**. Helmet **4** typically is retained on the person's head by way of a chin strap (not shown).

[0022] **FIG. 2** shows shock absorbing structure **10** of the present invention in greater detail. Shock absorbing structure **10** comprises a base **12** molded from one of an

expanded polystyrene foam and an expanded polypropylene foam. Base **12** is shaped and sized to be complementary to the interior surface **8** of helmet **4**. Base **12** includes peripheral outer wall **14** having an interior surface **14***a* and an exterior surface **14***b*. One or more recesses **16** are formed in peripheral wall **14** and may extend from the interior surface **14***a* through to the exterior surface **14***b*. A shock absorber insert **18** is received in each of the recesses **16**. Insert **18** is complementary sized and shaped to be tightly received within recess **16**. Insert **18** can be retained in recess **16** by friction, by an adhesive or by an overlapping portion (not shown) of base **12**.

[**0023**] In accordance with one of the main features of the present invention, insert **18** includes a foam member **19** onto which generally flat or planar surface **20** is adhesively connected. Foam member **19** is manufactured from a softer foam material than base **12** for additional comfort. Disposed on the planar surface **20** is a plurality of upstanding, hollow support members **22** extending from the planar surface **20**. A suitable material for planar surface **20** and sidewalls **24** is a thermoplastic polymer like polyethylene. As such, the planar surface **20** and support members **22** are able to flex when a force is applied to them. Support members **22** include sidewalls **24** that are preferably made of the same flexible plastic material as the planar surface **20**, and are integral with the planar surface **20**.

[**0024**] Each of the support members **22** includes at least one opening **26**, formed in sidewall **24**, and that defines an air passage within the insert **18** to allow air to flow through the support member **22**.

[**0025**] Preferably, the support members **22** have a shape that is generally frustoconical with the base **28** of the cone disposed on the planar surface **20**, and the smaller end **30** of the cone being away from the planar surface **20**. A second opening **32** is preferably located in the smaller end **30**

[**0026**] At the base **28** of each support member **22** is a surface opening **34** in the planar surface **20** that allows air to flow into the hollow support members **22** from the underside **36** of the planar surface **20**. Surface opening **34** is generally positioned within support members **22**. Foam member **19** includes openings **38** which align with surface openings **34** in planar surface **20**.

[**0027**] **FIG. 5** illustrates a second embodiment of the insert in accordance with the present invention, and being generally indicated at **118**. Insert **118** comprises a foam member **119** and generally planar surface **120** adhesively connected together. Disposed on the planar surface **120** is a plurality of upstanding, hollow support members **122** extending outwardly from the planar surface **120**. Foam member **119** is manufactured from the same material as the base **12**. The planar surface **120** and convex sidewalls **124** are made of a suitable flexible plastic material such as a thermoplastic polymer like polyethylene. As such, the planar surface **120** and support members **122** are able to flex when a force is applied to them.

[**0028**] Support members **122** include sidewalls **124** that are preferably made of the same flexible plastic material as the planar surface **120**, and are integral with the planar surface **120**. Each of the support members **122** includes at least one opening **126** that define air passages within the insert **118** to allow air to flow through the support members **122**.

[**0029**] Preferably, the support members **122** have a shape that is generally frustoconical with the sidewalls **124** being of a convex shape. The base **128** of the cone is disposed on the planar surface **120**, and the smaller end **130** of the cone being away from the planar surface **120**. A second opening **132** is preferably located in the smaller end **130**. However, support member **122** may have a convex shape without departing from the spirit of the present invention.

[**0030**] At the base **128** of the support members **122** is a surface opening **134** in the planar surface **120** that allows air to flow into the hollow support members **122** from the underside **136** of the planar surface **120**. Foam member **119** also includes openings (not shown) which align with surface openings **134** to allow air to flow therethrough.

[**0031**] **FIG. 6** illustrates a third embodiment of the insert in accordance with the present invention and generally indicated at **218**. Insert **218** comprises a foam member **219** and a generally planar surface **220** that are adhesively connected together. As before, foam member **219** is manufactured from a softer foam material than base **12**. Disposed on the planar surface **220** is a plurality of upstanding, hollow support members **222** extending outwardly from the planar surface **220**. The planar surface **220** are made of a suitable flexible plastic material such as a thermoplastic polymer like polyethylene. As such, the planar surface **220** and support members **222** are able to flex when a force is applied to them.

[**0032**] Support members **222** include sidewalls **224** that are preferably made of the same flexible plastic material as the planar surface **220**, and are integral with the planar surface **220**. Each of the support members **222** includes at least one opening **226** that define air passages within the insert **218** to allow air to flow through the support members **222**.

[**0033**] Preferably, the support members **222** have a shape that is generally frustoconical. Sidewalls **224** of insert **218** preferably are made of one or more tiers **225***a*, **225***b* and **225***c* that are of progressively smaller diameter. The base **228** of the cone is disposed on the planar surface **220**, and the smaller end **230** of the cone being away from the planar surface **220**. A second opening **232** is preferably located in the smaller end **230**. However, support member **222** may have a convex shape without departing from the spirit of the present invention.

[**0034**] At the base **228** of the support members **222** is a surface opening **234** in the planar surface **220** that allows air to flow into the hollow support members **222** from the underside **236** of the planar surface **220**. Foam member **219** also includes openings (not shown) that align with surface openings **234** to allow air to flow through insert **218**.

[**0035**] The use of the preferred embodiments of the present invention is described in relation to helmet **4** is illustrated in **FIGS. 7&8**. Helmet **4** is a typical accessory used for providing protection to a part of the human body, namely the head. Helmet **4** comprises a rigid outer protective shell **6** defining an interior surface **8**. Shock absorbing structure **10** is secured to the interior surface **8** of the protective shell **6**. Preferably, there is a removable porous second layer (not shown in **FIG. 7**) fitted on the interior surface **14***a* of the structure **10**.

[**0036**] Shock absorbing structure **10** preferably includes one of the inserts **18**, **118** and **218** illustrated in **FIGS. 4, 5**

&6 and described above. The following description will be made with reference to insert **18** only, but applies equally to inserts **118** and **218**. An insert **18** is fitted into each recess **16** in base **12**. The thickness of insert **18** preferably is substantially the same as the thickness of peripheral wall **14** of base **12**, so that the smaller ends **30** of support members **22** lie substantially coplanar with the exterior surface **14***b* of base **12** (**FIG. 8**). Base **12** is positioned within a cavity **50** of helmet **4** in a manner that preferably brings exterior surface **14***b* into contact with interior surface **8** of helmet. An adhesive may be applied to secure base **12** to interior surface **8** or base **12** may simply be friction fit within helmet **4**. Spacers (not shown) may be positioned between exterior surface **14***b* of base **12** and interior surface **8** of helmet **4** so as to allow for air flow therebetween. While recess **16** and insert **18** are shown as lying inwardly from the rim **14***c* of outer wall **14**, it will be understood that the recess **16** can extend to the rim **14***c*.

[**0037**] As seen in **FIG. 8**, air may flow, as indicated by arrow "A", flow into opening **38** in foam member **19**, through surface opening (not shown) in planar member **20** and into the interior of support member **22**. Air then flows out of the interior of support member **22** through opening **26** in the side wall **24** thereof. Holes (not shown) may also be provided in shell **6** of helmet to allow air to escape therefrom

[**0038**] As should be apparent from the above description, the present invention may be utilized in other protective equipment such as shin pads, knee pads, elbow pad, shoulder pads and chest protectors for example. In these other devices, the foam base **12** is molded to be complementary to the shape of the area of the protective device that needs to absorb shocks. The base is then formed with one or more recesses therein and the shock absorbing and cooling inserts are then fitted into the recesses

[**0039**] In summary, the present invention is a product used to replace foams or other impact absorption devices currently used in various applications such as helmets (sports or otherwise), protective padding, etc. The shock absorbing structure of the present invention allows air to flow freely through it, thus assisting in keeping the wearer of the protective device cool. With its open structure, warm air can be dissipated through the structure and directed away from the body. The shock absorbing structure of the present invention can be manufactured at or less than the same weight, thickness and cost of existing shock absorbing structures made of expanded polystyrene (EPS) or expanded polypropylene (EPP).

[**0040**] In the foregoing description, certain terms have been used for brevity, clearness, and understanding. No unnecessary limitations are to be implied therefrom beyond the requirement of the prior art because such terms are used for descriptive purposes and are intended to be broadly construed.

[**0041**] Moreover, the description and illustration of the invention is an example and the invention is not limited to the exact details shown or described.

1. A shock absorbing structure comprising:

a base;

at least one recess formed in the base;

at least one insert received in the recess, the insert being complementary sized and shaped to the recess; and wherein the insert comprises:

a support surface made of a flexible material;

a plurality of upstanding, hollow support members extending from the support surface, the support members made of flexible material; with

each support member having a sidewall, the sidewall defining at least one opening therein and thereby forming an air passage within the insert to allow air to flow therethrough.

2. The shock absorbing structure of claim 1 wherein the base includes a peripheral wall having an interior and exterior surface; and the recess extends to the exterior surface of the peripheral wall.

3. The shock absorbing structure of claim 1, in which the base is manufactured from one of an expanded polystyrene foam and an expanded polypropylene foam.

4. The shock absorbing structure of claim 1, wherein the support surface and the support members of the insert are integrally molded from a flexible plastic material.

5. The shock absorbing structure of claim 1, wherein the insert is retained in the base by one of a friction fit, an adhesive or an overlapping portion from the base.

6. The shock absorbing structure of claim 1, wherein the base is molded to conform to a shape of a helmet.

7. The shock absorbing structure of claim 6, wherein the base is adapted to be received within a helmet and the base substantially extends across the entire interior surface of the helmet.

8. The shock absorbing structure of claim 7, wherein the base includes a plurality of recesses formed therein, and wherein the recesses extend to an outer rim of the base; and the shock absorbing structure includes a plurality of inserts, each of which is complementary sized and shaped to be received into one of said recesses; whereby the inserts extend to the rim of the base.

9. The shock absorbing structure of claim 1, in which the support surface of the insert is generally planar.

10. The shock absorbing structure of claim 9, in which the support surface comprises a layer of foam and a planar surface.

11. The shock absorbing structure of claim 1, wherein the support members have a shape that is a generally one of frustoconical with straight sidewalls; frustoconical with concave sidewalls; frustoconical with convex sidewalls and frustoconical with tiered sidewalls.

12. The shock absorbing structure of claim 11, wherein the support surface includes surface openings that allow air to flow into the hollow support members.

13. The shock absorbing structure of claim 12, wherein each support member includes an opening in at least one of an end distal from the support surface, and the sidewalls of the support member.

14. The shock absorbing structure of claim 13, wherein the support members flex when a force is applied to the support members.

15. The shock absorbing structure of claim 4, wherein the flexible plastic material is a thermoplastic polymer.

16. The shock absorbing structure of claim 15, wherein the thermoplastic polymer is polyethylene.

17. An accessory for providing protection to a part of the human body, the accessory comprising:

a rigid outer protective shell defining an interior surface;

a base molded to conform to the interior surface of the shell;

at least one recess formed in the base;

at least one shock absorbing insert received in the recess; and wherein the insert comprises:

a support surface made of a foam layer and a flexible layer;

a plurality of upstanding, hollow support members extending from the flexible layer of the support surface, the support members being made of flexible material; and

the support members each having a sidewall and defining at least one opening therein, thereby providing an air passage within the insert to allow air to flow therethrough.

18. The accessory as defined in claim 17, in which the base is manufactured from one of an expanded polystyrene foam and an expanded polypropylene foam.

19. The accessory of claim 18, wherein the flexible layer and the support members of the insert are integrally molded from a flexible plastic material.

20. The accessory of claim 19, wherein each support member has a shape that is generally frustoconical and defines a plurality of openings therein and the support surface includes a plurality of openings that allow air to flow into the hollow support members

21. The accessory of claim 20, wherein the accessory is selected from the group consisting of helmets, shin pads, knee pads, elbow pads, shoulder pads, chest protectors, gloves, pants and footwear.

22. The accessory of claim 21, wherein the accessory is a helmet and the recess in the base extends from a first part of a rim of the helmet through to a second part of the rim of the helmet; and the insert is retained within the recess and extends from the first part of the rim through to the second part of the rim.

* * * * *