Dec. 12, 1933. C. L. PAULUS ET AL 1,939,517

COMPENSATING GUN SIGHT

Filed Jan. 16, 1932 3 Sheets-Sheet 1

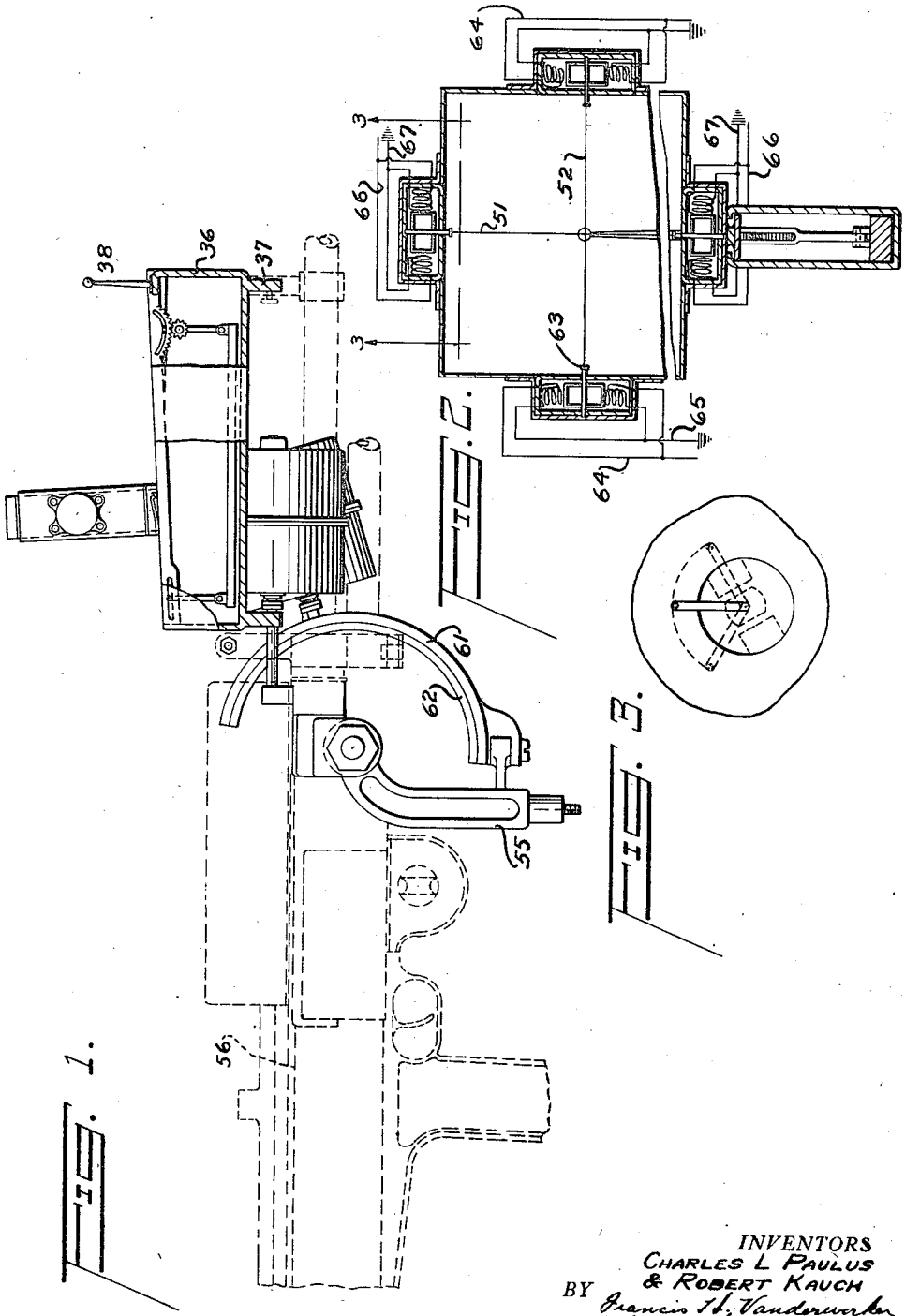

FIG. 2.

FIG. 3.

FIG. 1.

INVENTORS
CHARLES L PAULUS
& ROBERT KAUCH
BY Francis H. Vandervoort
and Wade Hoopes
ATTORNEYS

Dec. 12, 1933. C. L. PAULUS ET AL 1,939,517

COMPENSATING GUN SIGHT

Filed Jan. 16, 1932 3 Sheets-Sheet 2

FIG. 4.

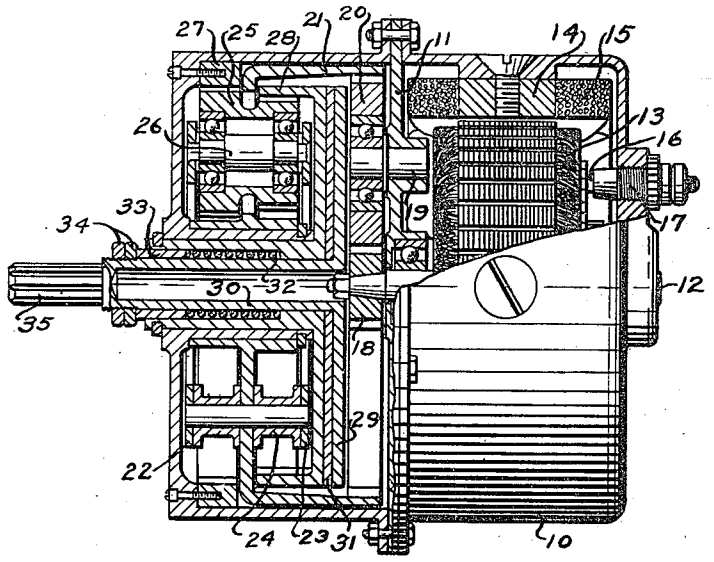

FIG. 5.

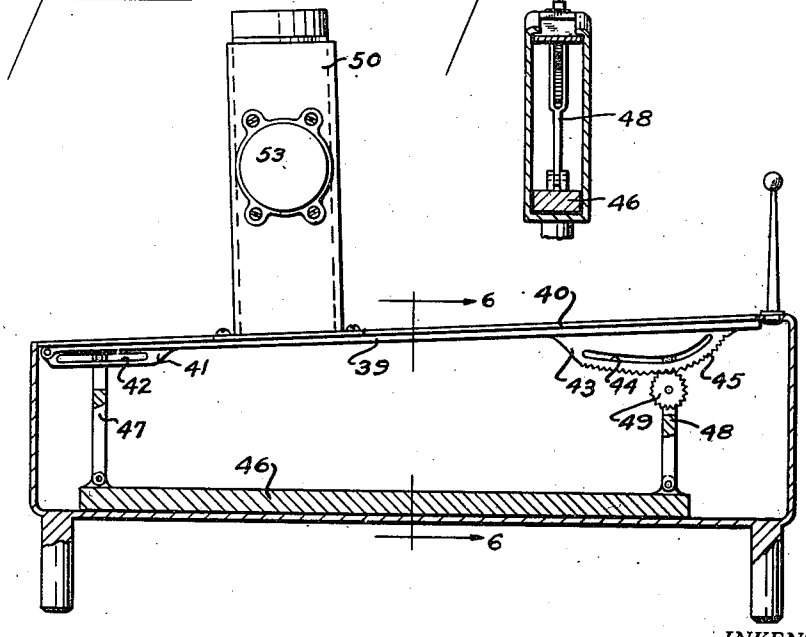

FIG. 6.

INVENTORS
CHARLES L PAULUS
& ROBERT KAUCH
BY Francis H. Vanderwaker
and Wade Hont
ATTORNEYS

Dec. 12, 1933. C. L. PAULUS ET AL 1,939,517

COMPENSATING GUN SIGHT

Filed Jan. 16, 1932 3 Sheets-Sheet 3

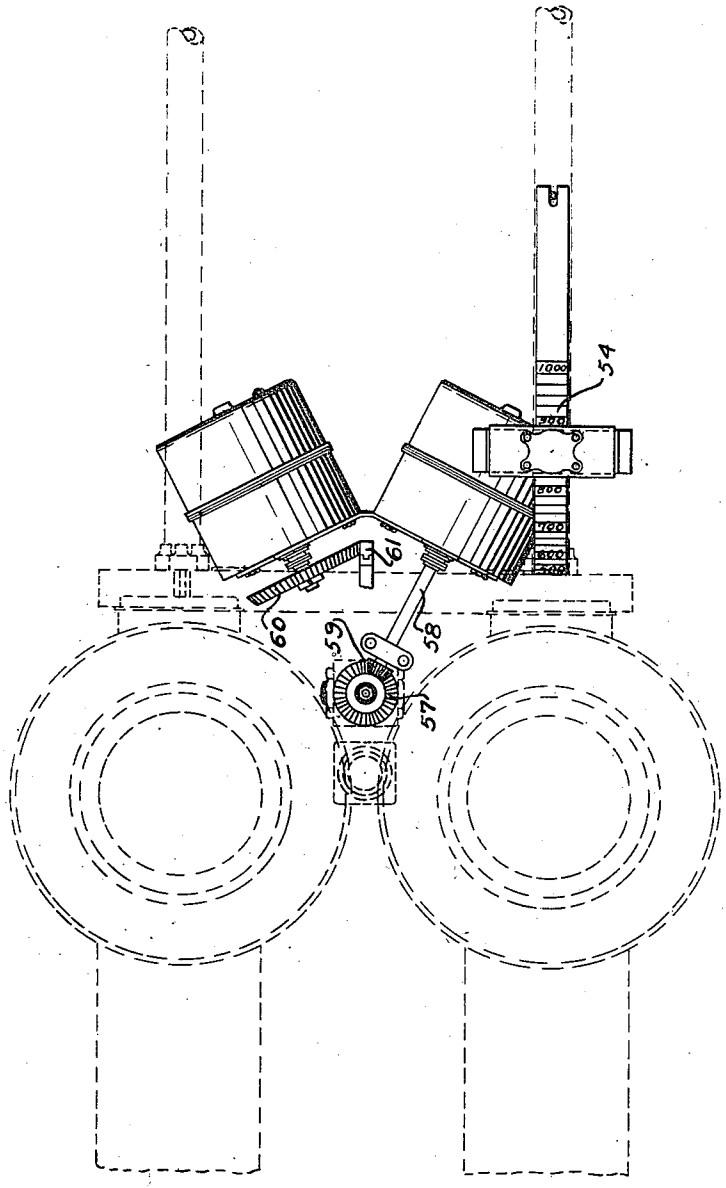

FIG. 7.

INVENTORS
CHARLES L. PAULUS
& ROBERT KAUCH
BY Francis H. Vanderwerker
and Wade Hoyt ATTORNEYS

Patented Dec. 12, 1933 1,939,517

UNITED STATES PATENT OFFICE

1,939,517

COMPENSATING GUN SIGHT

Charles L. Paulus, Dayton, Ohio, and Robert Kauch, Montgomery, Ala.

Application January 16, 1932. Serial No. 587,124

16 Claims. (Cl. 33—49)

This invention relates to an automatic compensating gun sight particularly adapted to guns mounted on moving vehicles and firing into moving targets.

The principal object of our invention is to provide a gun sight that will give the proper lead on a target regardless of the relative speeds and direction of movements of the gun platform and target.

A further object of this invention is to provide a compensating gun sight that gives a correction for bullet speeds for all positions of gun fire from vertically upward to vertically downward.

A still further object of our invention is to provide a gun sight that will provide a proper lead on a target even when the movement of the gun to follow the target is very slow.

A still further object of our invention is to provide a compensating gun sight for mounted guns that does not interfere with the rapid movement of the gun from one target to another.

A still further object of our invention is to provide a compensating gun sight that is economical in manufacture and durable in use.

These and other objects will be apparent to those skilled in the art.

Our invention consists in the construction, arrangement and combination of the various parts of the device, whereby the objects contemplated are attained as hereinafter more fully set forth, pointed out in our claims and illustrated in the accompanying drawings in which:—

Fig. 1 is a side view of our complete invention installed and ready for use with sections cut away to more fully illustrate its construction.

Fig. 2 is an enlarged rear sectional view of the sighting portion of the invention and is taken on line 2—2 of Fig. 1.

Fig. 3 is an enlarged view of one of the cross-hair raising and lowering arms of the electrometer.

Fig. 4 is a side sectional view of one of the generators and operating mechanism.

Fig. 5 is a side view of the sighting instrument with parts cut away to more fully illustrate its construction.

Fig. 6 is a cross-sectional view of the pendulum portion and housing and is taken on line 6—6 of Fig. 5.

Fig. 7 is a top plan view of our device with dotted line showing the relations of the guns.

In aircraft weapons automatic sights are imperative for compensating not only for the relative speeds of the target and gun, but for the projectory of the bullets fired at various angles to the horizontal. Our gun sight is so designed as to automatically compensate for all shooting conditions of whatever nature experienced in aerial combat.

In order to facilitate the description and understanding of the entire apparatus, the description will be subdivided into units, namely, the generator and reduction gear, the sighting instrument proper and the installation of the guns.

Referring primarily to the generator and in order to explain the action of this part of the apparatus, let us consider the construction shown in Fig. 4. We have used the numeral 10 to generally designate the gear housing. The numeral 11 designates a webbing dividing the housing 10 in two compartments. Rotatably mounted in the rear compartment is the armature shaft 12 carrying the armature 13. This armature 13 is rotated within the usual field pole pieces 14 which are secured inside the housing 10. These field pole pieces are energized by the use of the usual field windings 15. The electric energy of the generator is collected by the use of a brush 16 carried by the brush holders 17. This brush engages the armature commutator 14 in the well known manner. The numeral 18 designates a spur gear rigidly secured on the forward end of the armature shaft 12 and located inside the forward compartment of the housing 10. The numeral 19 designates a fixedly mounted shaft in the webbing 11 and at one side of the armature shaft 12 as shown in Fig. 4. Rotatably mounted on this shaft 19 is a comparably large intermediate spur gear 20 in engagement with the relatively smaller spur gear 18. This intermediate gear meshes with the internal gear 21 which is of a cup shape and carries the rings 22 and 23 mounted by use of the spacers 24. These spacers support the planets 25 journaled on the bearings 26. The larger planet gear engages the internal gear 27 which is rigidly fixed to the housing 10 by any suitable means. The smaller planet gear engages with the internal drive gear 28 which is journaled within the diameter of the gear housing as shown in Fig. 4. The numeral 29 designates a clutch disc mounted on the inner end of the shaft 30. This clutch plate frictionally engages a fabricoid or other abrasive material disc 31 which in turn actuates against the base of the internal drive gear 28. A yielding pressure is maintained on the base of the clutch by virtue of the action of the coil spring 32 which has one end engaging that member as shown in Fig. 4 and its other end engaging a collar 33 which in turn is backed by the locknuts 34 threaded on

to the shaft 30. By adjusting these locknuts 34 the tension of the coil spring 32 may be adjustably obtained. The numeral 35 designates a splined end portion on the forward end of the shaft 30 to facilitate the mounting of the instrument and this part of the mechanism. From the foregoing it will readily be seen that by only increasing or decreasing the size and character of the reduction gears, a reduction of practically any magnitude can be obtained.

We will now describe the sighting instrument proper and attention is directed to Figs. 1, 2, 3, 5 and 6. We have used the numeral 36 to designate the elongated base housing portion of the sighting instrument open at its top. This housing is designed to be secured to one of the rifle barrels by use of common detachable adapters designated by the numeral 37. By these usual and well known adapters the complete sighting instrument may be quickly attached or detached from the guns. As this base housing is designed to have no relative movement to the gun or guns to be sighted we have positioned the usual bead sight 38 rigidly on the top forward end portion of the base 36. The numeral 39 designates an elongated base bar inside the base housing 36 and pivoted at its rear end to the rear end top of the housing 36 by suitable means such as shown in Fig. 5. This elongated base bar incloses the top of the base housing 36 but is prevented from swinging movement to a position outside of that member but having its upper surface capable of engaging marginal inwardly extending flanges 40 at the top of the housing 36. The numeral 41 designates a downwardly extending flange on the under side of the base bar 39 and positioned near the rear end of that member. The numeral 42 designates a horizontal slot in the member 41. The numeral 43 designates a second downwardly extending flange on the under side of the base bar 39 but positioned near the forward end of that bar as shown in Fig. 5. This last mentioned flange has a slot 44 which extends in the logarithmic curve which will be later explained. On the under side of this member 43 are ratchet teeth 45 which extend in a line parallel with the slot 44. The numeral 46 designates a pendulum weight inside the base housing 36. The numeral 47 designates an arm having its lower end secured to the member 46 and its other end capable of operatively sliding in the slot 42. The numeral 48 designates a similar arm also secured to the member 46 but capable of operatively following and sliding in the slot 44. The numeral 49 designates a small spur gear pivotally secured to the arm 48 and engaging the teeth 45. The numeral 50 designates the actual sighting instrument housing which is longitudinally slidably secured to the top of the base bar 39. When looking through this housing or frame we observe the vertical cross hair 51, the horizontal cross hair 52, and the rigid front bead sight 38. These two cross hairs are adjustably and automatically positioned by electrometers or galvanometers generally designated by the numeral 53. These electrometers capable of measuring the changes in electric potential are of conventional type with the exception that the cross hairs 51 and 52 are mounted by the points of the indicating needles as shown in Figs. 2 and 3. A double meter installation is used in the horizontal and vertical plane to average the error and to dampen vibration. The desirable electric connecting or hook-up of these four meters with the two generators used is shown in Fig. 2. The numeral 54 designates a scale below the housing 50 for adjusting the sight for combat at different ranges.

We will now describe the installation of the guns and the sighting mechanism and particular attention is directed to Figs. 1 and 7. The numeral 55 designates a gun mount rigidly secured to a supporting member such as the fuselage of an airplane or the like. The numeral 56 designates one or more guns vertically and horizontally rotatably mounted to the member 55. By this arrangement the gun or guns may be swung in both vertical and horizontal planes. Rigidly secured by any suitable manner with the gun or guns are the two generator and reduction gear units which we have hereinbefore described. The left generator is driven by any vertical movement of the guns and the right generator is actuated by any horizontal movement of the guns. The numeral 57 designates a bevel gear which is fixed against movement to the gun support or yoke. The numeral 58 designates a rotatably mounted shaft having one of its ends embracing the splined end 35 of the shaft 30. Secured to the other end of the shaft 58 is a bevel gear 59 in engagement with the bevel gear 57. By this arrangement of parts, whenever the gun or guns are moved in a horizontal plane, the generator to the right will be rotated. The numeral 60 designates a bevel gear rigidly secured on the shaft 30 of the left positioned generator. This bevel gear 60 is in engagement with the bevel gear segment 61 as shown in Fig. 7. This gear segment 61 is hinged at its lower end to the member 55 and by being in continuous operative contact with the gun yoke by the tongue 62 cut around the internal periphery of the segment it must always swing in a horizontal plane with the gun or guns 56. This last mentioned action I have made possible by the axis of the pivot point of the gear segment being in the same plane with the secured mechanism of the gun and yoke. By observing the drawings it will be noted that the movement of the guns in a vertical plane will cause rotation of the bevel gear 60 which will be transmitted through the reduction gears to the armature of the left positioned generator. Returning to Fig. 2 we have designated the cross hair actuating arms by the numeral 63. The electromagnets 53 which operate the horizontal cross hair 52 have their lead wires 64 making electrical contact with the brushes 17 of the left positioned generator. The lead wires 65 are designed to lead to a suitable ground. The numeral 66 designates the electrical lead wires leading from the two electromagnets that operate the cross hair 51 to the member 17 of the right sided positioned generator. The numeral 67 designates the ground wires of these least two-mentioned electromagnets.

The reduction gears inside the generator housing which we have already described successfully amplify the rotation of the generators by any slight movement of the guns for the successful actuating of the electromagnets. In other words the principle upon which this invention is based is on the fact that the electrical output of a generator is directly proportional to the rate of speed of the armature and that the output of the generator may be caused through use of the conventional type electrometer to position cross hairs used for sighting purposes.

We will now discuss the operation of the invention. By observing Figs. 1 and 7 it will be noted that a certain range setting for combat may be

decided upon by the gunner and the rear sighting housing should so be positioned on the scale 54. The movement of this housing toward the front bead sight elevates the muzzle of the gun to compensate for the fall of the bullet and trajectory at long ranges, and at the same time reduces the length of the distance between the rear and front sight which amplifies the correction made by certain movements of the rear sighting hairs to compensate for the reduction of the speed of the bullet at long ranges. In other words, it is necessary to lead a moving target by a greater distance at long ranges due to the fact that the speed of the bullet has fallen off and its initial velocity has been greatly reduced in all directions. The above accommodation for an approximate range is only true, however, when the firing is being done in approximately a horizontal plane as when the gun is pointed straight upwardly the trajectory instead of being approximately that of a logarithmic curve becomes a straight line and therefore it is essential to eliminate trajectory corrections, with the exception of the reduction of the sight distances mentioned above which compensates for the reduction of the speed of the bullet, and which correction must be increased when the gun is directed straight upwardly. This lack of trajectory is automatically taken care of by action of the pendulum weight 46 which normally rests on the bottom of the housing 36 and capable of sliding movement thereon. Observation of this part of the mechanism will indicate that as this pendulum moves toward the butt of the gun, the elevation of the member 39 is reduced thereby bringing the alignment of the sights closer to the axis of the gun barrel and the sight base. This action is required and takes place whenever the gunner is shooting upwardly approaching that of a vertical line. Should the guns be sighted downwardly the pendulum weight will move towards the forward end of the gun, thereby reducing the elevation of the member 39. In Fig. 5 it will be noted that the slot 44 and teeth 45 are not cut on a true circumference but are in fact in the form of a logarithmic curve. The true periphery of this curve is determined by the sighting ranges in which the sight is to be used. In other words when the sight is to include correction for very long ranges the curve will fall off very rapidly at the tangential ends. Returning to the operation of the speed accommodation of the rear sight, the target is picked up by the gunner and followed by the use of the sight in the well known manner. Should this movement be in a flat horizontal plane the horizontal generator will be actuated and the vertical generator will remain dormant. This means that the horizontal sighting gear controlled by the vertical generator will remain inactive. The vertical sight hair controlled by the horizontal generator will be offset an amount depending upon the angular velocity between the target and the gun platform. This correction is simple in itself and is entirely isolated from the range and trajectory corrections mentioned above. On the other hand if the guns are moved in a vertical plane the horizontal sighting hair will be actuated and positioned accordingly. As the movement of the gun is free the two generators may function independently or simultaneously.

Should the gunner transfer his attention from one target to another and wish to move or jerk the guns from one position to another, it is impractical to allow the high speed mechanism to be connected and operative during this procedure as excessive power would be required to shift the guns from their natural progression and, furthermore, excessive energy would be transmitted to the electrometers using another sighting mechanism. Therefore, in each of the generators a clutch we have already described is provided. These clutches which form an integral part of the gear reduction will transmit power only up to the limited rate of normal operation of the guns and permit slippage above this point so that the guns may be quickly and easily shifted from one position to the other. The force necessary to slip this clutch will depend upon the tension of the coil spring 32.

By making the housing of the generator and reduction gears in two pieces and the bolting of the same together as shown in Fig. 4, the complete mechanism therein may be easily and quickly remove or replaced.

From the foregoing it will be readily appreciated that we have provided a compensating sight for use for both stationary and moving targets being fired upon by guns in motion.

Some changes may be made in the construction of our automatic compensating gun sight without departing from the real spirit and purpose of our invention, and it is our intention to cover by our claims any modifying forms, structure, or use of mechanical equivalents which may be reasonably included in their scope.

We claim:

1. In an automatic compensating gun sight, the combination of a gun mount and gun mounted thereon to permit rotative movement of the gun, a gun sight mounted to move with the gun and embodying movable cross hair members, an electrical means for positioning one of said cross hairs, and an electricity producing means actuated by movement of the gun in electrical communication with said electrical means for positioning the said cross hair.

2. In an automatic compensating gun sight, the combination of a gun mount and gun mounted thereon to permit both vertical and horizontal rotative movement of the gun, a gun sight mounted to move with the gun and embodying movable cross hair members, an electrical means for independently positioning both of said cross hairs and two electrical generators actuated by vertical and horizontal movement of the gun in electrical communication with the two electrical cross hair positioning means, respectively.

3. In an automatic compensating gun sight, the combination of a gun mount and gun mounted thereon to permit both vertical and horizontal rotative movement of the gun, a gun sight mounted to move with the gun and embodying angularly related movable cross hair members, means for shifting said cross hair members embodying electrometers actuated by an electric current, and generators actuated by the various movements of said gun in electrical communication with said electrometers.

4. In an automatic compensating gun sight, the combination of a gun mount and gun mounted thereon to permit of a rotative movement of the gun, a gun sight mounted to move with the gun and embodying movable cross hair members, and apparatus embodying electricity producing mechanism actuated by the gun movement operating to shift the cross hair members to correct for the speed of a moving target.

5. In an automatic compensating gun sight, the combination of a gun mount and gun mounted thereon to permit both vertical and horizon-

tal rotative movement of the gun, a gun sight mounted to move with the gun and embodying movable cross hair members, an electrometer operatively connected to each end of each of the movable cross hair members, a generator actuated by the vertical movement of said gun in electrical communication with two of said electrometers, and a second generator actuated by the horizontal movement of said gun electrically connected to the remaining two electrometers.

6. In an automatic compensating gun sight, the combination of a gun mount and gun mounted thereon to permit both vertical and horizontal rotative movement of the gun, a gun sight mounted to move with the gun and embodying movable cross hair members, an electrometer operatively connected to each end of each of the movable cross hair members, a gear fixed against movement, a generator designed to move with said gun in electrical communication with two of said electrometers, a second gear engaging said first mentioned gear operatively connected to said generator, a third gear positioned at right angles to said first mentioned gear, a second generator designed for movement with said gun in electrical communication with the remaining two said electrometers, and a fourth gear in engagement with said third gear operatively connected to said last mentioned generator.

7. In an automatic compensating gun sight, the combination of a gun mount and gun mounted thereon to permit of rotative movement of the gun, a gun sight mounted to move with the gun and embodying a movable sighting member, an electrometer operatively connected to said movable sighting member, a generator in electrical communication with said electrometer, and progression gears actuated by the movement of said gun in operative contact with said generator.

8. In an automatic compensating gun sight, the combination of a gun mount and gun mounted thereon to permit of rotative movement of the gun, a gun sight mounted to move with the gun and embodying a movable sighting member, an electrometer operatively connected to said movable sighting member, a generator in electrical communication with said electrometer, and a means actuated by the movement of said gun in operative connection with said generator; said means including a clutch.

9. In an automatic compensating gun sight, the combination of a gun mount and gun mounted thereon to permit of rotative movement of the gun, a gun sight mounted to move with the gun and embodying a movable sighting member, an electrometer operatively connected to said movable sighting member, a generator in electrical communication with said electrometer, a means actuated by the movement of said gun in operative connection with said generator; said means including a clutch, and a means for adjustably regulating the normal tension of said clutch against slippage.

10. In an automatic compensating gun sight, the combination of a gun mount and gun mounted thereon to permit of rotative movement of the gun, a gun sight mounted to move with the gun and embodying a movable sighting member, an electrometer operatively connected to said movable sighting member, a generator in electrical communication with said electrometer actuated by the movement of said gun, a front gun sight mounted to move with said gun, and a means for adjustably positioning said first mentioned gun sight relative to said last mentioned gun sight.

11. In an automatic compensating gun sight, the combination of a gun mount and gun mounted thereon to permit vertical movement of the gun, a sighting member rigidly secured to said gun, a movable base member, a gun sight mounted on said movable base member, a pendulum weight below said base member, a means for limiting the movement of said pendulum weight in one direction, flanges secured to said base having slots one of which extends in the logarithmic curve, and arms for operatively connecting said weight to said slots.

12. In an automatic compensating gun sight, the combination of a gun mount and gun mounted thereon to permit vertical movement of the gun, a sighting member rigidly secured to said gun, a movable base member, a gun sight mounted on said movable base member, a pendulum weight below said base member, a means for limiting the movement of said pendulum weight in one direction, flanges secured to said base having slots one of which extends in the logarithmic curve, arms for operatively connecting said weight to said slots, teeth on one of said flanges, and a spur gear engaging said teeth and operatively secured with said weight for the purpose as stated.

13. In a compensating sight device, a supporting member, a member secured to said supporting member and capable of both vertical and horizontal relative movement thereto, a sight mounted to move with said movable member embodying movable cross hair members, an electrometer operatively connected to each end at each of the cross hair members, a generator actuated by the vertical movement of said movable member in electric communication with two of said electrometers, and a second generator actuated by the horizontal movement of said movable member connected to the remaining two electrometers.

14. In a compensating sight, the combination of a supporting member, a movable element operatively secured to said supporting member, a sighting member rigidly secured to said movable element, a base member hingedly secured at one end to said movable element, a sight mounted on said base member, a pendulum weight below said base member, a means for limiting said pendulum weight in the direction away from said movable base member, a flange secured to the under-side of said movable base member in close proximity to its hinged portion, said flange having a slot, a second flange on the under-side of said movable base member having a curved slot and positioned a substantial distance from the hinged portion of said movable base member and two arms for operatively connecting said pendulum weight to said slots.

15. In a sighting device, the combination of a supporting mount, a movable element secured to said mount and capable of relative movement thereto, a housing secured to said movable element, a sighting member rigidly secured to said housing, a movable base member, a sight mounted on said movable base member, a pendulum weight below said base member in said housing and capable of horizontal sliding movement inside said housing, flanges secured to said member having slots, one of which extends in a curve, and arms for operatively connecting said pendulum weight to said slots.

16. In a sighting device, a supporting mount,

a movable element secured to said mount and capable of relative movement thereto, a housing rigidly secured to said movable element, a base member pivotally secured at its rear end to said housing, a sight mounted on said base member, a sight rigidly secured to said housing, a pendulum weight inside said housing and capable of sliding movement on the inside bottom of said housing; said base member having two slots, the forward end of which extends in a curve, and arms for operatively connecting said pendulum weight to said slots.

CHARLES L. PAULUS.
ROBERT KAUCH.