Nov. 13, 1945. S. D. PAYZER ET AL 2,388,799

CHIPPER KNIFE ASSEMBLY

Filed July 21, 1944 2 Sheets-Sheet 1

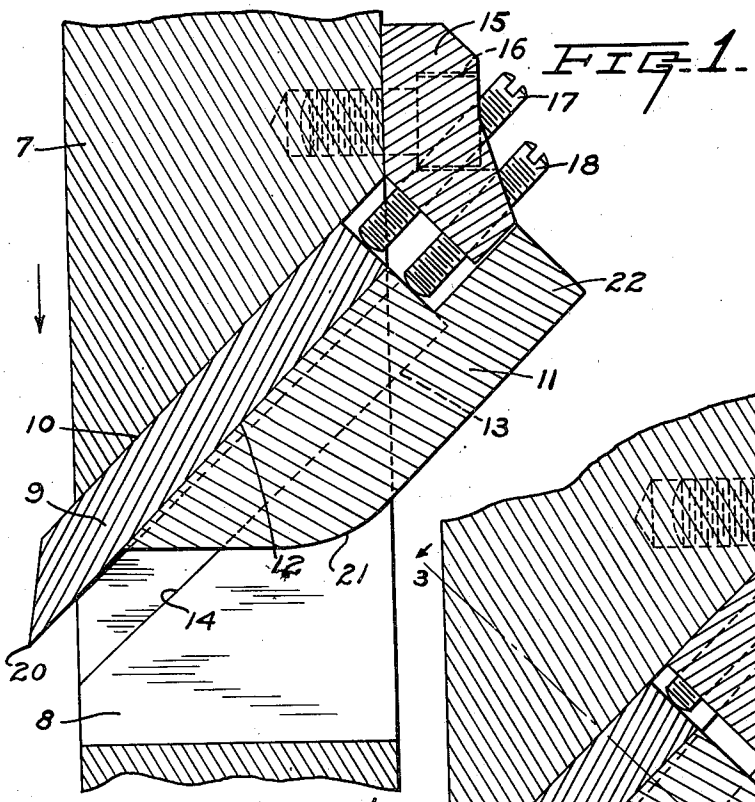

FIG. 1.

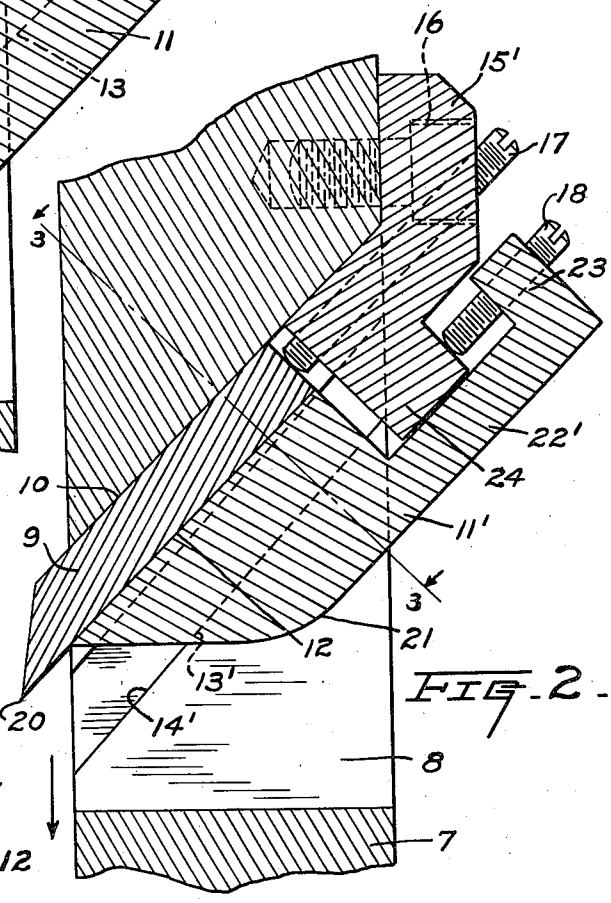

FIG. 2.

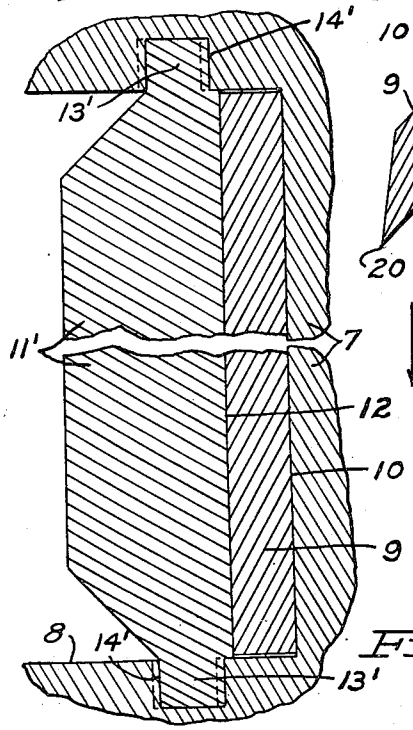

FIG. 3.

INVENTORS

S. D. Payzer

BY N. A. Gray

Lieber & Lieber

ATTORNEYS.

Nov. 13, 1945. S. D. PAYZER ET AL 2,388,799

CHIPPER KNIFE ASSEMBLY

Filed July 21, 1944 2 Sheets-Sheet 2

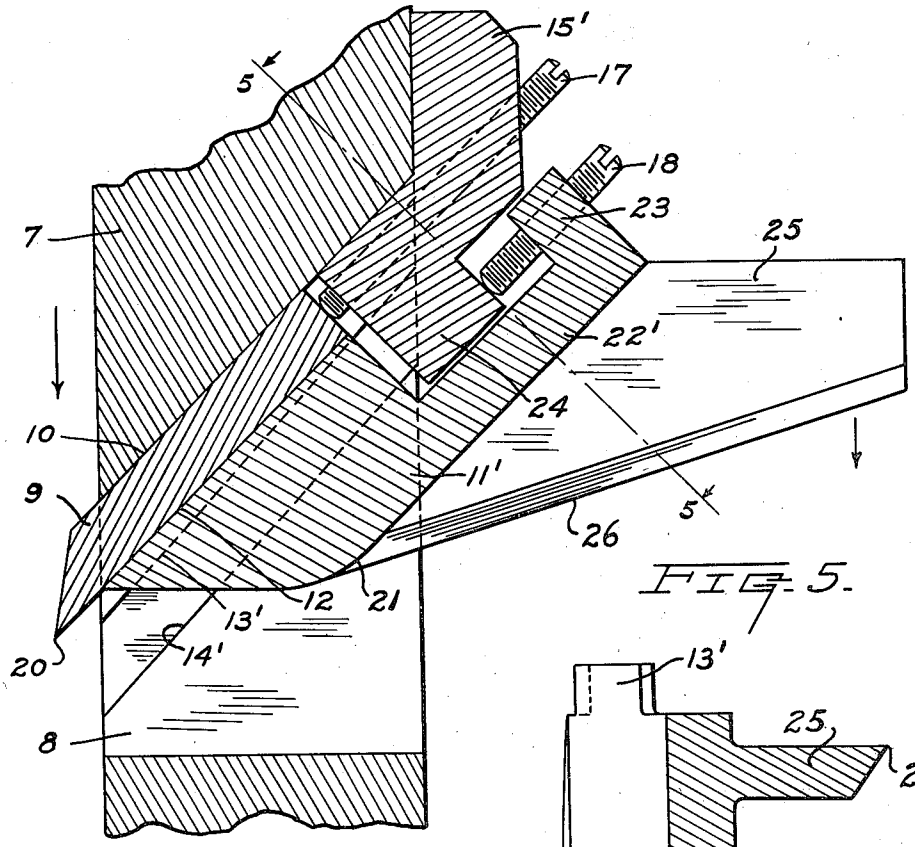

FIG. 5.

FIG. 4.

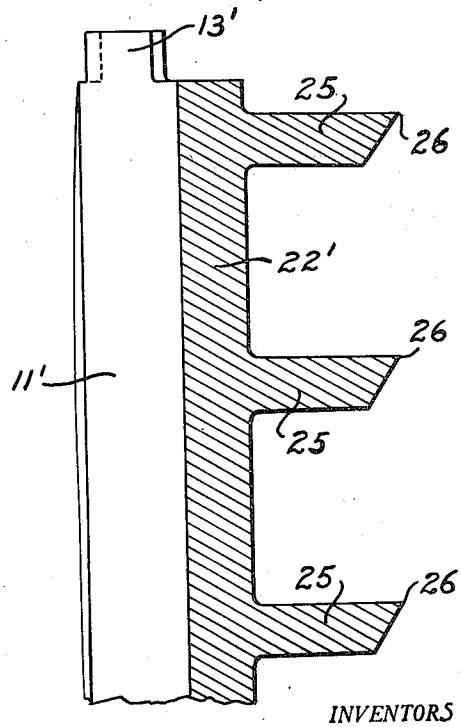

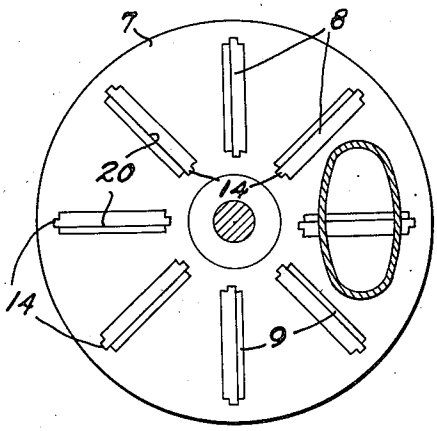

FIG. 6.

INVENTORS

S. D. Payzer

BY N. A. Gray

Lieber & Lieber

ATTORNEYS.

Patented Nov. 13, 1945 2,388,799

UNITED STATES PATENT OFFICE

2,388,799

CHIPPER KNIFE ASSEMBLY

Stanley D. Payzer and Newenham A. Gray, Wausau, Wis., assignors to D. J. Murray Manufacturing Co., Wausau, Wis., a corporation of Wisconsin

Application July 21, 1944, Serial No. 546,006

18 Claims. (Cl. 241—92)

The present invention relates in general to improvements in the art of paper manufacture, and relates more specifically to improvements in the construction and operation of chippers for cutting logs into small pieces suitable for further treatment in the production of paper or the like.

So-called chippers have long been used in the paper manufacturing industry, for the purpose of reducing logs to relatively small chips capable of being readily converted into wood pulp; and the ordinary wood chipper usually comprises a rapidly rotating disk having an annular series of cutting knives mounted thereon and cooperating with a feed spout for directing the logs into the path of the revolving knives. Because of the fact that the chipping knives are subjected to considerable wear and must frequently be re-ground, they should be readily detachable from their supporting disk in order to avoid excessive delay in the operation of these machines. The chipper knives are also formed of relatively durable and costly material, and in order to eliminate undesirable waste of such material, the knives should also be firmly mounted so as to permit numerous re-grindings and prolonged re-use thereof before they are ultimately discarded. The cost of these knives may also be reduced to a minimum by avoiding the use of clamping and adjusting devices therefor, which necessitate perforating or slotting of the blades, and other special machining operations such as the provision of screw threaded sockets therein, thus insuring most economical operation of these chippers due to replacement of knives. Then too, the rapidly revolving knives are constantly subjected to considerable shock and impact which tend to produce chattering detrimental to the entire chipping structure; and the chipping operation sometimes results in the production of "cards" or slivers which also materially interfere with the normal operation of such chipping machines.

It is therefore an object of our present invention to provide an improved chipper knife assembly, which is simple and durable in construction and highly efficient in use, and which solves all of the difficult problems encountered during normal operation of pulp wood chipping machines.

Another object of our invention is to provide a new and exceedingly useful demountable chipper knife mounting, which will permit maximum utilization of relatively inexpensive and simple knives, thereby reducing the cost of knife replacement to a minimum.

A further object of the present invention is to provide an improved chipper rotor and knife structure wherein the knives are prevented from chattering, and in which ample clearance for insuring rapid discharge of chips, knots and slivers, is also provided.

Still another object of this invention is to provide a chipper knife mounting which may also be utilized to disintegrate "cards" or relatively large and insufficiently cut pieces of wood, and which will also permit rapid and convenient removal and insertion of the knives with minimum labor.

An additional specific object of our invention is to provide an improved chipper knife assembly which is exceedingly economical in all respects, wherein accurate adjustment and firm clamping of the individual knives may be readily effected, and in which the clamping and adjusting mechanisms are amply protected against damage during normal operation of the chipper.

These and other objects and advantages of our invention will be apparent from the following detailed description.

A clear conception of the various features constituting our present improvement, and of the construction and operation of several types of chipper knife assemblages embodying the invention, may be had by referring to the drawings accompanying and forming a part of this specification wherein like reference characters designate the same or similar parts in the different views.

Fig. 1 is a transverse central section through one type of our improved chipper knife mounting, showing the same applied to a fragment of the rotatable carrier disk;

Fig. 2 is a transverse central section through another type of the improved chipper knife mounting, showing the same likewise applied to a fragment of a carrier rotor disk;

Fig. 3 is a fragmentary longitudinal or approximately radial section through the assemblages of Figs. 1 and 2, the section having been taken along the line 3—3 of Fig. 2;

Fig. 4 is another transverse central section through a modified chipper knife mounting of the type shown in Figs. 2 and 3, but having a "card" breaker associated directly therewith, and also showing the knife assemblage applied to a fragment of its rotary carrier disk;

Fig. 5 is a fragmentary longitudinal section through the wedge lock bar of the assemblage

shown in Fig. 4, the section having been taken along the line 5—5 of Fig. 4; and

Fig. 6 is a diagrammatic elevation of the working face of a typical eight knife chipper rotor embodying the invention.

While the invention has been shown and described herein as being especially applicable to and advantageously usable in a wood chipping assemblage for pulp-wood or the like in the paper making industry, it is not our desire or intent to unnecessarily restrict the scope or utility of the improvement, and it is also our intention that specific terms used herein be given the broadest possible interpretation consistent with the prior art.

Referring to Figs. 1 and 6 of the drawings, the improved push-wedge type of chipper knife assembly shown therein, comprises in general, a chipper rotor or rotary disc 7 having an annular series of elongated approximately radial through openings 8 therein; a chipper knife or blade 9 disposed within each of the rotor openings 8 with one face thereof in snug engagement with an inclined bounding surface 10 of the corresponding opening; a downwardly acting wedge lock bar 11 having a slightly convex or cambered surface 12 snugly engageable with the other face of the adjacent knife blade 9, the bar 11 spanning the adjacent opening 8 and being provided at its opposite ends with parallel integral guide projections 13 slidably engaging wedge ways or grooves 14 formed in the disc 7 adjoining the ends of each opening 8; a holding member or plate 15 detachably secured to the disc 7 adjacent to each of the openings 8, by means of a series of cap screws 16; and a number of adjusting screws 17, 18 coacting with each plate 15 and with the adjacent blade 9 and bar 11 respectively.

The rotor disc 7 which is formed of any durable material such as steel, is normally mounted for rapid rotation about a central axis so that the projecting elongated cutting edges 20 of the knives 9 will revolve in the direction indicated by the arrow; and the openings 8 of the rotor disc are of considerably greater width at their outlet sides than at their chip receiving sides, in order to insure free passage of chips therethrough. The blades or knives 9 are preferably constructed of wear resistant material such as tool steel, and as shown, these knives are entirely free from perforations, slots, threaded sockets, and other formations requiring special machinery or finishing operations, see Figs. 1 and 3. The wedge lock bars 11 which span the rotor opening 8 may also be formed of steel or the like, and the convex curvature or camber which is applied to the blade engaging faces 12 of the bars 11, is only sufficient so that when the wedge bars 11 are driven home the camber will be taken up and the blocks will then engage the adjacent blades 9 along substantially plane surfaces. This camber is shown in exaggerated form in Fig. 5, and the advantage of this camber formation of the wedge bars 11 between the wedge ways 14, is that the initial pressure applied to the medial portions of each blade 9 when the corresponding wedge is being driven forward, will spread in both directions toward the wedge ways 14 until the entire lock bar face 12 bears against the blade 9 with substantially uniform pressure, thus positively eliminating fluttering or chattering of the blades 9 during normal operation.

The bearing surface 12 of each wedge bar 11 is disposed at a slight angle relative to the guiding projections 13 and wedge way grooves 14, and each wedge bar 11 is provided with a curved portion 21 adjoining the corresponding opening 8 and also has a flange 22 extending rearwardly away from this disc opening 8 adjacent to the corresponding holding plate 16. The adjusting screws 17 are screw threaded in the holding plate 16 and coact with the rear plane ends of the adjacent blade 9, while the other adjusting screws 18 are likewise screw threaded in the plate 16 and coact with the adjacent wedge lock bar 11, and the flange 22 of the bar 11 serves to protect these adjusting screws 17, 18 against possible damage. The screws 17 may obviously be utilized to adjust the cutting edges 20 of the individual blades 9 so as to insure proper cutting by the successive blades, and the other screws 18 serve to drive the wedge bars 11 into clamping and locking engagement with the blades 9, thereby providing an absolutely rigid knife holding assemblage when the screws 17, 18 are properly adjusted. The knife blades 9, may however be quickly and conveniently removed by merely releasing the adjusting screws 18 and withdrawing the adjacent wedge bars 11, and these bars cooperate with the openings 8 to provide free and unobstructed passageways for the chips, and also effectively protect the adjusting screws 17, 18 against possible damage during rapid revolution of the knife carrier disc 7.

Referring more especially to Figs. 2 and 3, the pull-wedge type of chipper knife assemblage shown therein, comprises in general, a rotary chipper disc 7 having an annular series of elongated through openings 8 therein; a knife blade 9 disposed within each of the openings 8 with one flat face thereof normally in snug engagement with an inclined bounding surface 10 of the adjacent opening 8; an upwardly acting modified wedge lock bar 11' having a slightly cambered surface 12 which is snugly engageable with the other flat face of the blade 9, the bar 11' likewise spanning the adjoining opening 8 and being provided at its opposite ends with parallel integral guide projections 13' slidably engaging wedge ways 14' formed at the opposite ends of each opening 8; a modified holding bar or plate 15' detachably but firmly secured to the disc 7 near each opening 8 by means of cap screws 16; and a number of adjusting screws 17, 18 coacting with each plate 15 and with the adjacent blade 9 and bar 11' respectively.

In the modification of Figs. 2 and 3, the rotor disc 7 is constructed practically the same as in Fig. 1, except perhaps for the specific location of the wedge groove or wedge ways 14', and the structure of the blades 9 is also the same; but the wedge lock bars 11' and the holding plates 15' are of somewhat different construction. The wedge lock bars 11' are provided with convex or cambered surfaces cooperable with the blades 9 as described hereinabove, and the bearing surface 12 of each bar 11' is again disposed at a slight angle relative to the guiding projections 13' and wedge way grooves 14', each wedge bar 11' also being provided with a curved portion 21 for providing proper chip clearance. Each of the modified wedge bars 11' is furthermore provided with a rearwardly and upwardly projecting flange 22' having an inwardly extending portion 23 formed integral with the rear end thereof. Each of the modified holding plates 15' is provided with an integral outwardly extending portion 24 projecting toward the flange 22' of the adjacent wedge bar 11', and the wedge adjusting screws 18 are

screw threaded in the wedge portion 23 and coact with the adjacent holding plate portion 24, so that by manipulating the screws 18 the wedge bars 11 may be drawn upwardly into clamping engagement with the adjacent blades 9. The adjusting screws 17 are again screw threaded into the holding plates 15', and coact with the inner plane ends of the adjacent blades 9, and the wedge bars 11' are obviously pulled into clamping engagement with the blades 9 instead of being pushed into such clamping engagement as in Fig. 1. Because of the fact that the wedge bars 11' are of relatively heavy construction, this modified structure of Figs. 2 and 3 avoids necessity of having the operator hold the heavy wedge bars 11' when removing and inserting the blades 9. In both cases the clamping action is however substantially the same, and when the adjusting screws 17, 18 have been properly adjusted, an absolutely rigid knife-holding assemblage is again provided. The knife blades 9 of the modified structure, may also be quickly and conveniently removed by merely releasing the adjusting screws 18 and lowering the adjacent wedge bars 11', and there bars obviously cooperate with the openings 8 to again provide free and unobstructed passage for the chips while also effectively protecting the adjusting screws 17, 18 against possible damage during normal operation of the machine.

Referring specifically to Figs. 4 and 5 of the drawings, the further modified chipper knife mounting assemblage disclosed therein is of the same general type as that shown in Figs. 2 and 3. In this modification, the rotor disc 7, knife blade 9, wedge lock bar 11', holding plate 15', cap screws 16, and adjusting screws 17, 18, are all substantially the same in construction and operation, as in Figs. 2 and 3, except that each wedge lock bar 11' is provided with a series of "card" or sliver disintegrating cutter ribs 25 projecting rearwardly therefrom and beyond the adjacent chip delivering opening 8. These card breaker ribs 25 may either be formed integral with the bars 11', or they may be detachably but rigidly attached to these bars in any suitable manner, and each rib 25 is provided with a cutting edge 26 which is rapidly revolvable in the direction of the arrow when the carrier disc 7 is rotating at its normal high speed and which may be caused to cooperate with adjacent fixed structure. During normal operation of the machine, the "cards," slivers, and other excessively long pieces of material which are delivered through the openings 8, will be transferred by the ribs 25 to the adjacent stationary structure which may also be provided with ribs having cutting edges, and the cards will then be subjected to intense impact and cutting action by the cooperating moving and fixed cutters, thus effectively disintegrating or breaking these larger pieces of material into sizes comparable with the ordinary chips.

From the foregoing detailed description, it will be apparent that my present invention provides an improved chipper knife assemblage which besides being simple and exceedingly durable in construction, is highly efficient in use and eliminates the difficulties heretofore encountered with similar assemblages. The knife blades 9 besides being conveniently removable and insertible with minimum effort on the part of the operator, are also readily adjustable so as to insure most effective functioning thereof, and the improved clamping mechanism will obviously permit maximum utilization of the blades without introducing undesirable fluttering or chattering thereof. The blade holding assemblages moreover permit the use of simple knives formed of ordinary prismatic bar stock, and the knife clamping structure additionally avoids obstructing the chip discharge openings and provides for free delivery of the chips from the chipper rotor. By providing a card breaker such as shown in Figs. 4 and 5, the product may also be reduced to relatively uniform size in the chip producing machine, and the specific type of assemblage shown in Figs. 2 and 3 will also positively prevent the wedge lock bars from falling through the openings when the blades have been removed. The entire structure will obviously insure most economical operation of the chipping machines, while permitting accurate adjustment and firm clamping of the individual blades to be effected at all times, and the improved clamping mechanisms are moreover amply protected against possible damage or loosening during normal operation of the machines by virtue of the specific construction of the wedge bars with protecting flanges thereon. The present improvement may be readily applied to pulp wood chippers of the disc type or to other similar machines, and greatly facilitates the operation and maintenance of such equipment.

It should be understood that it is not desired to limit this invention to the exact details of construction or to the precise mode of use, herein shown and described, for various modifications within the scope of the appended claims may occur to persons skilled in the art.

We claim:

1. In combination, a rotor having a through opening, a knife blade having one side coacting with a face of said opening, a wedge bar coacting with the opposite side of said blade, a reaction member associated with said rotor adjacent to said opening, and adjusting elements coacting with said member and with said blade and bar respectively and being operable to effect independent movement of said blade and bar relative to each other.

2. In combination, a rotor having a through opening, a knife blade having one side coacting with a face of said opening, a wedge bar coacting with the opposite side of said blade, a reaction member associated with said rotor adjacent to said opening, and adjusting elements coacting with said member and with said blade and bar respectively and being operable to effect independent movement of said blade and bar relative to each other, said wedge bar being deflectable and having a camber coacting with said blade.

3. In combination, a rotor having a through opening, a knife blade having one side slidably cooperable with a face of said opening, a wedge bar having a face slidably cooperable with the opposite side of said blade, a reaction member associated with said rotor near said opening and adjacent to said blade and bar, an adjusting element cooperable with said member and with the end of said blade to effect sliding of said blade along said opening face, and another adjusting element cooperable with said member and with said wedge bar to effect sliding of said bar along said blade and clamping of the blade against said opening face.

4. In combination, a rotor having a through opening, a knife blade having one side slidably cooperable with a face of said opening, a wedge bar having a face slidably cooperable with the opposite side of said blade, a reaction member associated with said rotor near said opening and

adjacent to said blade and bar, an adjusting element cooperable with said member and with the end of said blade to effect sliding of said blade along said opening face, and another adjusting element cooperable with said member and with said wedge bar to effect sliding of said bar along said blade and clamping of the blade against said opening face, said wedge bar being deflectable and said face thereof being cambered toward said blade.

5. In combination, a rotor having a through opening provided with an inclined bounding face and also having wedge ways adjoining said opening, a knife blade having one side coacting with said face, a wedge bar having a face coacting with the opposite side of said blade and also having guides coacting with said wedge ways, and adjusting screws coacting with said rotor and with said blade and bar respectively and being operable to effect independent movement of the blade and bar relative to the rotor and each other.

6. In combination, a rotor having a through opening provided with an inclined bounding face and also having wedge ways adjoining said opening, a knife blade having one side coacting with said face, a wedge bar having a face coacting with the opposite side of said blade and also having guides coacting with said wedge ways, and adjusting screws coacting with said rotor and with said blade and bar respectively and being operable to effect independent movement of the blade and bar relative to the rotor and each other, said wedge having a flange for protecting said screws against damage.

7. In combination, a rotor having a through opening provided with an inclined bounding face and also having wedge ways adjoining said opening, a knife blade having one side coacting with said face, a wedge bar having a face coacting with the opposite side of said blade and also having guides coacting with said wedge ways, and adjusting screws coacting with said rotor and with said blade and bar respectively and being operable to effect independent movement of the blade and bar relative to the rotor and each other, said wedge bar being deflectable and having a camber coacting with said blade.

8. In combination, a rotor having a through opening provided with wedge ways at its opposite ends, a knife blade having one flat side slidably coacting with a flat bounding face of said opening, a wedge bar having a cambered face slidably coacting with the opposite flat face of said blade and also having opposite ends slidingly cooperable with said wedge ways, and adjusting screws associated with said rotor and being cooperable with said blade and bar respectively to effect independent sliding movement thereof.

9. In combination, a rotor having a through opening provided with wedge ways at its opposite ends, a knife blade having one flat side slidably coacting with a flat bounding face of said opening, a wedge bar having a cambered face slidably coacting with the opposite flat face of said blade and also having opposite ends slidingly cooperable with said wedge ways, and adjusting screws associated with said rotor and being cooperable with said blade and bar respectively to effect independent sliding movement thereof, said wedge bar having a flange for protecting said screws against impact from loose material during normal rotation of said rotor.

10. In combination, a rotor having a through opening and being provided with wedge ways adjoining said opening, a knife blade having one flat side slidably coacting with a flat bounding face of said opening, a wedge bar having a cambered face slidably coacting with the opposite flat face of said blade and also having opposite ends slidingly cooperable with said wedge ways, an adjusting element cooperable with said rotor and with said blade to effect movement of the blade along said opening face, and another adjusting element cooperable with said rotor and said bar to effect clamping movement of said bar relative to said blade.

11. In combination, a rotor having a through opening and being provided with wedge ways adjoining said opening, a knife blade having one flat side slidably coacting with a flat bounding face of said opening, a wedge bar having a cambered face slidably coacting with the opposite flat face of said blade and also having opposite ends slidingly cooperable with said wedge ways, a reaction plate secured to said rotor near said blade and bar, and independent adjusting screws coacting with said plate and with said blade and bar respectively.

12. In combination, a rotor having a through opening and being provided with wedge ways adjoining said opening, a knife blade having one flat side slidably coacting with a flat bounding face of said opening, a wedge bar having a cambered face slidably coacting with the opposite flat face of said blade and also having opposite ends slidingly cooperable with said wedge ways, a reaction plate secured to said rotor near said blade and bar, independent adjusting screws coacting with said plate and with said blade and bar respectively, and means carried by said wedge bar and coacting with said plate to protect said screws against damage.

13. In combination, a rotor having a through opening provided with wedge ways, a knife blade having one side slidably contacting a bounding face of said opening, a wedge slidably contacting the opposite face of said blade and having opposite ends slidably cooperable with said wedge ways, a reaction plate detachably secured to said rotor and extending across said blade and wedge, an adjusting screw interposed between said plate and said blade for effecting movement of the blade relative to the rotor, and another adjusting screw interposed between said plate and said wedge for effecting independent movement of the wedge relative to said rotor.

14. In combination, a rotor having a through opening provided with wedge ways, a knife blade having one side slidably contacting a bounding face of said opening, a wedge slidably contacting the opposite face of said blade and having opposite ends slidably cooperable with said wedge ways, a reaction plate detachably secured to said rotor and extending across said blade and wedge, an adjusting screw interposed between said plate and said blade for effecting movement of the blade relative to the rotor, another adjusting screw interposed between said plate and said wedge for effecting independent movement of the wedge relative to said rotor, and a series of breaker projections carried by said wedge and extending outwardly of said rotor away from said opening.

15. In combination, a rotor having a through opening and wedge ways adjoining the opening, a knife blade having one side slidably contacting a bounding face of said opening, a wedge slidably contacting the opposite face of said blade and having opposite ends slidably cooperable with

said wedge ways, a reaction plate detachably secured to said rotor and extending across said blade and wedge, and adjusting screws interposed between said plate and blade and between said plate and wedge for effecting independent movement of said blade and wedge, said wedge having a portion extending over said plate to prevent the wedge from dropping out of said opening.

16. In combination, a rotor having a through opening and wedge ways adjoining the opening, a knife blade having one side slidably contacting a bounding face of said opening, a wedge slidably contacting the opposite face of said blade and having opposite ends slidably cooperable with said wedge ways, a reaction member secured to said rotor and extending across said blade and wedge, adjusting elements interposed between said plate and said blade and between said plate and said wedge for effecting independent movement of said blade and wedge, and breaker projections carried by said wedge and extending away from said opening.

17. In combination, a rotor having a through opening and wedge ways adjoining the opening, a knife blade contacting a bounding face of said opening, a wedge slidably and clampingly engaging said knife blade and having opposite ends slidably cooperable with said wedge ways, means for effecting adjustment of said blade and wedge relative to each other, and breaker projections extending from said wedge and outwardly away from said opening.

18. In combination, a rotor having a through opening, a knife blade mounted within said opening, an adjustable wedge for clamping said blade to said rotor within said opening, and a series of breaker plates carried by said wedge and extending outwardly away from said opening.

STANLEY D. PAYZER.
NEWENHAM A. GRAY.