(12) STANDARD PATENT (11) Application No. **AU 2016222372 B2**
(19) AUSTRALIAN PATENT OFFICE

(54) Title
MDCT-BASED COMPLEX PREDICTION STEREO CODING

(51) International Patent Classification(s)
G10L 19/00 (2006.01) ***G10L 19/008*** (2013.01)

(21) Application No: **2016222372** (22) Date of Filing: **2016.08.31**

(43) Publication Date: **2016.09.15**
(43) Publication Journal Date: **2016.09.15**
(44) Accepted Journal Date: **2018.06.28**

(62) Divisional of:
2014200719

(71) Applicant(s)
Dolby International AB

(72) Inventor(s)
Carlsson, Pontus;Purnhagen, Heiko;Villemoes, Lars

(74) Agent / Attorney
Chrysiliou IP, 114-115 Biztek 20 Dale Street Brookvale, Sydney, NSW, 2100, AU

(56) Related Art
PURNHAGEN, H. et al., 'Technical description of proposed Unified Stereo Coding in USAC', October 2009

2016222372 31 Aug 2016

ABSTRACT

The present invention is directed to a decoder system for providing a stereo signal from a bit stream signal by complex prediction stereo coding. The decoder system comprises an upmix stage adapted to generate the stereo signal based on first frequency-domain representations of a downmix signal (M) and a residual signal (D), each of the first frequency-domain representations comprising first spectral components representing spectral content of the corresponding signal expressed in a first subspace of a multidimensional space. The upmix stage comprises a module for computing a second frequency-domain representation of the downmix signal based on the first frequency-domain representation thereof, the second frequency-domain representation comprising second spectral components representing spectral content of the signal expressed in a second subspace of the multidimensional space that includes a portion of the multidimensional space not included in the first subspace, wherein the module is adapted to determine the second spectral components of the downmix signal by applying a Finite Impulse Reponse (FIR) filter to the first spectral components of the downmix signal; a weighted summer for computing a side signal (S) on the basis of the first and second frequency-domain representations of the downmix signal, the first frequency-domain representation of the residual signal and a complex prediction coefficient (α) encoded in the bit stream signal; and a sum-and-difference stage for computing the stereo signal on the basis of the first frequency-domain representation of the downmix signal and the side signal. The decoder system comprises a first frequency-domain modifier stage arranged upstream of the upmix stage and operable in an active mode, in which it processes a frequency-domain representation of at least one signal, and a passive mode, in which it acts as a pass-through; and a second frequency-domain modifier stage arranged downstream of the upmix stage and operable in an active mode, in which it processes a frequency-domain representation of at least one signal, and a passive mode, in which it acts as a pass-through.

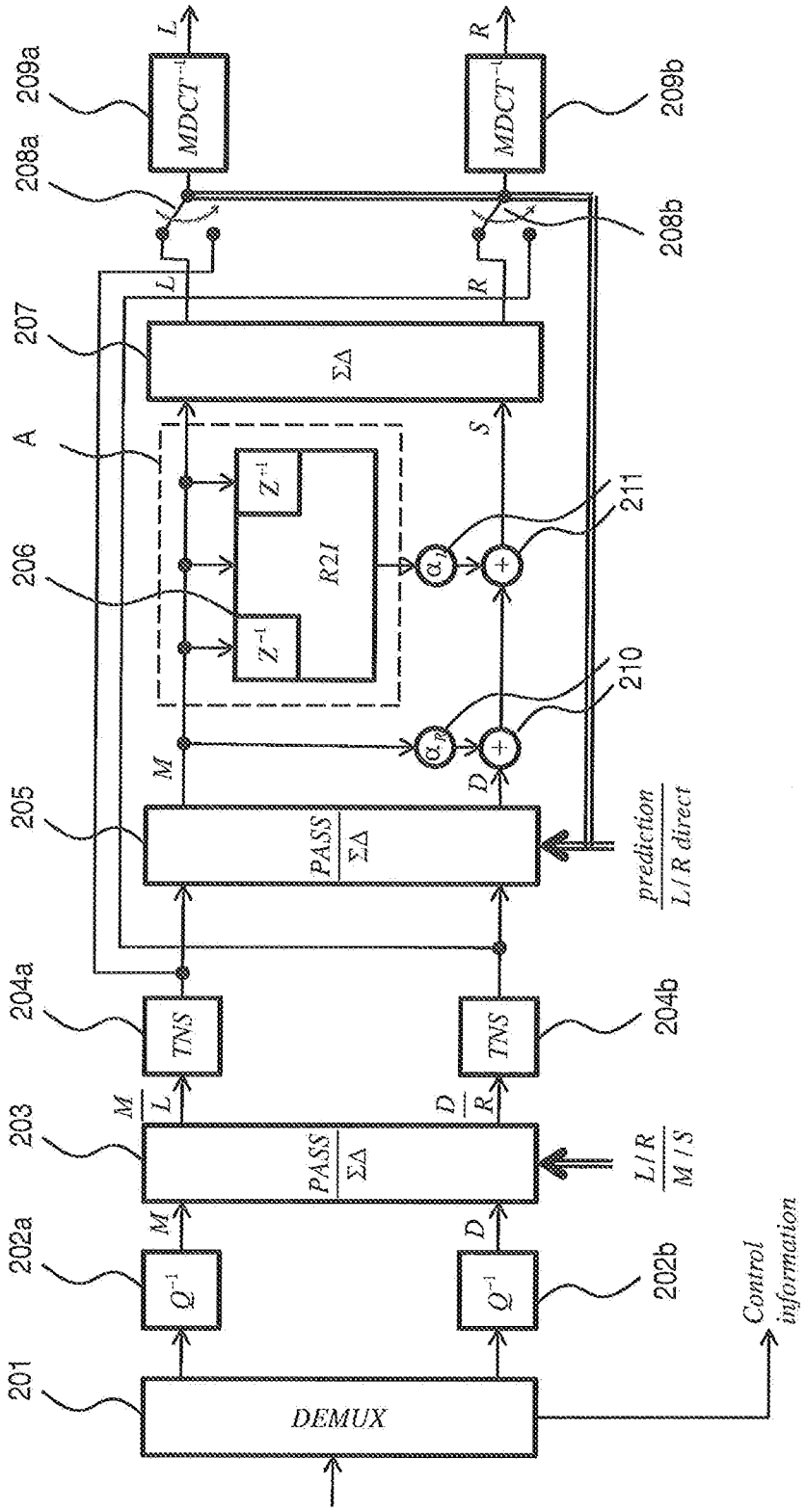
201
DEMUX
202a
Q^{-1}
202b
Q^{-1}
203
PASS
ΣΔ
M
L
D
R
L / R
M / S
204a
TNS
204b
TNS
205
PASS
ΣΔ
M
D
206
A
Z^{-1}
R2I
Z^{-1}
α_1
α_R
210
211
207
ΣΔ
L
R
S
208a
208b
209a
$MDCT^{-1}$
209b
$MDCT^{-1}$
L
R
prediction
L / R direct
Control information

Fig. 2

2016222372 31 Aug 2016

MDCT- BASED COMPLEX PREDICTION STEREO CODING

Related Applications

This application is a divisional application of Australian Patent Application No. 2014200719 which is a divisional of 2011237869, the entire contents of the parent applications are incorporated herein by reference.

Technical field

The invention disclosed herein generally relates to stereo audio coding and more precisely to techniques for stereo coding using complex prediction in the frequency domain.

Background of the invention

Joint coding of the left (L) and right (R) channels of a stereo signal enables more efficient coding compared to independent coding of L and R. A common approach for joint stereo coding is mid/side (M/S) coding. Here, a mid (M) signal is formed by adding the L and R signals, e.g. the M signal may have the form

$$M = (L + R)/2$$

Also, a side (S) signal is formed by subtracting the two channels L and R, e.g., the S signal may have the form

$$S = (L - R)/2$$

In the case of M/S coding, the M and S signals are coded instead of the L and R signals.

In the MPEG (Moving Picture Experts Group) AAC (Advanced Audio Coding) standard (see standard document ISO/IEC 13818-7), L/R stereo coding and M/S stereo coding can be chosen in a time-variant and frequency-variant manner. Thus, the stereo encoder can apply L/R coding for some frequency bands of the stereo signal, whereas M/S coding is used for encoding other frequency bands of the stereo signal (frequency variant). Moreover, the encoder can switch over time between L/R and M/S coding (time-variant). In MPEG AAC, the stereo encoding is carried out in the frequency domain, more particularly the MDCT (modified discrete cosine transform) domain. This allows choosing adaptively either L/R or M/S coding in a frequency and also time variable manner.

Parametric stereo coding is a technique for efficiently coding a stereo audio signal as a monaural signal plus a small amount of side information for

2016222372 31 Aug 2016

stereo parameters. It is part of the MPEG-4 Audio standard (see standard document ISO/IEC 14496-3).The monaural signal can be encoded using any audio coder. The stereo parameters can be embedded in the auxiliary part of the mono bit stream, thus achieving full forward and backward compatibility. In the decoder, it is the monaural signal that is first decoded, after which the stereo signal is reconstructed with the aid of the stereo parameters. A decorrelated version of the decoded mono signal, which has zero cross correlation with the mono signal, is generated by means of a decorrelator, e.g., an appropriate all-pass filter which may include one or more delay lines. Essentially, the decorrelated signal has the same spectral and temporal energy distribution as the mono signal. The monaural signal together with the decorrelated signal are input to the upmix process which is controlled by the stereo parameters and which reconstructs the stereo signal. For further information, see the paper "Low Complexity Parametric Stereo Coding in MPEG-4", H. Purnhagen, Proc. of the 7th Int. Conference on Digital Audio Effects (DAFx'04), Naples, Italy, October 5–8, 2004, pages 163–168.

MPEG Surround (MPS; see ISO/IEC 23003-1 and the paper "MPEG Surround – The ISO/MPEG Standard for Efficient and Compatible Multi-Channel Audio Coding", J. Herre et al., Audio Engineering Convention Paper 7084, 122nd Convention, May 5–8, 2007) allows combining the principles of parametric stereo coding with residual coding, substituting the decorrelated signal with a transmitted residual and hence improving the perceptual quality. Residual coding may be achieved by downmixing a multi-channel signal and, optionally, by extracting spatial cues. During the process of downmixing, residual signals representing the error signal are computed and then encoded and transmitted. They may take the place of the decorrelated signals in the decoder. In a hybrid approach, they may replace the decorrelated signals in certain frequency bands, preferably in relatively low bands.

According to the current MPEG Unified Speech and Audio Coding (USAC) system, of which two examples are shown in figure 1, the decoder comprises a complex-valued quadrature mirror filter (QMF) bank located downstream of the core decoder. The QMF representation obtained as the output of the filter bank is complex – thus oversampled by a factor two – and

2016222372 31 Aug 2016

can be arranged as a downmix signal (or, equivalently, mid signal) M and a residual signal D, to which an upmix matrix with complex entries is applied. The L and R signals (in the QMF domain) are obtained as:

$$\begin{bmatrix} L \\ R \end{bmatrix} = g \begin{bmatrix} 1-\alpha & 1 \\ 1+\alpha & -1 \end{bmatrix} \begin{bmatrix} M \\ D \end{bmatrix}$$

where g is a real-valued gain factor and α is a complex-valued prediction coefficient. Preferably, α is chosen such that the energy of the residual signal D is minimized. The gain factor may be determined by normalization, that is, to ensure that the power of the sum signal is equal to the sum of the powers of the left and right signals. The real and imaginary parts of each of the L and R signals are mutually redundant – in principle, each of them can be computed on the basis of the other – but are beneficial for enabling the subsequent application of a spectral band replication (SBR) decoder without audible aliasing artifacts occurring. The use of an oversampled signal representation may also, for similar reasons, be chosen with the aim of preventing artifacts connected with other time- or frequency-adaptive signal processing (not shown), such as the mono-to-stereo upmix. Inverse QMF filtering is the last processing step in the decoder. It is noted that the band-limited QMF representation of the signal allows for band-limited residual techniques and "residual fill" techniques, which may be integrated into decoders of this type.

The above coding structure is well suited for low bit rates, typically below 80 kb/s, but is not optimal for higher bit rates with respect to computational complexity. More precisely, at higher bitrates, the SBR tool is typically not utilized (as it would not improve coding efficiency). Then, in a decoder without a SBR stage, only the complex-valued upmix matrix motivates the presence of the QMF filter bank, which is computationally demanding and introduces a delay (at a frame length of 1024 samples, the QMF analysis/synthesis filter bank introduces a delay of 961 samples). This clearly indicates a need for a more efficient coding structure.

Summary of the invention

Embodiments of the present invention may provide methods and apparatus for stereo coding that are computationally efficient also in the high bitrate range.

2016222372 31 Aug 2016

In particular, embodiments of the invention may provide a coder and decoder, coding and decoding methods and computer program products for coding and decoding, respectively, as defined by the independent claims. The dependent claims define embodiments of the invention.

According to one aspect of the invention, there is provided a decoder system for providing a stereo signal from a bit stream signal by complex prediction stereo coding, the decoder system comprising:

an upmix stage adapted to generate the stereo signal based on first frequency-domain representations of a downmix signal (M) and a residual signal (D), each of the first frequency-domain representations comprising first spectral components representing spectral content of the corresponding signal expressed in a first subspace of a multidimensional space, the upmix stage comprising:

a module for computing a second frequency-domain representation of the downmix signal based on the first frequency-domain representation thereof, the second frequency-domain representation comprising second spectral components representing spectral content of the signal expressed in a second subspace of the multidimensional space that includes a portion of the multidimensional space not included in the first subspace, wherein the module is adapted to determine the second spectral components of the downmix signal by applying a Finite Impulse Reponse (FIR) filter to the first spectral components of the downmix signal;

a weighted summer for computing a side signal (S) on the basis of the first and second frequency-domain representations of the downmix signal, the first frequency-domain representation of the residual signal and a complex prediction coefficient (α) encoded in the bit stream signal; and

a sum-and-difference stage for computing the stereo signal on the basis of the first frequency-domain representation of the downmix signal and the side signal;

a first frequency-domain modifier stage arranged upstream of the upmix stage and operable in an active mode, in which it processes a

2016222372 31 Aug 2016

frequency-domain representation of at least one signal, and a passive mode, in which it acts as a pass-through; and

a second frequency-domain modifier stage arranged downstream of the upmix stage and operable in an active mode, in which it processes a frequency-domain representation of at least one signal, and a passive mode, in which it acts as a pass-through.

There is also disclosed herein, a decoder system for providing a stereo signal by complex prediction stereo coding, the decoder system comprising:

an upmix adapted to generate the stereo signal based on first frequency-domain representations of a downmix signal (M) and a residual signal (D), each of the first frequency-domain representations comprising first spectral components representing spectral content of the corresponding signal expressed in a first subspace of a multidimensional space, the upmix stage comprising:

a module for computing a second frequency-domain representation of the downmix signal based on the first frequency-domain repre sentation thereof, the second frequency-domain representation com prising second spectral components representing spectral content of the signal expressed in a second subspace of the multidimensional space that includes a portion of the multidimensional space not included in the first subspace;

a weighted summer for computing a side signal (S) on the basis of the first and second frequency-domain representations of the downmix signal, the first frequency-domain representation of the residual signal and a complex prediction coefficient (a) encoded in the bit stream signal; and

a sum-and-difference stage for computing the stereo signal on the basis of the first frequency-domain representation of the downmix signal and the side signal,

wherein the upmix stage is further operable in a pass-through mode, in which said downmix and residual signals are supplied to the sum-and difference directly.

2016222372 31 Aug 2016

There is also disclosed herein, an encoder system for encoding a stereo signal by a bit stream signal by complex prediction stereo coding, including:

an estimator for estimating a complex prediction coefficient;

a coding stage operable to:

(a) transform the stereo signal into a frequency-domain representation of a downmix and a residual signal, in a relationship determined by the value of the complex prediction coefficient;

and

a multiplexer for receiving output from the coding stage and the estimator and encoding this by said bit stream signal.

According to another aspect of the invention, there is provided a decoding method for upmixing an input stereo signal by complex prediction stereo coding into an output stereo signal, wherein:

said input stereo signal comprises first frequency-domain representations of a downmix channel (M) and a residual channel (D) and a complex prediction coefficient (α); and

each of said first frequency-domain representations comprises first spectral components representing spectral content of the corresponding signal expressed in a first subspace of a multidimensional space,

the method being performed by an upmix stage and including the steps of:

computing a second frequency-domain representation of the downmix channel based on the first frequency-domain representation thereof, the second frequency-domain representation comprising second spectral components representing spectral content of the signal expressed in a second subspace of the multidimensional space that includes a portion of the multidimensional space not included in the first subspace, wherein computing a second frequency-domain representation of the downmix signal includes determining the second spectral components of the downmix signal by applying a Finite Impulse Reponse (FIR) filter to the first spectral components of the downmix signal;

computing the side channel on the basis of the first and second frequency-domain representations of the downmix signal, the first frequency-

2016222372 31 Aug 2016

domain representation of the residual signal and the complex prediction coefficient;

and further comprising either the step, to be performed prior to the step of upmixing, of applying temporal noise shaping, TNS, to said first frequency-domain representation of the downmix signal and/or said first frequency-domain representation of the residual signal;

or the step, to be performed after the step of upmixing, of applying TNS to at least one channel of said stereo signal.

There are also disclosed herein methods for encoding a stereo signal into a bit stream and for decoding a bit stream into at least one stereo signal. The technical features of each method are analogous to those of the encoder system and the decoder system, respectively. Embodiments of the invention may further provide a computer program product containing instructions for executing each of the methods on a computer.

Embodiments of the invention may benefit from the advantages of unified stereo coding in the MPEG USAC system. These advantages are preserved also at higher bit rates, at which SBR is typically not utilized, without the significant increase in computational complexity that would accompany a QMF-based approach. This is possible because the critically sampled MDCT transform, which is the basis of the MPEG USAC transform coding system, may be used for complex prediction stereo coding, at least in cases where the code audio bandwidths of the downmix and residual channels are the same and the upmix process does not include decorrelation. This means that an additional QMF transform is not required any longer. A representative im-plementation of complex-prediction stereo coding in the QMF domain would actually increase the number of operations per unit time significantly com-pared to traditional L/R or M/S stereo. Thus, the coding apparatus appears to be competitive at such bitrates, providing high audio quality at moderate computational expense.

As the skilled person realizes, the fact that the upmix stage is further operable in a pass-through mode enables the decoder to adaptively decode according to conventional direct or joint coding and complex prediction cod-

2016222372 31 Aug 2016

ing, as determined on the encoder side. Hence, in those cases where the decoder cannot positively increase the level of quality beyond that of conventional direct L/R stereo coding or joint M/S stereo coding, it can at least guarantee that the same level is maintained. Thus, such a decoder may, from a functional point of view, be regarded as a superset in relation to the background art.

As an advantage over QMF-based prediction-coded stereo, perfect reconstruction of the signal is possible (apart from quantization errors, which can be made arbitrarily small).

There is further disclosed herein, a coding apparatus for transform-based stereo coding by complex prediction. Preferably, the apparatus is not limited to complex prediction stereo coding, but is operable also in a direct L/R stereo coding or joint M/S stereo coding regime according to the background art, so that it is possible to select the most suitable coding method for a particular application or during a particular time interval.

An oversampled (e.g., complex) representation of the signal, including both said first and said second spectral components, is used as a basis for the complex prediction, and hence, modules for computing such oversampled representation are arranged in the encoder system and the decoder system. The spectral components refer to first and second subspaces of a multidimensional space, which may be the set of time-dependent functions on an interval of given length (e.g., a predefined time frame length) sampled at a finite sampling frequency. It is well-known that functions in this particular multidimensional space may be approximated by a finite weighted sum of base functions.

As the skilled person will appreciate, an encoder adapted to cooperate with a decoder is equipped with equivalent modules for providing the oversampled representation on which the prediction coding is based, so as to enable faithful reproduction of the encoded signal. Such equivalent modules may be identical or similar modules or modules having identical or similar

2016222372 31 Aug 2016

transfer characteristics. In particular, the modules in the encoder and decoder, respectively, may be similar or dissimilar processing units executing respective computer programs that perform equivalent sets of mathematical operations.

In some embodiments of the decoder system or of the encoder system, the first spectral components have real values expressed in the first subspace, and the second spectral components have imaginary values expressed in the second subspace. The first and second spectral components together form a complex spectral representation of the signal. The first subspace may be the linear span of a first set of base functions, while the second subspace may be the linear span of a set of second base functions, some of which are linearly independent of the first set of base functions.

In one embodiment, the module for computing the complex representation is a real-to-imaginary transform, i.e., a module for computing imaginary parts of the spectrum of a discrete-time signal on the basis of a real spectral representation of the signal. The transform may be based on exact or approximate mathematical relations, such as formulas from harmonic analysis or heuristic relations.

In some embodiments of the decoder system or of the encoder system, the first spectral components are obtainable by a time-to-frequency domain transform, preferably a Fourier transform, of a discrete time-domain signal, such as by a discrete cosine transform (DCT), a modified discrete cosine transform (MDCT), a discrete sine transform (DST), a modified discrete sine transform (MDST), a fast Fourier transform (FFT), a prime-factor-based Fourier algorithm or the like. In the first four cases, the second spectral components may then be obtainable by DST, MDST, DCT and MDCT, respectively. As is well known, the linear span of cosines that are periodic on the unit interval forms a subspace that is not entirely contained in the linear span of sines periodic on the same interval. Preferably, the first spectral components are obtainable by MDCT and the second spectral components are obtainable by MDST.

In one embodiment, the decoder system includes at least one temporal noise shaping module (TNS module, or TNS filter), which is arranged up-

2016222372 31 Aug 2016

stream of the upmix stage. Generally speaking, the use of TNS increases the perceived audio quality for signals with transient-like components, and this also applies to embodiments of the inventive decoder system featuring TNS. In conventional L/R and M/S stereo coding, the TNS filter may be applied as a last processing step in the frequency domain, directly before the inverse transform. In case of complex-prediction stereo coding, however, it is often advantageous to apply the TNS filter on the downmix and residual signals, that is, before the upmix matrix. Put differently, the TNS is applied to linear combinations of the left and right channels, which has several advantages. Firstly, it may turn out in a given situation that TNS is only beneficial for, say, the downmix signal. Then, TNS filtering can be suppressed or omitted for the residual signal and, what may mean more economic use of the available bandwith, TNS filter coefficients need only be transmitted for the downmix signal. Secondly, the computation of the oversampled representation of the downmix signal (e.g., MDST data being derived from the MDCT data so as to form a complex frequency-domain representation), which is needed in complex prediction coding, may require that at time-domain representation of the downmix signal be computable. This in turn means that the downmix signal is preferably available as a time sequence of MDCT spectra obtained in a uniform manner. If the TNS filter were applied in the decoder after the upmix matrix, which converts a downmix/residual representation into a left/right representation, only a sequence of TNS residual MDCT spectra of the downmix signal would be available. This would make efficient calculation of the corresponding MDST spectra very challenging, especially if left and right channels were using TNS filters with different characteristics.

It is emphasized that the availability of a time sequence of MDCT spectra is not an absolute criterion in order to obtain an MDST representation fit to serve as a basis for complex prediction coding. In addition to experimental evidence, this fact may be explained by the TNS being generally applied only to higher frequencies, such as above a few kilohertz, so that the residual signal filtered by TNS approximately corresponds to the non-filtered residual signal for lower frequencies. Thus, the invention may be embodied as a decoder

for complex-prediction stereo coding, in which the TNS filters have a different placement than upstream of the upmix stage, as indicated below.

In one embodiment, the decoder system includes at least one further TNS module located downstream of the upmix stage. By means of a selector arrangement, either the TNS module(s) upstream of the upmix stage or the TNS module(s) downstream of the upmix stage. Under certain circumstances, the computation of the complex frequency-domain representation does not require that a time-domain representation of the downmix signal be computable. Moreover, as set forth above, the decoder may be selectively operable in a direct or joint coding mode, not applying complex prediction coding, and then it may be more suitable to apply the conventional localization of the TNS modules, that is, as one of the last processing steps in the frequency domain.

In one embodiment, the decoder system is adapted to economize processing resources, and possibly energy, by deactivating the module for computing a second frequency-domain representation of the downmix signal when the latter is not necessary. It is supposed that the downmix signal is partitioned into successive time blocks, each of which is associated with a value of the complex prediction coefficient. This value may be determined by a decision taken for each time block by an encoder cooperating with the decoder. Furthermore, in this embodiment, the module for computing a second frequency-domain representation of the downmix signal is adapted to deactivate itself if, for a given time block, the absolute value of the imaginary part of the complex prediction coefficient is zero or is smaller than a predetermined tolerance. Deactivation of the module may imply that no second frequency-domain representation of the downmix signal is computed for this time block. If deactivation did not take place, the second frequency-domain representation (e.g., a set of MDST coefficients) would be multiplied by zero or by a number of substantially the same order of magnitude as the machine epsilon (round-off unit) of the decoder or some other suitable threshold value.

In a further development of the preceding embodiment, economization of processing resources is achieved on a sublevel of the time block into which the downmix signal is partitioned. For instance, such a sublevel within a time block may be a frequency band, wherein the encoder determines a value of

the complex prediction coefficient for each frequency band within a time block. Similarly, the module for producing a second frequency-domain representation is adapted to suppress its operation for a frequency band in a time block for which the complex prediction coefficient is zero or has magnitude less than a tolerance.

In one embodiment, the first spectral components are transform coefficients arranged in one or more time blocks of transform coefficients, each block generated by application of a transform to a time segment of a time-domain signal. Further, the module for computing a second frequency-domain representation of the downmix signal is adapted to:

- derive one or more first intermediate components from at least some of the first spectral components;
- form a combination of said one or more first spectral components according to at least a portion of one or more impulse responses to obtain one or more second intermediate components; and
- derive said one or more second spectral components from said one or more second intermediate components.

This procedure achieves a computation of the second frequency-domain representation directly from the first frequency-domain representation, as described in greater detail in US 6,980,933 B2, notably columns 8–28 and in particular equation 41 therein. As the skilled person realizes, the computation is not performed via the time domain, as opposed to, e.g., inverse transformation followed by a different transformation.

For an exemplary implementation of complex-prediction stereo coding according to the invention, it has been estimated that the computational complexity increases only slightly (significantly less than the increase caused by complex-prediction stereo coding in the QMF domain) compared to traditional L/R or M/S stereo. An embodiment of this type including exact computation of the second spectral components introduces a delay that is typically only a few per cent longer than that introduced by a QMF-based implementation (assuming the time block length to be 1024 samples and comparing with the delay of the hybrid QMF analysis/synthesis filter bank, which is 961 samples).

2016222372 31 Aug 2016

Suitably, in at least some of the previous embodiment, the impulse responses are adapted to the transform by which the first frequency-domain representation is obtainable, and more precisely in accordance with the frequency response characteristics thereof.

In some embodiments, the first frequency-domain representation of the downmix signal is obtained by a transform which is being applied in connection with one or more analysis window functions (or cut-off functions, e.g., rectangular window, sine window, Kaiser-Bessel-derived window, etc.), one aim of which is to achieve a temporal segmentation without introducing a harmful amount of noise or changing the spectrum in an undesirable manner. Possibly, such window functions are partially overlapping. Then, preferably, the frequency response characteristics of the transform are dependent on characteristics of said one or more analysis window functions.

Still referring to the embodiments featuring computation of the second frequency-domain representation within the frequency domain, it is possible to decrease the computational load involved by using an approximate second frequency-domain representation. Such approximation may be achieved by not requiring complete information on which to base the computation. By the teachings of US 6,980,933 B2, for instance, first frequency-domain data from three time blocks are required for exact calculation of the second frequency-domain representation of the downmix signal in one block, namely a block contemporaneous with the output block, a preceding block and a subsequent block. For the purpose of complex prediction coding according to the present invention, suitable approximations may be obtained by omitting – or replacing by zero – data emanating from the subsequent block (whereby operation of the module may become causal, that is, does not contribute a delay) and/or from the preceding block, so that the computation of the second frequency-domain representation is based on data from one or two time blocks only. It is noted that even though the omission of input data may imply a rescaling of the second frequency-domain representation – in the sense that, e.g., it no longer represents equal power – it can yet be used as a basis for complex prediction coding as long as it is computed in an equivalent manner at both the encoder and decoder ends, as noted above. Indeed, a possible rescaling

2016222372 31 Aug 2016

of this kind will be compensated by a corresponding change of the prediction coefficient value.

Yet another approximate method for computing a spectral component forming part of the second frequency-domain representation of the downmix signal may include combination of at least two components from the first frequency-domain representation. The latter components may be adjacent with respect to time and/or frequency. As alternative, they may be combined by finite impulse response (FIR) filtering, with relatively few taps. For example, in a system applying a time block size of 1024, such FIR filters may include 2, 3, 4 etc. taps. Descriptions of approximate computation methods of this nature may be found , e.g., in US 2005/0197831 A1. If a window function giving relatively smaller weights to the neighborhood of each time block boundary is used, e.g., a non-rectangular function, it may be expedient to base the second spectral components in a time block only on combinations of first spectral components in the same time block, implying that not the same amount of information is available for the outermost components. The approximation error possibly introduced by such practice is to some extent suppressed or concealed by the shape of the window function.

In one embodiment of a decoder, which is designed to output a time-domain stereo signal, there is included a possibility of switching between direct or joint stereo coding and complex prediction coding. This is achieved by the provision of:

- a switch that is selectively operable either as a pass-through stage (not modifying the signals) or as a sum-and-difference transform;
- an inverse transform stage for performing a frequency-to-time transform; and
- a selector arrangement for feeding the inverse transform stage with either a directly (or jointly) coded signal or with a signal coded by complex prediction.

As the skilled person realizes, such flexibility on the part of the decoder gives the encoder latitude to choose between conventional direct or joint coding and complex prediction coding. Hence, in cases where the level of quality of conventional direct L/R stereo coding or joint M/S stereo coding cannot be

2016222372 31 Aug 2016

surpassed, this embodiment can at least guarantee that the same level is maintained. Thus, the decoder according to this embodiment may be regarded as a superset with respect to the related art.

Another group of embodiments of the decoder system effect computation of the second spectral components in the second frequency-domain representation via the time domain. More precisely, an inverse of the transform by which the first spectral components were obtained (or are obtainable) is applied and is followed by a different transform having as output the second spectral components. In particular, an inverse MDCT may be followed by a MDST. In order to reduce the number of transforms and inverse transforms, the output of the inverse MDCT may, in such an embodiment, be fed to both the MDST and to the output terminals (possibly preceded by further processing steps) of the decoding system.

For an exemplary implementation of complex-prediction stereo coding according to the invention, it has been estimated that the computational complexity increases only slightly (still significantly less than the increase caused by complex-prediction stereo coding in the QMF domain) compared to traditional L/R or M/S stereo.

As a further development of the embodiment referred to in the preceding paragraph, the upmix stage may comprise a further inverse transform stage for processing the side signal. Then, the sum-and-difference stage is supplied with a time-domain representation of the side signal, generated by said further inverse transform stage, and a time-domain representation of the downmix signal, generated by the inverse transform stage already referred to. It is recalled that, advantageously from the point of view of computational complexity, the latter signal is supplied to both the sum-and-difference stage and said different transform stage referred to above.

In one embodiment, a decoder designed to output a time-domain stereo signal includes a possibility of switching between direct L/R stereo coding or joint M/S stereo coding and complex prediction stereo coding. This is achieved by the provision of:

- a switch operable either as a pass-through stage or as a sum-and-difference stage;

2016222372 31 Aug 2016

- a further inverse transform stage for computing a time-domain representation of the side signal;
- a selector arrangement for connecting the inverse transform stages to either a further sum-and-difference stage connected to a point upstream of the upmix stage and downstream of the switch (preferably when the switch has been actuated to function as a pass filter, as may be the case in decoding a stereo signal generated by complex prediction coding) or a combination of a downmix signal from the switch and a side signal from the weighted summer (preferably when the switch has been actuated to function as a sum-and-difference stage, as may be the case in decoding a directly coded stereo signal).

As the skilled person realizes, this gives the encoder latitude to choose between conventional direct or joint coding and complex prediction coding, which means that a level of quality at least equivalent to that of direct or joint stereo coding can be guaranteed.

In one embodiment, of the encoder system according to the second aspect of the invention may comprise an estimator for estimating the complex prediction coefficient with the aim of reducing or minimizing the signal power or average signal power of the residual signal. The minimization may take place over a time interval, preferably a time segment or time block or time frame of the signal to be encoded. The square of the amplitude may be taken as a measure of the momentary signal power, and an integral over a time interval of the squared amplitude (waveform) may be taken as a measure of the average signal power in that interval. Suitably, the complex prediction coefficient is determined on a time-block and frequency-band basis, that is, its value is set in such manner that it reduces the average power (i.e., total energy) of the residual signal in that time block and frequency band. In particular, modules for estimating parametric stereo coding parameters such as IID, ICC and IPD or similar ones, may provide output on which the complex prediction coefficient can be computed according to mathematical relations known to the skilled person.

In one embodiment, the coding stage of the encoder system is operable, further, to function as pass-through stage so as to enable direct stereo

2016222372 31 Aug 2016

coding. By selecting direct stereo coding in situations where this is expected to provide a higher quality, the encoder system can guarantee that the coded stereo signal has at least the same quality as in direct coding. Similarly, in situations where the greater computational effort incurred by complex prediction coding is not motivated by a significant quality increase, an option of economizing computational resources is thus readily available to the encoder system. The decision between joint, direct, real-prediction and complex-prediction coding in the coder is generally based on a rate/distortion optimization rationale.

In one embodiment, the encoder system may comprise a module for computing a second frequency-domain representation directly (that is, without applying an inverse transform into the time domain and without using the time-domain data of the signal) based on the first spectral components. In relation to the corresponding embodiments of the decoder system described above, this module may have an analogous structure, namely comprise the analogous processing operations but in a different order, so that the encoder is adapted to output data suitable as input on the decoder side. For the purposes of illustrating this embodiment, it is assumed that the stereo signal to be encoded comprises mid and side channels, or has been transformed into this structure, and the coding stage is adapted to receive a first frequency-domain representation. The coding stage comprises a module for computing a second frequency-domain representation of the mid channel. (The first and second frequency-domain representations referred to here are as defined above; in particular the first frequency-domain representations may MDCT representations and the second frequency-domain representation may be an MDST representation.) The coding stage further comprises a weighted summer for computing a residual signal as a linear combination formed from the side signal and the two frequency-domain representations of the mid signal weighted by the real and imaginary parts, respectively, of the complex prediction coefficient. The mid signal, or suitably the first frequency-domain representation thereof, may be used directly as a downmix signal. In this embodiment, further, the estimator determines the value of the complex prediction coefficient with the aim of minimizing the power or average power of the resi-

2016222372 31 Aug 2016

dual signal. The final operation (optimization) may be effected either by feedback control, wherein the estimator may receive the residual signal obtained by current prediction coefficient values to be adjusted further if needed, or, in a feed-forward manner, by computations effected directly on the left/right channels of an original stereo signal or the mid/side channels. The feed-forward method is preferred, by which the complex prediction coefficient is determined directly (particularly, in a non-iterative or non-feedback manner) based on the first and second frequency-domain representations of the mid signal and the first frequency-domain representation of the side signal. It is noted that the determination of the complex prediction coefficient may be followed by a decision whether to apply direct, joint, real-prediction or complex-prediction coding, wherein the resulting quality (preferably the perceptual quality, taking into account, e.g., signal-to-mask effects) of each available option is considered; thus the statements above are not to be construed to the effect that no feedback mechanism exists in the encoder.

In one embodiment, the encoder system comprises modules for computing a second frequency-domain representation of the mid (or downmix) signal via the time domain. It is understood that implementation details relating to this embodiment, at least as far as the computation of the second frequency-domain representation is concerned, are similar or can be worked out analogously to corresponding decoder embodiments. In this embodiment, the coding stage comprises:

- a sum-and-difference stage for converting the stereo signal into a form comprising mid and side channels;
- a transform stage for providing a frequency-domain representation of the side channel and a complex-valued (and hence oversampled) frequency-domain representation of the mid channel; and
- a weighted summer for computing a residual signal, wherein the complex prediction coefficient is used as a weight.

Here, the estimator may receive the residual signal and determine, possibly in a feedback control fashion, the complex prediction coefficient so as to reduce or minimize the power or average of the residual signal. Preferably, however, the estimator receives the stereo signal to be encoded and determines the

2016222372 31 Aug 2016

prediction coefficient on the basis of this. It is advantageous from the point of view of computational economy to use a critically sampled frequency-domain representation of the side channel, as the latter will not be subjected to multiplication by a complex number in this embodiment. Suitably, the transform stage may comprise an MDCT stage and an MDST stage arranged in parallel, both having the time-domain representation of the mid channel as input. Thus, an oversampled frequency-domain representation of the mid channel and a critically sampled frequency-domain representation of the side channel are produced.

It is noted that the methods and apparatus disclosed in this section may be applied, after appropriate modifications within the skilled person's abilities including routine experimentation, to coding of signals having more than two channels. The modifications into such multi-channel operability may proceed, e.g., along the lines of sections 4 and 5 in the paper by J. Herre et al. cited above.

Features from two or more embodiments outlined above can be combined, unless they are clearly complementary, in further embodiments. The fact that two features are recited in different claim does not preclude that they can be combined to advantage. Likewise, further embodiments can also be provided the omission of certain features that are not necessary or not essential for the desired purpose. As one example, the decoding system according to the invention may be embodied without a dequantization stage in cases where the coded signal to be processed is not quantized or is already available in a form suitable for processing by the upmix stage.

Brief description of the drawings

The invention will now be further illustrated by the embodiments described in the next section, reference being made to the accompanying drawings, on which:

figure 1 consists of two generalized block diagrams showing QMF-based decoders according to background art;

figure 2 is a generalized block diagram of an MDCT-based stereo decoder system with complex prediction, according to an embodiment of the

present invention, in which the complex representation of a channel of the signal to be decoded is computed in the frequency domain;

figure 3 is a generalized block diagram of an MDCT-based stereo decoder system with complex prediction, according to an embodiment of the present invention, in which the complex representation of a channel of the signal to be decoded is computed in the time domain;

figure 4 shows an alternative embodiment of the decoder system of figure 2, in which the location of the active TNS stage is selectable;

figure 5 comprises generalized block diagrams showing MDCT-based stereo encoder systems with complex prediction, according to embodiments of another aspect of the present invention;

figure 6 is a generalized block diagram of an MDCT-based stereo encoder with complex prediction, according to an embodiment of the invention, in which a complex representation of a channel of the signal to be encoded is computed on the basis of the time-domain representation thereof;

figure 7 shows an alternative embodiment of the encoder system of figure 6, which is operable also in a direct L/R coding mode;

figure 8 is a generalized block diagram of an MDCT-based stereo encoder system with complex prediction, according to an embodiment of the invention, in which a complex representation of a channel of the signal to be encoded is computed on the basis of a first frequency-domain representation thereof, which decoder system is operable also in a direct L/R coding mode;

figure 9 shows an alternative embodiment of the encoder system of figure 7, which further includes a TNS stage arranged downstream of the coding stage;

figure 10 shows alternative embodiments of the portion labeled A in figures 2 and 8;

figure 11 is shows an alternative embodiment of the encoder system of figure 8, which further includes two frequency-domain modifying devices respectively arranged downstream and upstream of the coding stage;

figure 12 is a graphical presentation of listening test results at 96 kb/s from six subjects showing different complexity–quality trade-off options for the computation or approximation of the MDST spectrum, wherein data points

2016222372 31 Aug 2016

labeled "+" refer to hidden reference, "×" refer to 3.5 kHz band-limited anchor, "✳" refer to USAC traditional stereo (M/S or L/R), "□" refer to MDCT-domain unified stereo coding by complex prediction with imaginary part of prediction coefficient disabled (i.e., real-valued prediction, requiring no MDST), "■" refer to MDCT-domain unified stereo coding by complex prediction using a current MDCT frame to compute an approximation of the MDST, "○" refer to MDCT-domain unified stereo coding by complex prediction using current and previous MDCT frames to compute an approximation of the MDST and "●" refer to MDCT-domain unified stereo coding by complex prediction using current, previous and next MDCT frames to compute the MDST;

figure 13 presents the data of figure 12, however as differential scores relative to MDCT-domain unified stereo coding by complex prediction using a current MDCT frame to compute an approximation of the MDST;

figure 14 comprises generalized block diagrams showing three embodiments of a decoder system according to embodiments of the invention;

figure 15 is a flowchart showing a decoding method according to an embodiment of the invention; and

figure 16 is a flowchart showing an encoding method according to an embodiment of the invention.

Detailed description of embodiments

I. Decoder systems

Figure 2 shows, in the form of a generalized block diagram, a decoding system for decoding a bit stream comprising at least one value of a complex prediction coefficient $\alpha = \alpha_R + i\alpha_I$ and an MDCT representation of a stereo signal having downmix M and residual D channels. The real and imaginary parts α_R, α_I of the prediction coefficient may have been quantized and/or coded jointly. Preferably however, the real and imaginary parts are quantized independently and uniformly, typically with a step size of 0.1 (dimensionless number). The frequency-band resolution used for the complex prediction coefficient is not necessarily the same as the resolution for scale factors bands (*sfb*; i.e., a group of MDCT lines that are using the same MDCT quantization step size and quantization range) according to the MPEG standard. In

2016222372 31 Aug 2016

particular, the frequency-band resolution for the prediction coefficient may be one that is psycho-acoustically justified, such as the Bark scale. A demultiplexer 201 is adapted to extract these MDCT representations and the prediction coefficient (part of *Control information* as indicated in the figure) from the bit stream that is supplied to it. Indeed, more control information than merely the complex prediction coefficient may be encoded in the bit stream, e.g., instructions whether the bit stream is to be decoded in prediction or non-prediction mode, TNS information, etc. TNS information may include values of the TNS parameters to be applied by the TNS (synthesis) filters of the decoder system. If identical sets of TNS parameters are to be used for several TNS filters, such as for both channels, it is economical receive this information in the form of a bit indicating such identity of the parameter sets rather than receiving the two sets of parameters independently. Information may also be included whether to apply TNS before or after the upmix stage, as appropriate based on, e.g., a psycho-acoustic evaluation of the two available options. Moreover, then control information may indicate individually limited bandwidths for the downmix and residual signals. For each channel, frequency bands above a bandwidth limit will not be decoded but will be set to zero. In certain cases, the highest frequency bands have so small energy content that they are already quantized down to zero. Normal practice (cf. the parameter *max_sfb* in the MPEG standard) has been to use the same bandwidth limitation for both the downmix and residual signals. However, the residual signal, to a greater extent than the downmix signal, has its energy content localized to lower frequency bands. Therefore, by placing a dedicated upper bandwidth limit on the residual signal, a bit-rate reduction is possible at no significant loss of quality. For instance, this may be governed by two independent *max_sfb* parameters encoded in the bit stream, one for the downmix signal and one for the residual signal.

In this embodiment, the MDCT representation of the stereo signal is segmented into successive time frames (or time blocks) comprising a fixed number of data points (e.g., 1024 points), one of several fixed numbers of data points (e.g., 128 or 1024 points) or a variable number of points. As is known to those skilled in the art, the MDCT is critically sampled. The output of

2016222372 31 Aug 2016

the decoding system, indicated in the right part of the drawing, is a time-domain stereo signal having left L and right R channels. Dequantization modules 202 are adapted to handle the bit stream input to the decoding system or, where appropriate, two bit streams obtained after demultiplexing of an original bit stream and corresponding to each of the downmix and residual channels. The dequantized channel signals are provided to a switching assembly 203 operable either in a pass-through mode or a sum-and-difference mode corresponding to the respective transformation matrices

$$\begin{bmatrix} 1 & 0 \\ 0 & 1 \end{bmatrix}$$

and

$$\frac{1}{2}\begin{bmatrix} 1 & 1 \\ 1 & -1 \end{bmatrix}.$$

As will be further discussed in the next paragraph, the decoder system includes a second switching assembly 205. Both switching assemblies 203, 205, like most other switches and switching assemblies in this embodiment and the embodiments to be described, are operable in a frequency-selective fashion. This enables decoding of a large variety of decoding modes, e.g., decoding frequency-dependent L/R or M/S decoding, as known in the related art. Hence, the decoder according to the invention can be regarded as a superset in relation to the related art.

Assuming for now that the switching assembly 203 is in the pass-through mode, the dequantized channel signals are passed, in this embodiment, through respective TNS filters 204. The TNS filters 204 are not essential to the operation of the decoding system and may be replaced by pass-through elements. After this, the signal is supplied to the second switching assembly 205 having the same functionality as the switching assembly 203 located upstream. With inputs signals as previously described and with the second switching assembly 205 set in its pass-through mode is, the output of the former is the downmix channel signal and the residual channel signal. The downmix signal, still represented by its time-successive MDCT spectra, is supplied to a real-to-imaginary transform 206 adapted to compute, based thereon, MDST spectra of the downmix signal. In this embodiment, one MDST frame is based on three MDCT frames, one previous frame, one current (or contemporaneous) frame and one subsequent frame. It is indicated

2016222372 31 Aug 2016

symbolically (Z^{-1}, Z) that the input side of the real-to-imaginary transform 206 comprises delay components.

The MDST representation of the downmix signal obtained from the real-to-imaginary transform 206 is weighted by the imaginary part α_I of the prediction coefficient and is added to the MDCT representation of the downmix signal weighted by the real part α_R of the prediction coefficient and the MDCT representation of the residual signal. The two additions and multiplications are performed by multipliers and adders 210, 211, together forming (functionally) a weighted adder, which are supplied with the value of the complex prediction coefficient α encoded in the bit stream initially received by the decoder system. The complex prediction coefficient may be determined once for every time frame. It may also be determined more often, such as once for every frequency band within a frame, the frequency bands being a psychoacoustically motivated partition. It may also be determined less frequently, as will be discussed below in connection with encoding systems according to the invention. The real-to-imaginary transform 206 is synchronized with the weighted adder in such manner that a current MDST frame of the downmix channel signal is combined with one contemporaneous MDCT frames of each of the downmix channel signal and the residual channel signal. The sum of these three signals is a side signal $S = \mathrm{Re}\{\alpha M\} + D$. In this expression, M includes both the MDCT and MDST representations of the downmix signal, namely $M = M_{MDCT} - iM_{MDST}$, whereas $D = D_{MDCT}$ is real-valued. Thus, a stereo signal having a downmix channel and a side channel is obtained, from which a sum-and-difference transform 207 restores the left and right channels as follows:

$$\begin{cases} L = M + S \\ R = M - S \end{cases}$$

These signals are represented in the MDCT domain. The last step of the decoding system is to apply an inverse MDCT 209 to each of the channels, whereby a time-domain representation of the left/right stereo signal is obtained.

A possible implementation of the real-to-imaginary transform 206 is further described in applicant's patent US 6,980,933 B2, as noted above. By

formula 41 therein, the transform can be expressed as a finite impulse-response filter, e.g., for even points,

$$S(2v) = \frac{2}{N}\sum_{p=0}^{N-1}[(-1)^{p+1}X_I(p) + X_{III}(p)]h_{I,III}(2v-p) + \frac{4}{N}\sum_{l=0}^{N-1}X_{II}(2l+1)h_{II}(2v-2l-1),$$

where $S(2v)$ is the $2v^{\text{th}}$ MDST data point, X_I, X_{II}, X_{III} are the MDCT data from each of the frames and N is the frame length. Further, $h_{I,III}, h_{II}$ are impulse responses depending on the window function applied, and are therefore determined for each choice of window function, such as rectangular, sinusoidal and Kaiser-Bessel-derived, and for each frame length. The complexity of this computation may be reduced by omitting those impulse responses which have a relatively smaller energy content and contribute relatively less to the MDST data. As an alternative or extension to this simplification, the impulse responses themselves may be shortened, e.g., from the full frame length N to smaller number of points. As an example, the impulse response length may be decreased from 1024 points (taps) to 10 points. The most extreme truncation that can still be considered meaningful is

$$S(v) = X_{II}(v+1) - X_{II}(v-1).$$

Other straightforward approaches can be found in US 2005/0197831 A1.

It is further possible to reduce the amount of input data on which the computation is based. To illustrate, the real-to-imaginary transform 206 and its upstream connections, which are indicated as a portion denoted by "A" on the drawing, be replaced by a simplified variant, two of which A' and A" are shown in figure 10. The variant A' provides an approximate imaginary representation of the signal. Here, the MDST computation only takes the current and the previous frame into account. With reference to the formula above in this paragraph, this may be effected by setting $X_{III}(p) = 0$ for $p = 0, \ldots, N-1$ (index III denotes the subsequent time frame). Because the variant A' does not require MDCT spectrum of the subsequent frame as input, the MDST calculation does not incur any time delay. Clearly, this approximation somewhat reduces the accuracy of the MDST signal obtained, but may also imply that

2016222372 31 Aug 2016

the energy of this signal becomes reduced; the latter fact can be fully compensated by an increase in α_I as a result of the nature of prediction coding.

Also shown in figure 10 is the variant A", which uses as input only the MDCT data for the current time frame. Variant A" arguably produces a less accurate MDST representation than variant A'. On the other hand, it operates at zero delay, just like variant A', and has lower computational complexity. As already mentioned, the waveform coding properties are not affected as long as the same approximation is used in the encoder system and the decoder system.

It is to be noted, irrespective of whether variant A, A' or A" or any further development thereof is used, that only those portions of the MDST spectrum need to be computed for which the imaginary part of the complex prediction coefficient is non-zero, $\alpha_I \neq 0$. In practical circumstances this will be taken to mean that the absolute value $|\alpha_I|$ of the imaginary part of the coefficient is greater than a predetermined threshold value, which may be related to the unit round-off of the hardware used. In case the imaginary part of the coefficient is zero for all frequency bands within a time frame, there is no need to compute any MDST data for that frame. Thus, suitably, the real-to-imaginary transform 206 is adapted to respond to occurrences of very small $|\alpha_I|$ values by not generating MDST output, whereby computing resources can be economized. In embodiments where more frames than the current one are used to produce one frame of MDST data, however, any units upstream of the transform 206 should suitably continue operating even though no MDST spectrum is needed – in particular, the second switching assembly 205 should keep forwarding MDCT spectra – so that sufficient input data are already available to the real-to-imaginary transform 206 already when the next time frame associated with a non-zero prediction coefficient occurs; this may of course be the next time block.

Returning to figure 2, the function of the decoding system has been described under the assumption of both switching assemblies 203, 205 being set in their respective pass-through modes. As will be discussed now, the decoder system can as well decode signals that are not prediction coded. For this use, the second switching assembly 205 will be set in its sum-and-

2016222372 31 Aug 2016

difference mode and suitably, as indicated on the drawing, a selector arrangement 208 will be set in its lower position, thereby ensuring that signals are fed directly to the inverse transform 209 from a source point between the TNS filters 204 and the second switching assembly 205. To ensure correct decoding, the signal suitably has L/R form at the source point. Therefore, to ensure that the real-to-imaginary transform is supplied with the correct mid (i.e., downmix) signal at all times (rather than, say, intermittently by a left signal), the second switching assembly 205 is preferably set in its sum-and-difference mode during decoding of a non-prediction-coded stereo signal. As noted above, prediction coding may be replaced by conventional direct or joint coding for certain frames based on, e.g., a data rate-to-audio quality decision. The outcome of such decision may be communicated from the encoder to the decoder in various ways, e.g., by the value of a dedicated indicator bit in each frame, or by the absence or presence of a value of the prediction coefficient. Having established these facts, the role of the first switching assembly 203 can be easily realized. Indeed, in non-prediction coding mode, the decoder system can process both signals according to direct (L/R) stereo coding or joint (M/S) coding, and by operating the first switching assembly 203 either in pass-through or sum-and-difference mode, it is possible to ensure that the source point is always provided with a directly coded signal. Clearly, the switching assembly 203 when functioning as sum-and-difference stage will convert an input signal in M/S form into an output signal (supplied to the optional TNS filters 204) in L/R form.

The decoder system receives a signal whether a particular time frame is to be decoded by the decoder system in prediction-coding or non-prediction-coding mode. Non-prediction mode may be signaled by the value of a dedicated indicator bit in each frame or by the absence (or the value zero) of the prediction coefficient. Prediction mode may be communicated analogously. A particularly advantageous implementation, which enables fallback without any overhead, makes use of a reserved fourth value of the two-bit field *ms_mask_present* (see MPEG-2 AAC, document ISO/IEC 13818-7), which is transmitted per time frame and defined as follows:

Table 1: Definition of *ms_mask_present* in USAC	
Value	**Meaning**
00	L/R coding for all frequency bands
01	one signaling bit per band is used to indicate L/R or M/S
10	M/S coding for all frequency bands
11	reserved

By redefining the value 11 to mean "complex prediction coding", the decoder can be operated in all legacy modes, particularly M/S and L/R coding, without any bit-rate penalty and is yet able to receive a signal indicating complex prediction coding mode for the relevant frames.

Figure 4 shows a decoder system of the same general structure as the one shown in figure 2 but including, however, at least two different structures. Firstly, the system of figure 4 includes switches 404, 411 enabling the application of some processing step involving frequency-domain modification upstream and/or downstream of the upmix stage. This is achieved, on the one hand, by a first set of frequency-domain modifiers 403 (drawn as TNS synthesis filters in this figure) provided together with the first switch 404 downstream of dequantization modules 401 and a first switching assembly 402 but upstream of a second switching assembly 405 arranged immediately upstream of the upmix stage 406, 407, 408, 409. On the other hand, the decoder system includes a second set of frequency-domain modifiers 410 provided together with a second switch 411 downstream of the upmix stage 406, 407, 408, 409 but upstream of an inverse transform stage 412. Advantageously, as indicated on the drawing, each frequency-domain modifier is arranged in parallel with a pass-through line which is connected upstream to the input side of the frequency-domain modifier and is connected downstream to the associated switch. By virtue of this structure, the frequency-domain modifier is supplied with the signal data at all times, enabling processing in the frequency domain based on more time frames than the current one only. The decision whether to apply the first 403 or second sets of frequency-domain modifiers 410 may be taken by the encoder (and conveyed in the bit stream), or may be based on whether prediction coding is applied, or may be based on some

2016222372 31 Aug 2016

other criterion found suitable in practical circumstances. As an example, if the frequency-domain modifier are TNS filters, then the first set 403 may be advantageous to use for some kinds of signals, while the second set 410 may be advantageous for other kinds of signals. If the outcome of this selection is encoded in the bit stream, then the decoder system will activate the respective set of TNS filters accordingly.

To facilitate understanding of the decoder system shown in figure 4, it is explicitly noted that decoding of a directly (L/R) coded signal takes place when $\alpha = 0$ (implying that pseudo-L/R and L/R are identical and that the side and residual channels do not differ), the first switching assembly 402 is in the pass mode, the second switching assembly is in the sum-and-difference mode, thereby causing the signal to have M/S form between the second switching assembly 405 and a sum-and-difference stage 409 of the upmix stage. Because the upmix stage will then effectively be a pass-through step, it is immaterial whether (using the respective switches 404, 411) the first or second set frequency-domain modifiers is activated.

Figure 3 illustrates a decoder system according to an embodiment of the invention which, in relation to those of figures 2 and 4, represents a different approach to the provision of MDST data required for the upmixing. Like the decoder systems already described, the system of figure 3 comprises dequantization modules 301, a first switching assembly 302 operable in either a pass-through or sum-and-difference mode and TNS (synthesis) filters 303, which are all serially arranged from the input end of the decoder system. Modules downstream of this point are selectively utilized by means of two second switches 305, 310, which are preferably operated jointly so that both are either in their upper positions or lower positions, as indicated in the figure. At the output end of the decoder system, there are a sum-and-difference stage 312 and, immediately upstream thereof, two inverse MDCT modules 306, 311 for transforming an MDCT-domain representation of each channel into a time-domain representation.

In complex prediction decoding, wherein the decoder system is supplied with a bit stream encoding a downmix/residual stereo signal and values of a complex prediction coefficient, the first switching assembly 302 is set in

2016222372 31 Aug 2016

its pass-through mode and the second switches 305, 310 are set in the upper position. Downstream of the TNS filters, the two channels of the (dequantized, TNS-filtered, MDCT) stereo signal are processed in different ways. The downmix channel is provided, on the one hand, to a multiplier and summer 308, which adds the MDCT representation of the downmix channel weighted by the real part α_R of the prediction coefficient to the MDCT representation of the residual channel, and, on the other hand, to one 306 of the inverse MDCT transform modules. The time-domain representation of the downmix channel M, which is output from the inverse MDCT transform module 306, is supplied both to the final sum-and-difference stage 312 and to an MDST transform module 307. This double use of the time-domain representation of the downmix channel is advantageous from the point of view of computational complexity. The MDST representation of the downmix channel thus obtained is supplied to a further multiplier and summer 309, which after weighting by the imaginary part α_I of the prediction coefficient adds this signal to the linear combination output from the summer 308; hence, the output of the summer 309 is a side channel signal, $S = \mathrm{Re}\{\alpha M\} + D$. Similarly to the decoder system shown in figure 2, the multipliers and summers 308, 309 may readily be combined to form a weighted multi-signal summer with inputs the MDCT and MDST representations of the downmix signal, the MDCT representation of the residual signal and the value of the complex prediction coefficient. Downstream of this point in the present embodiment, only a passage through the inverse MDCT transform module 311 remains before the side channel signal is supplied to the final sum-and-difference stage 312.

The necessary synchronicity in the decoder system may be achieved by applying the same transform lengths and window shapes at both inverse MDCT transform modules 306, 311, as is already the practice in frequency-selective M/S and L/R coding. A one-frame delay is introduced by the combination of certain embodiments of the inverse MDCT module 306 and embodiments of the MDST module 307. Therefore, five optional delay blocks 313 (or software instructions to this effect in a computer implementation) are provided, so that the portion of the system located to the right of the dashed line can be delayed by one frame in relation to the left portion when necessary.

2016222372 31 Aug 2016

Apparently, all intersections between the dashed line and connection lines are provided with delay blocks, with the exception of the connection line between the inverse MDCT module 306 and the MDST transform module 307, which is where the delay arises that requires compensation.

The computation of MDST data for one time frame requires data from one frame of the time-domain representation. However, the inverse MDCT transform is based on one (current), two (preferably: previous and current) or three (preferably: previous, current and subsequent) consecutive frames. By virtue of the well-known time-domain alias cancellation (TDAC) associated with the MDCT, the three-frame option achieves complete overlap of the input frames and thus provides the best (and possibly perfect) accuracy, at least in frames containing time-domain alias. Clearly, the three-frame inverse MDCT operates at a one-frame delay. By accepting to use an approximate time-domain representation as input to the MDST transform, one may avoid this delay and thereby the need to compensate delays between different portions of the decoder system. In the two-frame option, the overlap/add enabling TDAC occurs in the earlier half of the frame, and alias may be present only in the later half. In the one-frame option, the absence of TDAC implies that alias may occur throughout the frame; however, an MDST representation achieved in this manner, and used as an intermediate signal in complex prediction coding, may still provide a satisfactory quality.

The decoding system illustrated in figure 3 may also be operated in two non-prediction decoding modes. For decoding a directly L/R coded stereo signal, the second switches 305, 310 are set in the lower position and the first switching assembly 302 is set in the pass-through mode. Thus, the signal has L/R form upstream of the sum-and-difference stage 304, which converts it into M/S form, upon which inverse MDCT transformation and a final sum-and-difference operation take place. For decoding a stereo signal provided in jointly M/S coded form, the first switching assembly 302 is instead set in its sum-and-difference mode, so that the signal has L/R form between the first switching assembly 302 and the sum-and-difference stage 304, which is often more suitable from the point of view of TNS filtering than an M/S form would be.

2016222372 31 Aug 2016

The processing downstream of the sum-and-difference stage 304 is identical to that in the case of direct L/R decoding.

Figure 14 consists of three generalized block diagrams of decoders according to embodiments of the invention. In contrast to several other block diagrams accompanying this application, a connection line in figure 14 may symbolize a multi-channel signal. In particular, such connection line may be arranged to transmit a stereo signal comprising left/right, mid/side, downmix/residual, pseudo-left/pseudo-right channels and other combinations.

Figure 14A shows a decoder system for decoding a frequency-domain representation (indicated, for the purpose of this figure, as an MDCT representation) of an input signal. The decoder system is adapted to supply as its output a time-domain representation of a stereo signal, which is generated on the basis of the input signal. To be able to decode an input signal coded by complex prediction stereo coding, the decoder system is provided with an upmix stage1410. However, it is also capable of handling an input signal encoded in other formats and possibly, that alternates between several coding formats over time, e.g., a sequence of time frames coded by complex prediction coding may be followed by a time portion coded by direct left/right coding. The decoder system's ability to handle different coding formats is achieved by the provision of a connection line (pass-through) arranged in parallel with said upmix stage 1410. By means of a switch 1411 it is possible to select whether the output from the upmix stage 1410 (lower switch position in figure) or the non-processed signal available over the connection line (upper switch position in figure) is to be supplied to the decoder modules arranged further downstream. In this embodiment, an inverse MDCT module 1412 is arranged downstream of the switch, which transforms an MDCT representation of a signal into a time-domain representation. As an example, the signal supplied to the upmix stage 1410 may be a stereo signal in downmix/residual form. The upmix stage 1410 then is adapted to derive a side signal and to perform a sum-and-difference operation so that a left/right stereo signal (in the MDCT domain) is output.

Figure 14B shows a decoder system similar to that of figure 14A. The present system is adapted to receive a bit stream at its input signal. The bit

2016222372 31 Aug 2016

stream is initially processed by a combined demultiplexer and dequantization module 1420, which provides, as a first output signal, an MDCT representation of a multi-channel stereo signal for further treatment, as determined by the position of a switch 1422 having analogous functionality as the switch 1411 of figure 14A. More precisely, the switch 1422 determines whether the first output from the demultiplexer and dequantization is to be processed by an upmix stage 1421 and an inverse MDCT module 1423 (lower position) or by the inverse MDCT module 1423 only (upper position). The combined demultiplexer and dequantization module 1420 outputs control information as well. In the present case, the control information associated with the stereo signal may include data indicating whether the upper or lower position of the switch 1422 is suitable for decoding the signal or, more abstractly, according to what coding format the stereo signal is to be decoded. The control information may also include parameters for adjusting the properties of the upmix stage 1421, e.g., a value of the complex prediction coefficient α used in complex prediction coding as already described above.

Figure 14C shows a decoder system which, in addition to the entities analogous to those in figure 14B, comprises first and second frequency-domain modifying devices 1431, 1435 respectively arranged upstream and downstream of an upmix stage 1433. For the purposes of this figure, each frequency-domain modifying device is illustrated by a TNS filter. However, by the term frequency-domain modifying device could also be understood other processes than TNS filtering that are susceptible of being applied either before or after the upmix stage. Examples of frequency-domain modifications include prediction, noise addition, bandwidth extension, and non-linear processing. Psychoacoustic considerations and similar reasons, which possibly include the properties of the signal to be processed and/or the configuration or settings of such a frequency-domain modifying device, sometimes indicate that it is advantageous to apply said frequency-domain modification upstream of the upmix stage 1433 rather than downstream. In other cases, it may be established by similar considerations that the downstream position of the frequency-domain modification is preferable to the upstream one. By means of switches 1432, 1436, the frequency-domain modifying devices

2016222372 31 Aug 2016

1431, 1435 may be selectively activated so that, responsive to control information, the decoder system can select the desired configuration. As an example, figure 14C shows an configuration in which the stereo signal from the combined demultiplexer and dequantization module 1430 is initially processed by the first frequency-domain modifying device 1431, is then supplied to the upmix stage 1433 and is finally forwarded directly an inverse MDCT module 1437, without passing through the second frequency-domain modifying device 1435. As explained in section *Summary,* this configuration is preferred over the option of performing TNS after upmixing in complex prediction coding.

II. Encoder systems

An encoder system according to the invention will now be described with reference to figure 5, which is a generalized block diagram of an encoder system for encoding a left/right (L/R) stereo signal as an output bit stream by complex prediction coding. The encoder system receives a time-domain or frequency-domain representation of the signal and supplies this to both a downmix stage and a prediction coefficient estimator. The real and imaginary parts of the prediction coefficients are provided to the downmix stage in order to govern the conversion of the left and right channels into downmix and residual channels, which are then supplied to a final multiplexer MUX. If the signal was not supplied as a frequency-domain representation to the encoder, it is transformed into such representation in the downmix stage or multiplexer.

One of the principles in prediction coding is to convert the left/right signal to mid/side form, that is,

$$\begin{cases} M = (L+R)/2 \\ S = (L-R)/2 \end{cases}$$

and then to make use of the remaining correlation between these channels, namely by setting

$$S = \mathrm{Re}\{\alpha M\} + D,$$

where α is the complex prediction coefficient to be determined and D is the residual signal. It is possible to choose α in order that the energy of the residual signal $D = S - \mathrm{Re}\{\alpha M\}$ is minimized. Energy minimization may be effected with respect to the momentary power, a shorter- or longer-term energy

2016222372 31 Aug 2016

(power average), which in the case of a discrete signal amounts to optimization in the mean-square sense.

The real and imaginary parts α_R, α_I of the prediction coefficient may be quantized and/or coded jointly. Preferably however, the real and imaginary parts are quantized independently and uniformly, typically with a step size of 0.1 (dimensionless number). The frequency-band resolution used for the complex prediction coefficient is not necessarily the same as the resolution for scale factors bands (*sfb*; i.e., a group of MDCT lines that are using the same MDCT quantization step size and quantization range) according to the MPEG standard. In particular, the frequency-band resolution for the prediction coefficient may be one that is psycho-acoustically justified, such as the Bark scale. It is noted that the frequency-band resolution may vary in cases the transform length varies.

As noted already, the encoder system according to the invention may have a latitude whether to apply prediction stereo coding or not, the latter case implying a fall-back to L/R or M/S coding. Such decision may be taken on a time-frame basis or finer, on a frequency-band basis within a time frame. As noted above, a negative outcome of the decision may be communicated to the decoding entity in various ways, e.g., by the value of a dedicated indicator bit in each frame, or by the absence (or zero value) of a value of the prediction coefficient. A positive decision may be communicated analogously. A particularly advantageous implementation, which enables fallback without any overhead, makes use of a reserved fourth value of the two-bit field *ms_mask_present* (see MPEG-2 AAC, document ISO/IEC 131818-7), which is transmitted per time frame and defined as follows:

Table 1: Definition of *ms_mask_present* in USAC

Value	**Meaning**
00	L/R coding for all frequency bands
01	one signaling bit per band is used to indicate L/R or M/S
10	M/S coding for all frequency bands
11	reserved

2016222372 31 Aug 2016

By redefining the value 11 to mean "complex prediction coding", the encoder can be operated in all legacy modes, particularly M/S and L/R coding, without any bit-rate penalty and is yet able to signal complex prediction coding for those frames where it is advantageous.

The substantive decision may be based on a data rate-to-audio quality rationale. As a quality measure, data obtained using a psychoacoustic model included in the encoder (as is often the case of available MDCT-based audio encoders) may be used. In particular, some embodiments of the encoder provides a rate-distortion optimized selection of the prediction coefficient. Accordingly, in such embodiments, the imaginary part – and possibly the real part too – of the prediction coefficient is set to zero if the increase in prediction gain does not economize enough bits for the coding of the residual signal to justify spending the bits required for coding the prediction coefficient.

Embodiments of the encoder may encode information relating to TNS in the bit stream. Such information may include values of the TNS parameters to be applied by the TNS (synthesis) filters on the decoder side. If identical sets of TNS parameters are to be used for both channels, it is economical to include a signaling bit indicating this identity of the parameter sets rather than to transmit the two sets of parameters independently. Information may also be included whether to apply TNS before or after the upmix stage, as appropriate based on, e.g., a psychoacoustic evaluation of the two available options.

As yet another optional feature, which is potentially beneficial from a complexity and bit-rate point of view, the encoder may be adapted to use an individually limited bandwidth for the encoding of the residual signal. Frequency bands above this limit will not be transmitted to the decoder but will be set to zero. In certain cases, the highest frequency bands have so small energy content that they are already quantized down to zero. Normal practice (cf. the parameter *max_sfb* in the MPEG standard) has entailed using the same bandwidth limitation for both the downmix and residual signals. Now, the inventors have found empirically that the residual signal, to a greater extent than the downmix signal, has its energy content localized to lower frequency bands. Therefore, by placing a dedicated upper band-with limit on the residual signal, a bit-rate reduction is possible at no significant loss of quality.

2016222372 31 Aug 2016

For instance, this may be achieved by transmitting two independent *max_sfb* parameters, one for the downmix signal and one for the residual signal.

It is pointed out that although the issues of optimal determination of the prediction coefficient, quantization and coding thereof, fallback to the M/S or L/R mode, TNS filtering and upper bandwidth limitation etc. were discussed with reference to the decoder system shown in figure 5, the same facts are equally applicable to the embodiments that will be disclosed in what follows with reference to the subsequent figures.

Figure 6 shows another encoder system according to the invention adapted to perform complex prediction stereo coding. The system receives as input a time-domain representation of a stereo signal segmented into successive, possibly overlapping, time frames and comprising left and right channels. A sum-and-difference stage 601 converts the signal into mid and side channels. The mid channel is supplied to both an MDCT module 602 and an MDST module 603, while the side channel is supplied to an MDCT module 604 only. A prediction coefficient estimator 605 estimates for each time frame – and possibly for individual frequency bands within a frame – a value of the complex prediction coefficient α as explained above. The value of the coefficient α is supplied as weight to weighted summers 606, 607, which form a residual signal D as a linear combination of the MDCT and MDST representations of the mid signal and the MDCT representation of the side signal. Preferably, the complex prediction coefficient is supplied to the weighted summers 606, 607 represented by the same quantization scheme which will be used when it is encoded into the bit stream; this obviously provides more faithful reconstruction, as both encoder and decoder applies the same value of the prediction coefficient. The residual signal, the mid signal (which may be more appropriately called downmix signal when it appears in combination with a residual signal) and the prediction coefficient are supplied to a combined quantization and multiplexer stage 608, which encodes these and possible additional information as an output bit stream.

Figure 7 shows a variation to the encoder system of figure 6. As is clear from the similarity of symbols in the figure, it has as similar structure but also the added functionality of operating in a direct L/R coding fallback mode.

2016222372 31 Aug 2016

The encoder system is actuated between the complex prediction coding mode and the fallback mode by means of a switch 710 provided immediately upstream of the combined quantization and multiplexer stage 709. In its upper position, as shown in the figure, the switch 710 will cause the encoder to operate in the fallback mode. From points immediately downstream of the MDCT modules 702, 704, the mid/side signal is supplied to a sum-and-difference stage 705, which after converting it into left/right form passes it on to the switch 710, which connects it to the combined quantization and multiplexer stage 709.

Figure 8 shows an encoder system according to the present invention. In contrast to the encoder systems of figures 6 and 7, this embodiment derives the MDST data required for the complex prediction coding directly from the MDCT data, that is, by a real-to-imaginary transform in the frequency domain. The real-to-imaginary transform applies any of the approaches discussed in connection with the decoder systems of figures 2 and 4. It is important to match the computation method of the decoder with that of the encoder, so that faithful decoding can be achieved; preferably, identical real-to-imaginary transform methods are used on the encoder side and the decoder side. As for the decoder embodiments, the portion A enclosed by a dashed line and comprising the real-to-imaginary transform 804 can be replaced by approximate variants or using fewer input time frames as input. Likewise, the coding may be simplified using any one of the other approximation approaches described above.

On a higher level, the encoder system of figure 8 has a structure differing from that which would probably follow by a straightforward action of replacing the MDST module in figure 7 by a (suitably connected) real-to-imaginary module. The present architecture is clean and achieves the functionality of switching between prediction coding and direct L/R coding in a robust and computationally economical manner. The input stereo signal is fed to MDCT transform modules 801, which output a frequency-domain representation of each channel. This is fed both to a final switch 808 for actuating the encoder system between its prediction and direct coding modes and to a sum-and-difference stage 802. In direct L/R coding or joint M/S coding –

2016222372 31 Aug 2016

which is carried out in time frame for which the prediction coefficient α is set to zero – this embodiment subjects the input signal to MDCT transformation, quantization and multiplexing only, the latter two steps being effected by a combined quantization and multiplexer stage 807 arranged at the output end of the system, where a bit stream is supplied. In prediction coding, each of the channels undergoes further processing between the sum-and-difference stage 802 and the switch 808. From the MDCT representation of the mid signal, the real-to-imaginary transform 804 derives MDST data and forwards these to both a prediction coefficient estimator 803 and a weighted summer 806. Like in the encoder systems shown in figures 6 and 7, a further weighted summer 805 is used to combine the side signal with weighted MDCT and MDST representations of the mid signal to form a residual channel signal, which is encoded together with the mid (i.e., downmix) channel signal and the prediction coefficient by the combined quantization and multiplexer module 807.

Turning now to figure 9, it will be illustrated that each of the embodiments of the encoder system may be combined with one or more TNS (analysis) filters. In accordance with the previous discussions, it is often advantageous to apply TNS filtering to the signal in its downmixed form. Hence, as shown in figure 9, the adaptation of the encoder system of figure 7 to include TNS is effected by adding TNS filters 911 immediately upstream of the combined quantization and multiplexer module 909.

Instead of the right/residual TNS filter 911 b, two separate TNS filters (not shown) may be provided immediately upstream of the portion of the switch 910 adapted to handle the right or residual channel. Thus, each of the two TNS filters will be supplied with the respective channel signal data at all times, enabling TNS filtering based on more time frames than the current one only. As has been already noted, TNS filters are but one example of frequency-domain modifying devices, notably devices basing their processing on more frame than the current one, which may benefit from such a placement as much as or more than at TNS filter does.

As another possible alternative to the embodiment shown in figure 9, TNS filters for selective activation can be arranged at more than one point for

2016222372 31 Aug 2016

each channel. This is similar to the structure of the decoder system shown in figure 4, where different sets of TNS filters can be connected by means of switches. This allows selection of the most suitable available stage for TNS filtering for each time frame. In particular, it may be advantageous to switch between different TNS locations in connection with switching between complex prediction stereo coding and other coding modes.

Figure 11 shows a variation based on the encoder system of figure 8, in which a second frequency-domain representation of the downmix signal is derived by means of a real-to-imaginary transform 1105. Similarly to the decoder system shown in figure 4, this encoder system also includes selectively activable frequency-domain modifier modules, one 1102 provided upstream of the downmix stage and one 1109 provided downstream thereof. The frequency-domain modules 1102, 1109, which have in this figure been exemplified by TNS filters, can be connected into each of the signal paths using the four switches 1103a, 1103b, 1109a and 1109b.

III. Non-apparatus embodiments

Embodiments of the third and a fourth aspects of the invention are shown in figures 15 and 16. Figure 15 shows a method for decoding a bit stream into a stereo signal, comprising the following steps:

1. A bit stream is input.
2. The bit stream is dequantized, whereby a first frequency-domain representation of downmix and residual channels of a stereo signal are obtained.
3. A second frequency-domain representation of the downmix channel is computed.
4. A side channel signal is computed on the basis of the three frequency-domain representations of channels.
5. A stereo signal, preferably in left/right form, is computed on the basis of the side and the downmix channels.
6. The stereo signal thus obtained is output.

Steps 3 through 5 may be regarded as a process of upmixing. Each of steps 1 through 6 is analogous to the corresponding functionality in any of the de-

2016222372 31 Aug 2016

coder systems disclosed in the preceding portions of this text, and further details relating to its implementation can be retrieved in the same portions.

Figure 16 shows a method for encoding a stereo signal as a bit stream signal, comprising the following steps:

1. A stereo signal is input.
2. The stereo signal is transformed into a first frequency-domain representation.
3. A complex prediction coefficient is determined.
4. The frequency-domain representation is downmixed.
5. The downmix and residual channels are encoded as a bit stream together with the complex prediction coefficient.
6. The bit stream is output.

Each of steps 1 through 5 is analogous to the corresponding functionality in any of the encoder systems disclosed in the preceding portions of this text, and further details relating to its implementation can be retrieved in the same portions.

Both methods may be expressed as computer-readable instructions in the form of software programs and may be executed by a computer. The scope of protection of this invention extends to such software and computer-program products for distributing such software.

IV. Empirical evaluation

Several of the embodiments disclosed herein have been empirically assessed. The most important portions of the experimental material obtained in this process will be summarized in this subsection.

The embodiment used for the experiments had the following characteristics:

(i) Each MDST spectrum (for a time frame) was computed by two-dimensional finite impulse response filtering from current, previous and next MDCT spectra.

(ii) A psychoacoustic model from USAC stereo encoder was used.

(iii) The real and imaginary parts of the complex prediction coefficient α were transmitted instead of the PS parameters ICC, CLD and IPD. The

2016222372 31 Aug 2016

real and imaginary parts were handled independently, were limited to the range [–3.0, 3.0] and quantized using a step size of 0.1. They were then time-differentially coded and finally Huffman coded using the scale factor codebook of the USAC. The prediction coefficients were updated every second scale-factor band, which resulted in a frequency resolution similar to that of MPEG Surround (see, e.g., ISO/IEC 23003-1). This quantization and coding scheme resulted in an average bit rate of approximately 2 kb/s for this stereo side information in a typical configuration with a target bit rate of 96 kb/s.

(iv) The bit stream format was modified without breaking current USAC bit streams, as the 2-bit *ms_mask_present* bit stream element currently has only three possible values. By using the fourth value to indicate complex prediction allows for a fallback mode of basic mid/side coding without any bits wasted (for further details on this subject, see the previous subsection of this disclosure).

The listening tests were accomplished according to the MUSHRA methodology, entailing in particular playback over headphones and the use of 8 test items with a sampling rate of 48 kHz. Three, five or six test subjects participated in each test.

The impact of different MDST approximations was evaluated to illustrate the practical complexity-to-quality trade-off that exists between these options. The results are found in figures 12 and13, the former showing absolute scores obtained and the latter showing differential scores relative to *96s USAC cp1f*, that is, MDCT-domain unified stereo coding by complex prediction using a current MDCT frame to compute an approximation of the MDST. It can be seen that the quality gain achieved by MDCT-based unified stereo coding increases when more computationally complex approaches to computing the MDST spectrum are applied. Considering the average over all test, the single-frame-based system *96s USAC cp1f* provides a significant increase in coding efficiency over conventional stereo coding. In turn, even significantly better results are obtained for *96s USAC cp3f*, namely MDCT-domain unified stereo coding by complex prediction using current, previous and next MDCT frames to compute the MDST.

2016222372 31 Aug 2016

V. Embodiments

Further, the invention may be embodied as a decoder system for decoding a bit stream signal into a stereo signal by complex prediction stereo coding, the decoder system comprising:

a dequantization stage (202; 401) for providing first frequency-domain representations of a downmix signal (M) and a residual signal (D) based on the bit stream signal, each of the first frequency-domain representations comprising first spectral components representing spectral content of the corresponding signal expressed in a first subspace of a multidimensional space, wherein the first spectral components are transform coefficients arranged in one or more time frames of transform coefficients, each block generated by application of a transform to a time segment of a time-domain signal; and

an upmix stage (206, 207, 210, 211; 406, 407, 408, 409) arranged downstream of the dequantization stage, adapted to generate the stereo signal based on the downmix signal and the residual signal and comprising:

a module (206; 408) for computing a second frequency-domain representation of the downmix signal based on the first frequency-domain representation thereof, the second frequency-domain representation comprising second spectral components representing spectral content of the signal expressed in a second subspace of the multidimensional space that includes a portion of the multidimensional space not included in the first subspace, said module being adapted to:

derive one or more first intermediate components from at least some of the first spectral components;

form a combination of said one or more first spectral components according to at least a portion of one or more impulse responses to obtain one or more second intermediate components; and

derive said one or more second spectral components from said one or more second intermediate components;

a weighted summer (210, 211; 406, 407) for computing a side signal (S) on the basis of the first and second frequency-domain repre-

sentations of the downmix signal, the first frequency-domain representation of the residual signal and a complex prediction coefficient (α) encoded in the bit stream signal; and

a sum-and-difference stage (207; 409) for computing the stereo signal on the basis of the first frequency-domain representation of the downmix signal and the side signal.

Further still, the invention may be embodied as a decoder system for decoding a bit stream signal into a stereo signal by complex prediction stereo coding, the decoder system comprising:

a dequantization stage (301) for providing first frequency-domain representations of a downmix signal (M) and a residual signal (D) based on the bit stream signal, each of the first frequency-domain representations comprising first spectral components representing spectral content of the corresponding signal expressed in a first subspace of a multidimensional space; and

an upmix stage (306, 307, 308, 309, 312) arranged downstream of the dequantization stage, adapted to generate the stereo signal based on the downmix signal and the residual signal and comprising:

a module (306, 307) for computing a second frequency-domain representation of the downmix signal based on the first frequency-domain representation thereof, the second frequency-domain representation comprising second spectral components representing spectral content of the signal expressed in a second subspace of the multidimensional space that includes a portion of the multidimensional space not included in the first subspace, the module comprising:

an inverse transform stage (306) for computing a time-domain representation of the downmix signal on the basis of the first frequency-domain representation of the downmix signal in the first subspace of the multidimensional space; and

a transform stage (307) for computing the second frequency-domain representation of the downmix signal on the basis of the time-domain representation of the signal;

a weighted summer (308, 309) for computing a side signal (S) on the basis of the first and second frequency-domain representations

of the downmix signal, the first frequency-domain representation of the residual signal and a complex prediction coefficient (α) encoded in the bit stream signal; and

a sum-and-difference stage (312) for computing the stereo signal on the basis of the first frequency-domain representation of the downmix signal and the side signal.

Additionally, the invention may be embodied as a decoder system with the features set forth in the independent decoder system claim, wherein the module for computing a second frequency-domain representation of the downmix signal comprises:

an inverse transform stage (306) for computing a time-domain representation of the downmix signal and/or the side signal on the basis of the first frequency-domain representation of the respective signal in the first subspace of the multidimensional space; and

a transform stage (307) for computing the second frequency-domain representation of the respective signal on the basis of the time-domain representation of the signal,

wherein, preferably, the inverse transform stage (306) performs an inverse modified discrete cosine transform and the transform stage performs a modified discrete sine transform.

In the above decoder system, the stereo signal may be represented in the time domain and the decoder system may further comprise:

a switching assembly (302) arranged between said dequantization stage and said upmix stage, operable to function as either:

(a) a pass-through stage, for use in joint stereo coding; or

(b) a sum-and-difference stage, for use in direct stereo coding;

a further inverse transform stage (311) arranged in the upmix stage, for computing a time-domain representation of the side signal;

a selector arrangement (305, 310) arranged upstream of the inverse transform stages (306, 301), adapted to selectively connect these to either:

(a) a further sum-and-difference stage (304) which is in turn connected to a point downstream of the switching assembly (302) and upstream of the upmix stage; or

2016222372 31 Aug 2016

(b) a downmix signal obtained from the switching assembly (302) and a side signal obtained from the weighted summer (308, 309).

VI. Closing remarks

Further embodiments of the present invention will become apparent to a person skilled in the art after reading the description above. Even though the present description and drawings disclose embodiments and examples, the invention is not restricted to these specific examples. Numerous modifications and variations can be made without departing from the scope of the present invention, which is defined by the accompanying claims.

It is noted that the methods and apparatus disclosed in this application may be applied, after appropriate modifications within the skilled person's abilities including routine experimentation, to coding of signals having more than two channels. It is particularly emphasized that any signals, parameters and matrices mentioned in connections with the described embodiments may be frequency-variant or frequency-invariant and/or time-variant or time-invariant. The described computing steps may be carried out frequency-wise or for all frequency bands at a time, and all entities may be embodied to have a frequency-selective action. For the purposes of the application, any quantization schemes may be adapted according to psycho-acoustic models. It is moreover noted that the various sum-and-difference conversions, that is, the conversion from downmix/residual form to pseudo-L/R form as well as the L/R-to-M/S conversion and the M/S-to-L/R conversion, are all of the form

$$g\begin{bmatrix}1 & 1\\ 1 & -1\end{bmatrix},$$

where, merely, the gain factor g may vary. Thus, by adjusting gain factors individually, it is possible to compensate a certain encoding gain by an appropriate choice of decoding gain. Moreover, as the skilled person realises, an even number of serially arranged sum-and-difference transforms have the effect of a pass-through stage, possibly with non-unity gain.

The systems and methods disclosed hereinabove may be implemented as software, firmware, hardware or a combination thereof. Certain components or all components may be implemented as software executed by a digital signal processor or microprocessor, or be implemented as hardware

2016222372 31 Aug 2016

or as an application-specific integrated circuit. Such software may be distributed on computer readable media, which may comprise computer storage media and communication media. As is well known to a person skilled in the art, computer storage media includes both volatile and non-volatile, removable and non-removable media implemented in any method or technology for storage of information such as computer readable instructions, data structures, program modules or other data. Computer storage media includes, but is not limited to, RAM, ROM, EEPROM, flash memory or other memory technology, CD-ROM, digital versatile disks (DVD) or other optical disk storage, magnetic cassettes, magnetic tape, magnetic disk storage or other magnetic storage devices, or any other medium which can be used to store the desired information and which can be accessed by a computer. Further, it is known to the skilled person that communication media typically embodies computer readable instructions, data structures, program modules or other data in a modulated data signal such as a carrier wave or other transport mechanism and includes any information delivery media.

The term "comprise" and variants of that term such as "comprises" or "comprising" are used herein to denote the inclusion of a stated integer or integers but not to exclude any other integer or any other integers, unless in the context or usage an exclusive interpretation of the term is required.

Reference to prior art disclosures in this specification is not an admission that the disclosures constitute common general knowledge in Australia or any other country.

2016222372 31 Aug 2016

CLAIMS

1. A decoder system for providing a stereo signal from a bit stream signal by complex prediction stereo coding, the decoder system comprising:

an upmix stage adapted to generate the stereo signal based on first frequency-domain representations of a downmix signal (M) and a residual signal (D), each of the first frequency-domain representations comprising first spectral components representing spectral content of the corresponding signal expressed in a first subspace of a multidimensional space, the upmix stage comprising:

a module for computing a second frequency-domain representation of the downmix signal based on the first frequency-domain representation thereof, the second frequency-domain representation comprising second spectral components representing spectral content of the signal expressed in a second subspace of the multidimensional space that includes a portion of the multidimensional space not included in the first subspace, wherein the module is adapted to determine the second spectral components of the downmix signal by applying a Finite Impulse Reponse (FIR) filter to the first spectral components of the downmix signal;

a weighted summer for computing a side signal (S) on the basis of the first and second frequency-domain representations of the downmix signal, the first frequency-domain representation of the residual signal and a complex prediction coefficient (α) encoded in the bit stream signal; and

a sum-and-difference stage for computing the stereo signal on the basis of the first frequency-domain representation of the downmix signal and the side signal;

a first frequency-domain modifier stage arranged upstream of the upmix stage and operable in an active mode, in which it processes a frequency-domain representation of at least one signal, and a passive mode, in which it acts as a pass-through; and

2016222372 31 Aug 2016

a second frequency-domain modifier stage arranged downstream of the upmix stage and operable in an active mode, in which it processes a frequency-domain representation of at least one signal, and a passive mode, in which it acts as a pass-through.

2. The decoder system of claim 1, wherein an impulse response of the FIR filter is determined depending on a window function applied to determine the first frequency domain representation of the downmix signal.

3. The decoder system of claim 1, wherein at least one of said frequency-domain modifier stages is a temporal noise shaping, TNS, stage.

4. The decoder system of claim 3, further adapted to receive, for each time frame, a data field associated with that frame and to operate, responsive to the value of the data field, the first frequency-domain modifier stage in its active mode or its pass-through mode and the second frequency-domain modifier stage in its active mode or its pass-through mode.

5. The decoder system of any one of the preceding claims, further comprising:

a dequantization stage arranged upstream of the upmix stage, for providing said first frequency-domain representations of the downmix signal (M) and residual signal (D) based on the bit stream signal.

6. The decoder system of any one of the preceding claims, wherein:

the first spectral components have real values expressed in the first subspace;

the second spectral components have imaginary values expressed in the second subspace;

optionally, the first spectral components are obtainable by one of the following:

a discrete cosine transform, DCT, or

a modified discrete cosine transform, MDCT, and

2016222372 31 Aug 2016

optionally, the second spectral components are obtainable by one of the following:

a discrete sine transform, DST, or

a modified discrete sine transform, MDST.

7. The decoder of claim 6, wherein:

the downmix signal is partitioned into successive time frames, each associated with a value of the complex prediction coefficient; and

the module for computing a second frequency-domain representation of the downmix signal is adapted to deactivate itself, responsive to the absolute value of the imaginary part of the complex prediction coefficient being smaller than a predetermined tolerance for a time frame, so that it generates no output for that time frame.

8. The decoder system of any one of the preceding claims, said stereo signal being represented in the time domain and the decoder system further comprising:

a switching assembly arranged between said dequantization stage and said upmix stage, operable to function as either:

(a) a pass-through stage, or

(b) a sum-and-difference stage,

thereby enabling switching between directly and jointly coded stereo input signals;

an inverse transform stage adapted to compute a time-domain representation of the stereo signal; and

a selector arrangement arranged upstream of the inverse transform stage, adapted to selectively connect this to either:

(a) a point downstream of the upmix stage, whereby the stereo signal obtained by complex prediction is supplied to the inverse transform stage; or

(b) a point downstream of the switching assembly and upstream of the upmix stage, whereby a stereo signal obtained by direct stereo coding is supplied to the inverse transform stage.

2016222372 31 Aug 2016

9. The decoder system of any one of the preceding claims, wherein the module for computing a second frequency-domain representation of the downmix signal comprises:

an inverse transform stage for computing a time-domain representation of the downmix signal and/or of the side signal on the basis of the first frequency-domain representation of the respective signal in the first subspace of the multidimensional space; and

a transform stage for computing the second frequency-domain representation of the respective signal on the basis of the time-domain representation of the signal,

wherein, preferably, the inverse transform stage performs an inverse modified discrete cosine transform, MDCT, and the transform stage performs a modified discrete sine transform, MDST.

10. The decoder system of claim 9, said stereo signal being represented in the time domain and the decoder system further comprising:

a switching assembly arranged between said dequantization stage and said upmix stage, operable to function as either:

(a) a pass-through stage, for use in joint stereo coding; or

(b) a sum-and-difference stage, for use in direct stereo coding;

a further inverse transform stage arranged in the upmix stage, for computing a time-domain representation of the side signal;

a selector arrangement arranged upstream of the inverse transform stages, adapted to selectively connect these to either:

(a) a further sum-and-difference stage which is in turn connected to a point downstream of the switching assembly and upstream of the upmix stage; or

(b) a downmix signal obtained from the switching assembly and a side signal obtained from the weighted summer.

11. A decoding method for upmixing an input stereo signal by complex prediction stereo coding into an output stereo signal, wherein:

2016222372 31 Aug 2016

said input stereo signal comprises first frequency-domain representations of a downmix channel (M) and a residual channel (D) and a complex prediction coefficient (α); and

each of said first frequency-domain representations comprises first spectral components representing spectral content of the corresponding signal expressed in a first subspace of a multidimensional space,

the method being performed by an upmix stage and including the steps of:

computing a second frequency-domain representation of the downmix channel based on the first frequency-domain representation thereof, the second frequency-domain representation comprising second spectral components representing spectral content of the signal expressed in a second subspace of the multidimensional space that includes a portion of the multidimensional space not included in the first subspace, wherein computing a second frequency-domain representation of the downmix signal includes determining the second spectral components of the downmix signal by applying a Finite Impulse Reponse (FIR) filter to the first spectral components of the downmix signal;

computing the side channel on the basis of the first and second frequency-domain representations of the downmix signal, the first frequency-domain representation of the residual signal and the complex prediction coefficient;

and further comprising either the step, to be performed prior to the step of upmixing, of applying temporal noise shaping, TNS, to said first frequency-domain representation of the downmix signal and/or said first frequency-domain representation of the residual signal;

or the step, to be performed after the step of upmixing, of applying TNS to at least one channel of said stereo signal.

12. A computer-program product comprising a computer-readable medium storing instructions which when executed by a general-purpose computer perform the method set forth in claim 11.

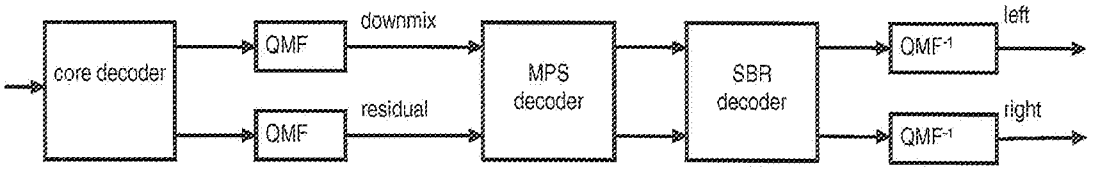
core decoder
QMF
QMF
downmix
residual
MPS decoder
SBR decoder
QMF-1
QMF-1
left
right

Fig. 1A

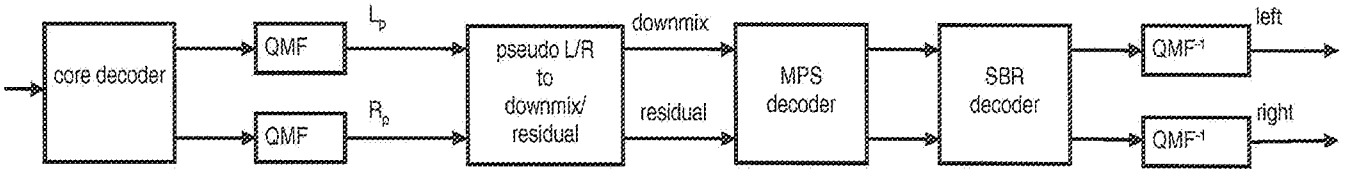
core decoder
QMF
QMF
L_p
R_p
pseudo L/R to downmix/ residual
downmix
residual
MPS decoder
SBR decoder
QMF-1
QMF-1
left
right

Fig. 1B

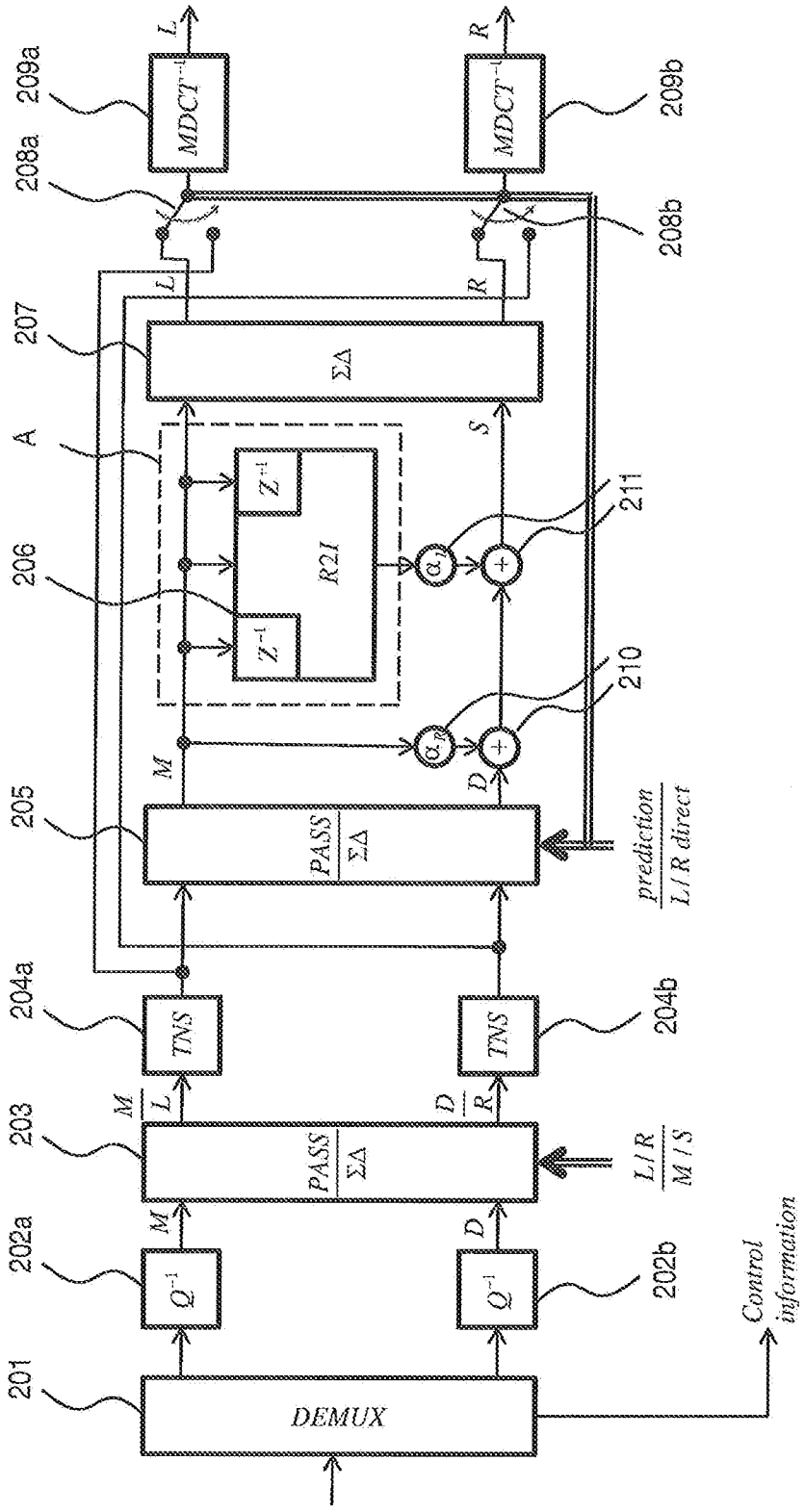
201
DEMUX
202a
Q^{-1}
202b
Q^{-1}
Control information
203
PASS
ΣΔ
M
L
D
R
L / R
M / S
204a
TNS
204b
TNS
205
PASS
ΣΔ
prediction
L / R direct
206
A
Z^{-1}
R2I
Z^{-1}
α_L
α_R
210
211
207
ΣΔ
S
208a
208b
209a
$MDCT^{-1}$
209b
$MDCT^{-1}$

Fig. 2

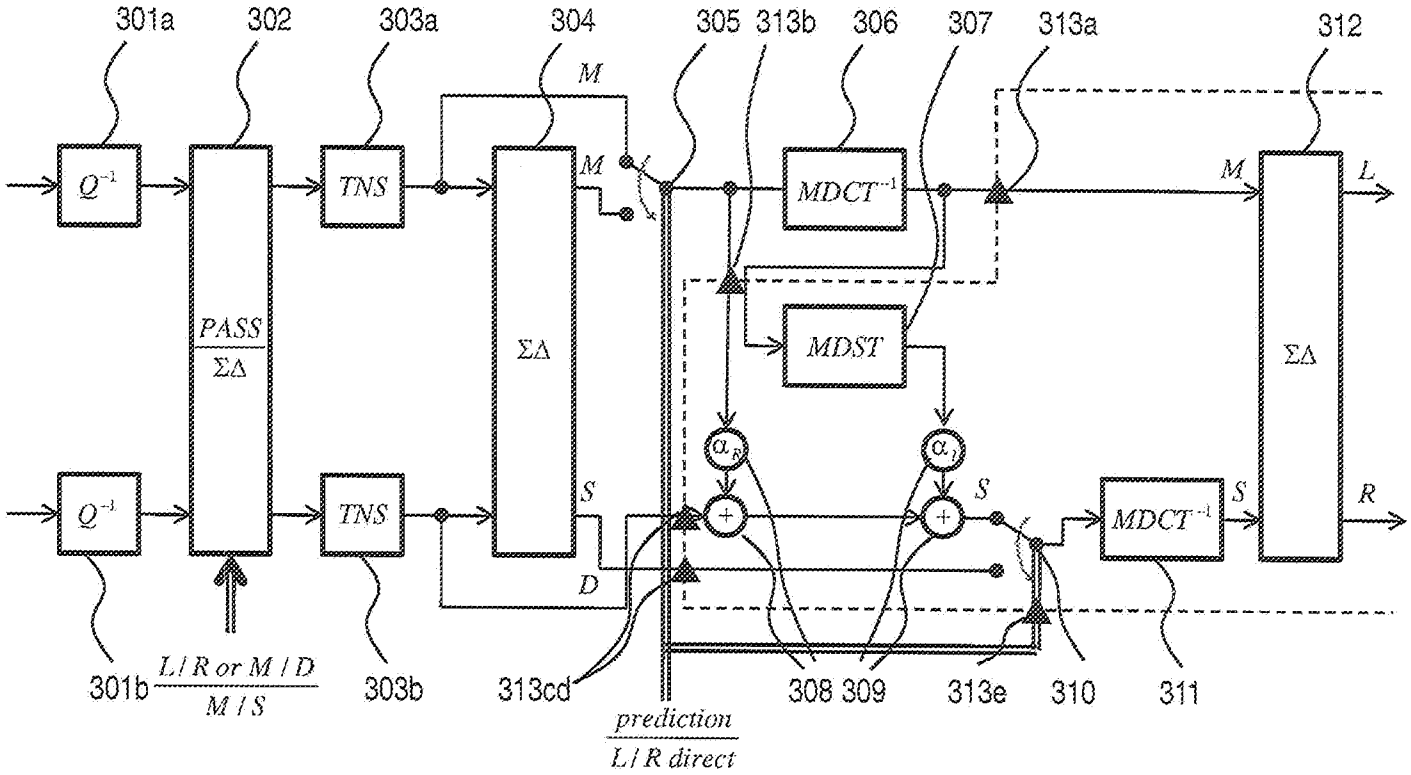
301a
302
303a
304
305
313b
306
307
313a
312
M
M
M
L
Q^{-1}
Q^{-1}
PASS
ΣΔ
TNS
TNS
ΣΔ
ΣΔ
MDCT^{-1}
MDST
α_R
α_I
S
S
S
R
D
MDCT^{-1}
301b
L / R or M / D
M / S
303b
313cd
prediction
L / R direct
308
309
313e
310
311

Fig. 3

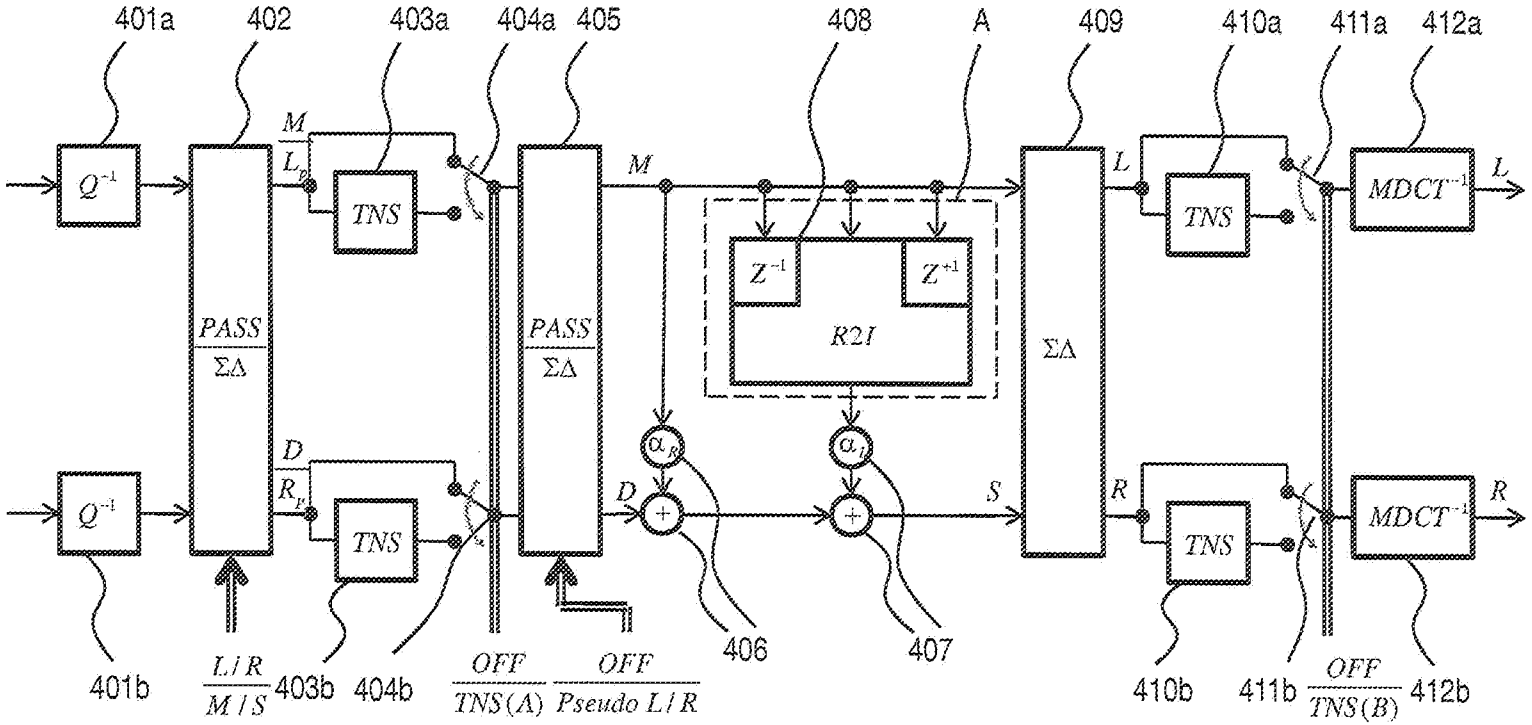
401a
402
403a
404a
405
408
A
409
410a
411a
412a
Q^{-1}
PASS
ΣΔ
M
L_P
TNS
L
M
Z^{-1}
Z^{+1}
R2I
ΣΔ
L
TNS
$MDCT^{-1}$
L
D
R_P
α_R
α_I
D
S
R
TNS
$MDCT^{-1}$
R
401b
L/R
M/S
403b
404b
OFF
TNS(A)
OFF
Pseudo L/R
406
407
410b
411b
OFF
TNS(B)
412b

Fig. 4

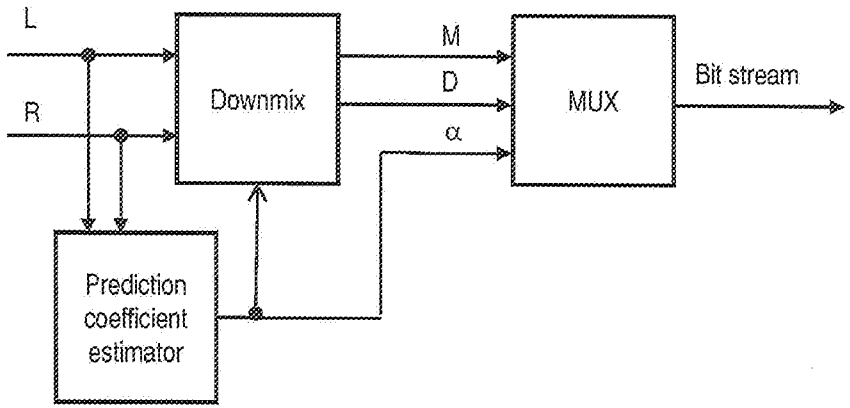
L
R
Downmix
M
D
α
MUX
Bit stream
Prediction coefficient estimator

Fig. 5

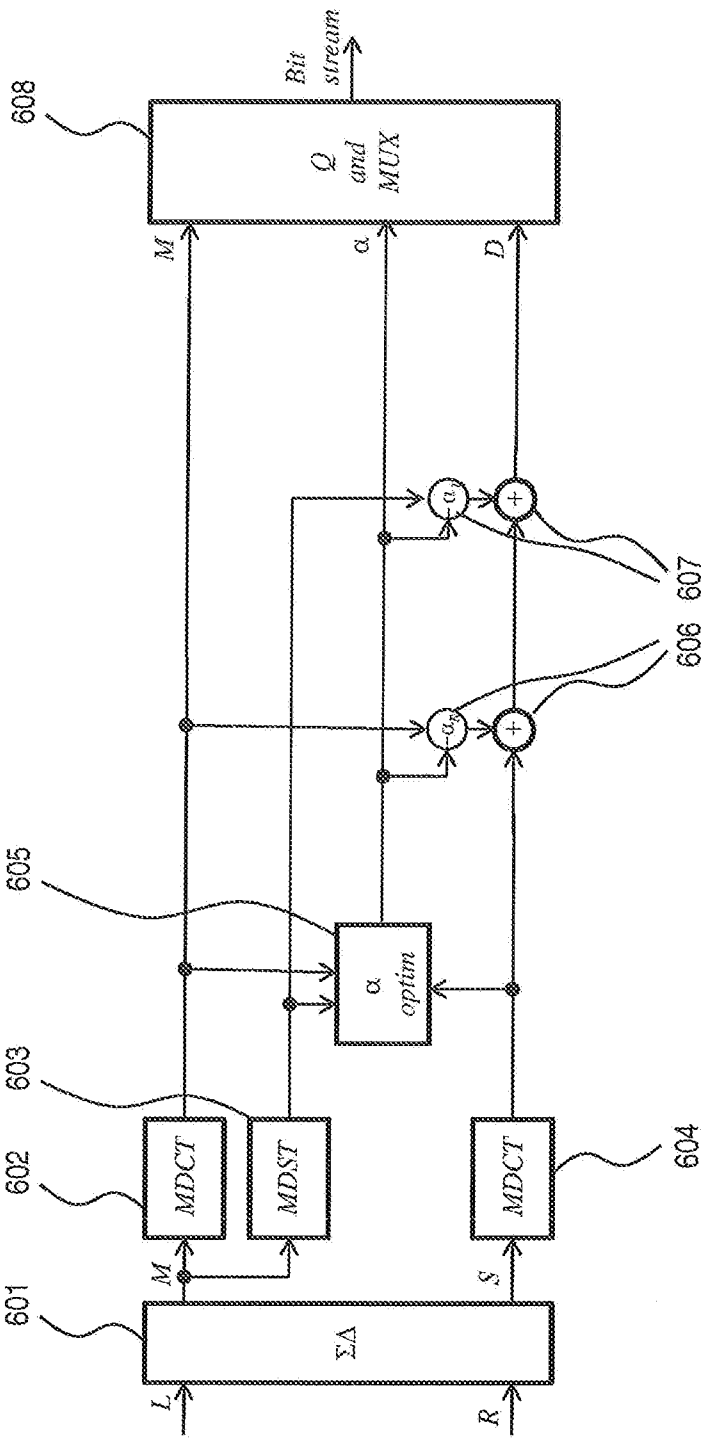
608
Bit stream
Q and MUX
M
α
D
605
α optim
603
602
MDCT
MDST
MDCT
604
M
S
601
ΣΔ
L
R
607
606

Fig. 6

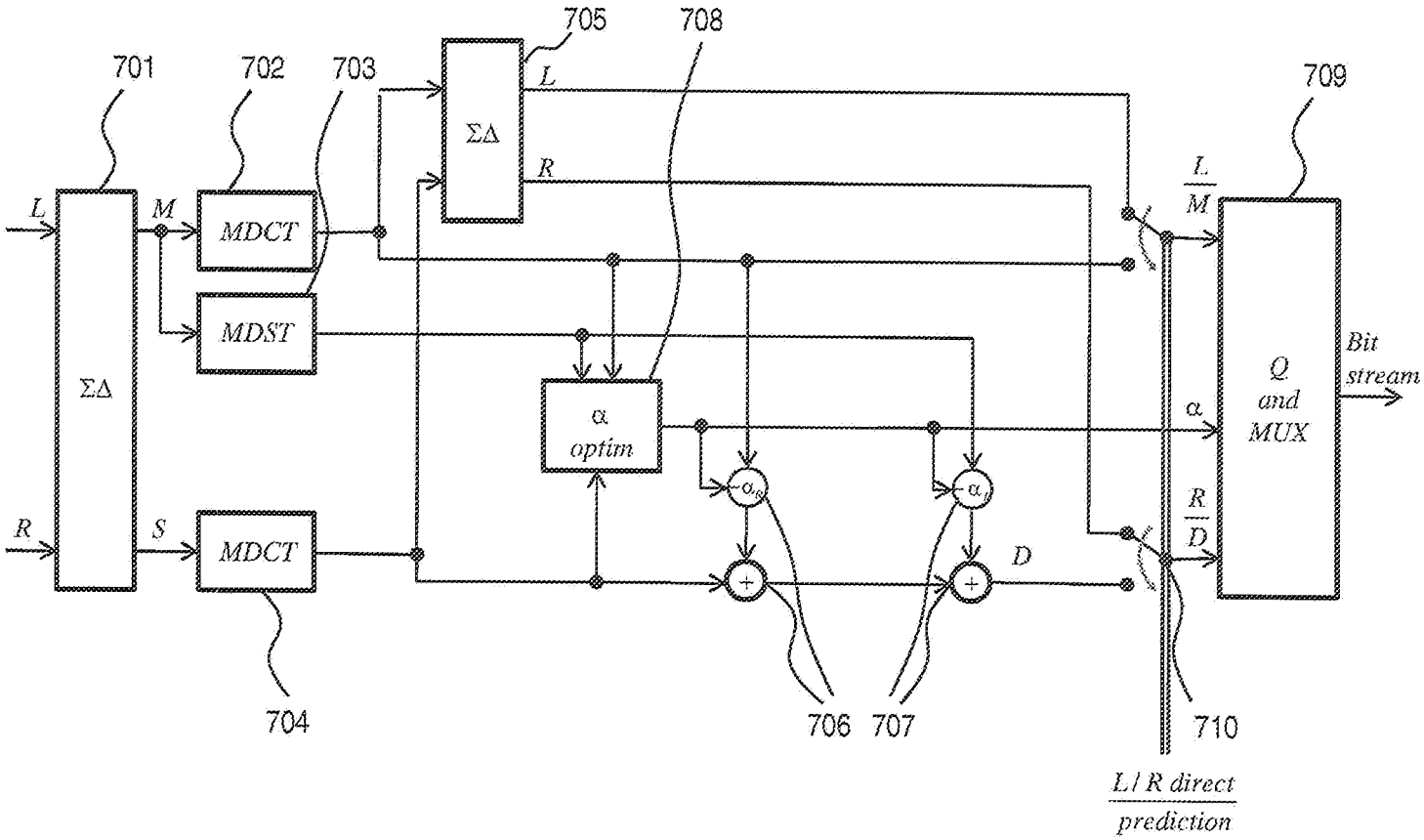
701
702
703
705
708
709
L
M
R
S
ΣΔ
MDCT
MDST
MDCT
ΣΔ
α optim
L
R
L/M
R/D
α
D
Q and MUX
Bit stream
704
706
707
710
L/R direct prediction

7/16

Fig. 7

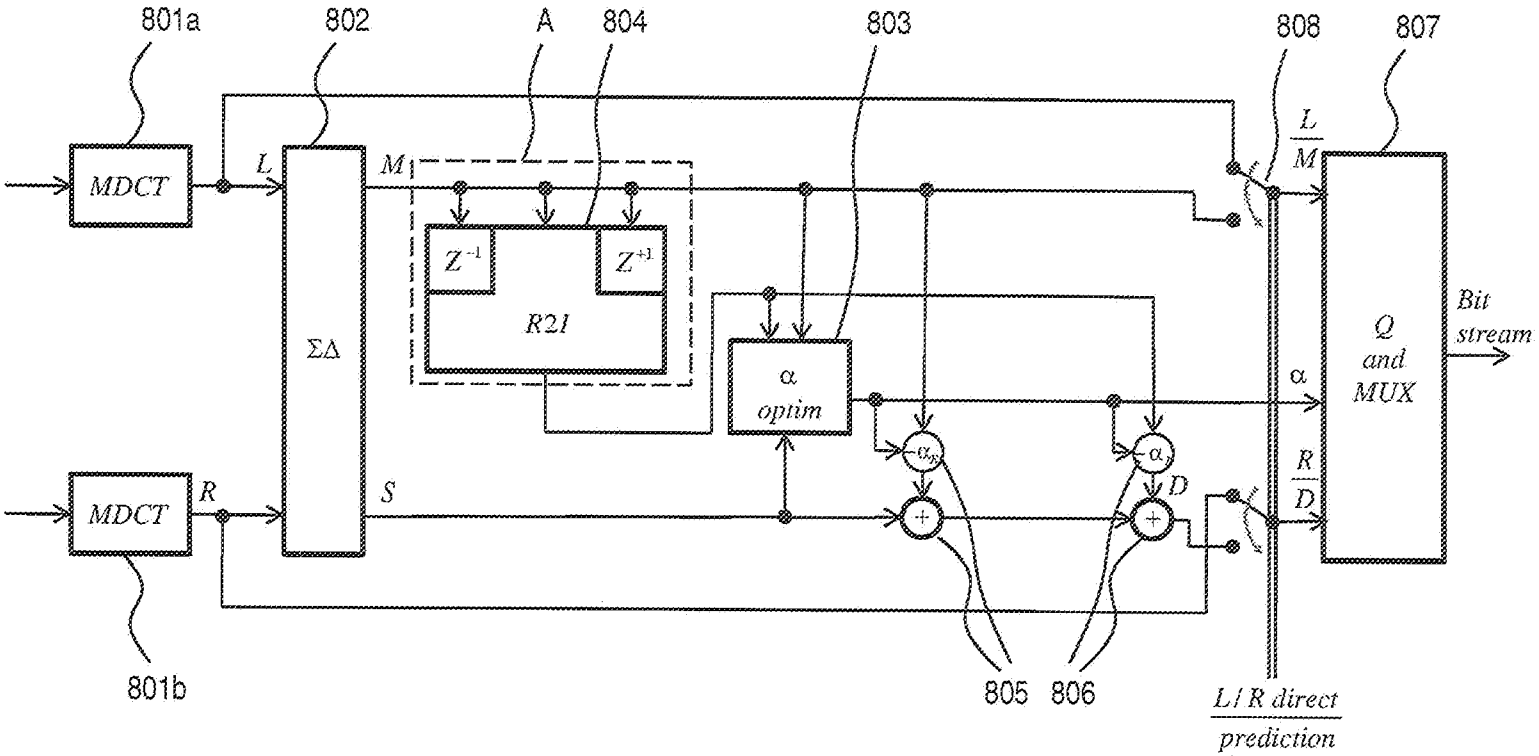
801a
802
A
804
803
808
807
MDCT
L
M
Z^{-1}
Z^{+1}
R21
ΣΔ
α optim
L/M
Q and MUX
Bit stream
α
MDCT
R
S
α_{opt}
α
D
R/D
801b
805
806
L/R direct prediction

Fig. 8

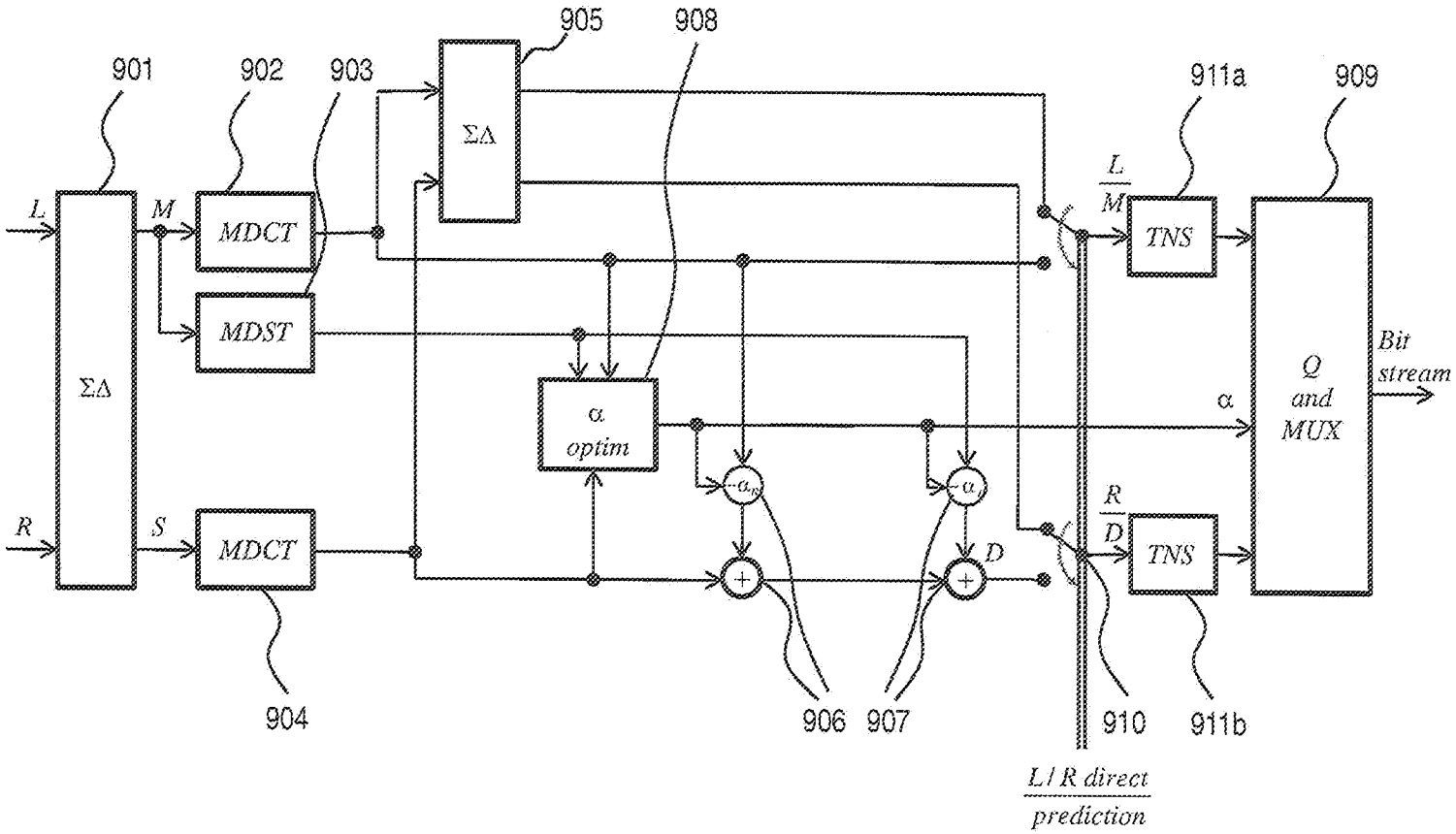
901
902
903
905
908
911a
909
L
M
MDCT
MDST
ΣΔ
ΣΔ
L/M
TNS
Q and MUX
Bit stream
α optim
α
R
S
MDCT
R/D
TNS
D
904
906
907
910
911b
L/R direct prediction

Fig. 9

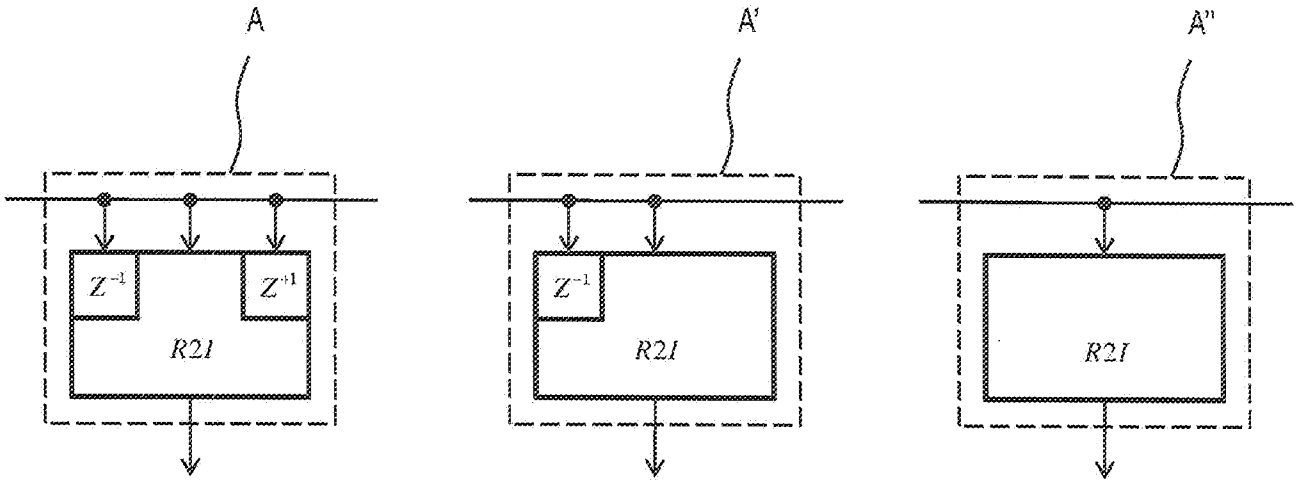

Fig. 10

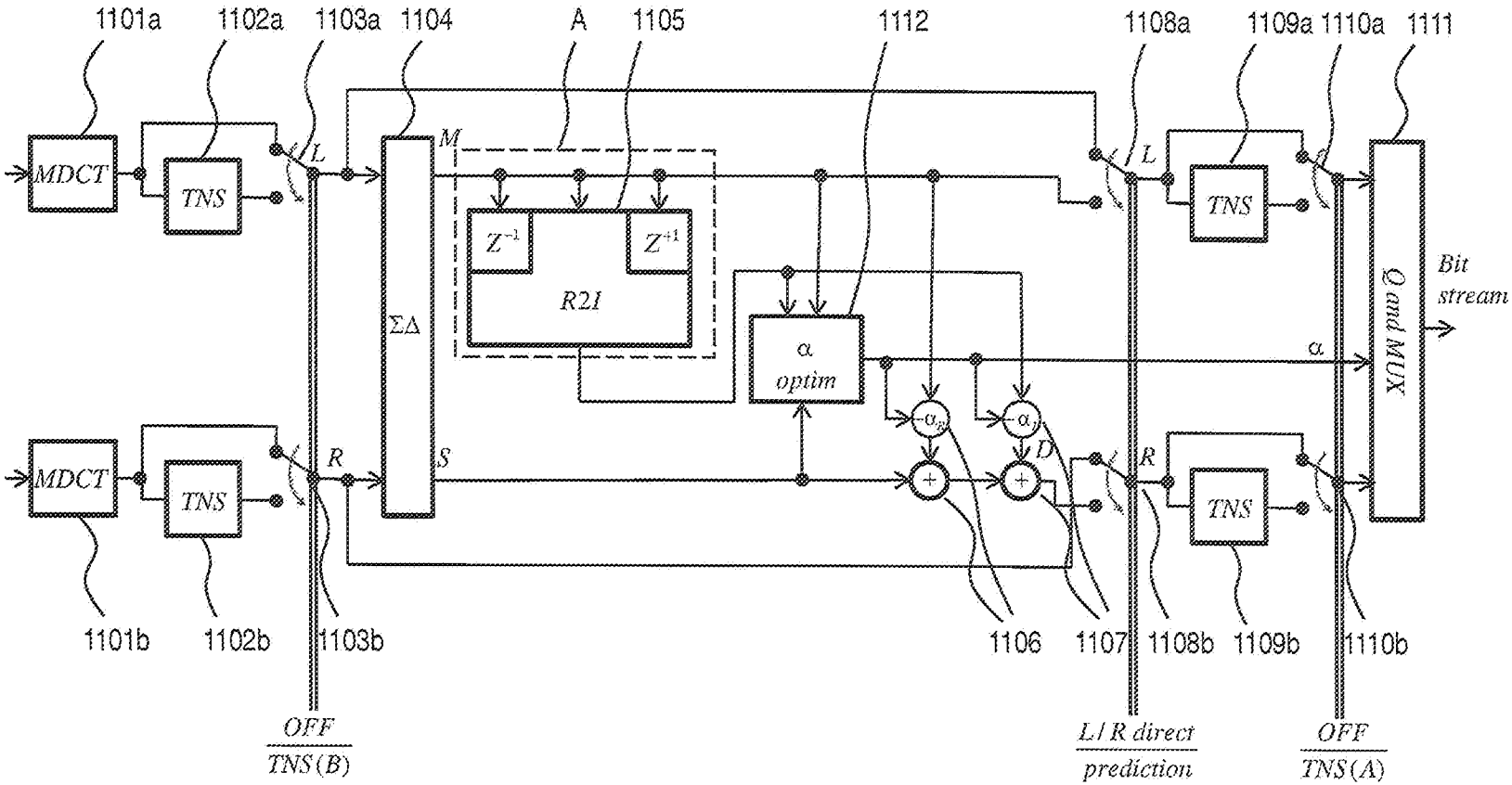
1101a
1102a
1103a
1104
A
1105
1112
1108a
1109a
1110a
1111
MDCT
TNS
L
M
ΣΔ
Z⁻¹
Z⁺¹
R2I
α
optim
-α_R
-α_I
D
R
S
Q and MUX
Bit
stream
1101b
1102b
1103b
1106
1107
1108b
1109b
1110b
OFF
TNS(B)
L/R direct
prediction
OFF
TNS(A)

Fig. 11

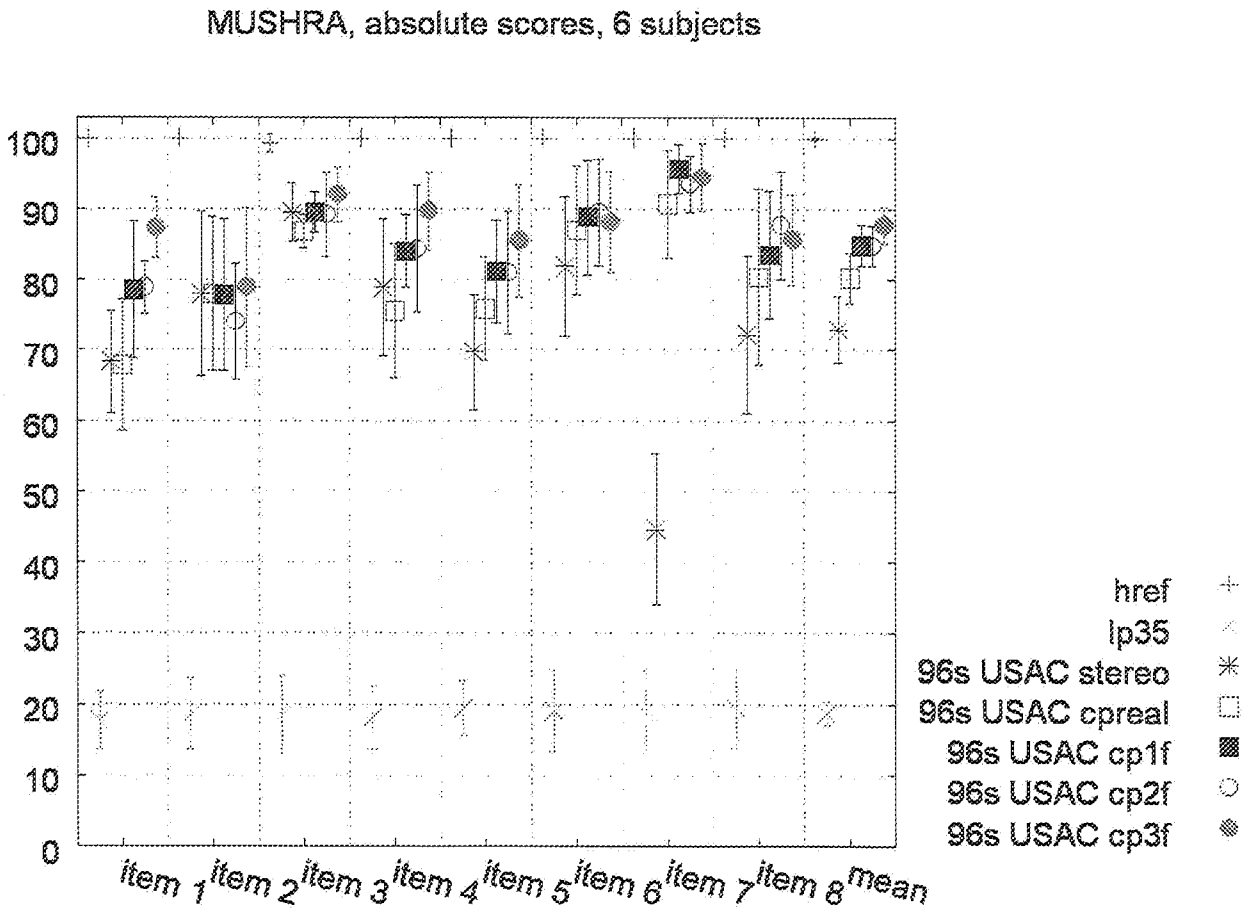
MUSHRA, absolute scores, 6 subjects
100
90
80
70
60
50
40
30
20
10
0
item 1
item 2
item 3
item 4
item 5
item 6
item 7
item 8
mean
href
lp35
96s USAC stereo
96s USAC cpreal
96s USAC cp1f
96s USAC cp2f
96s USAC cp3f

Fig. 12

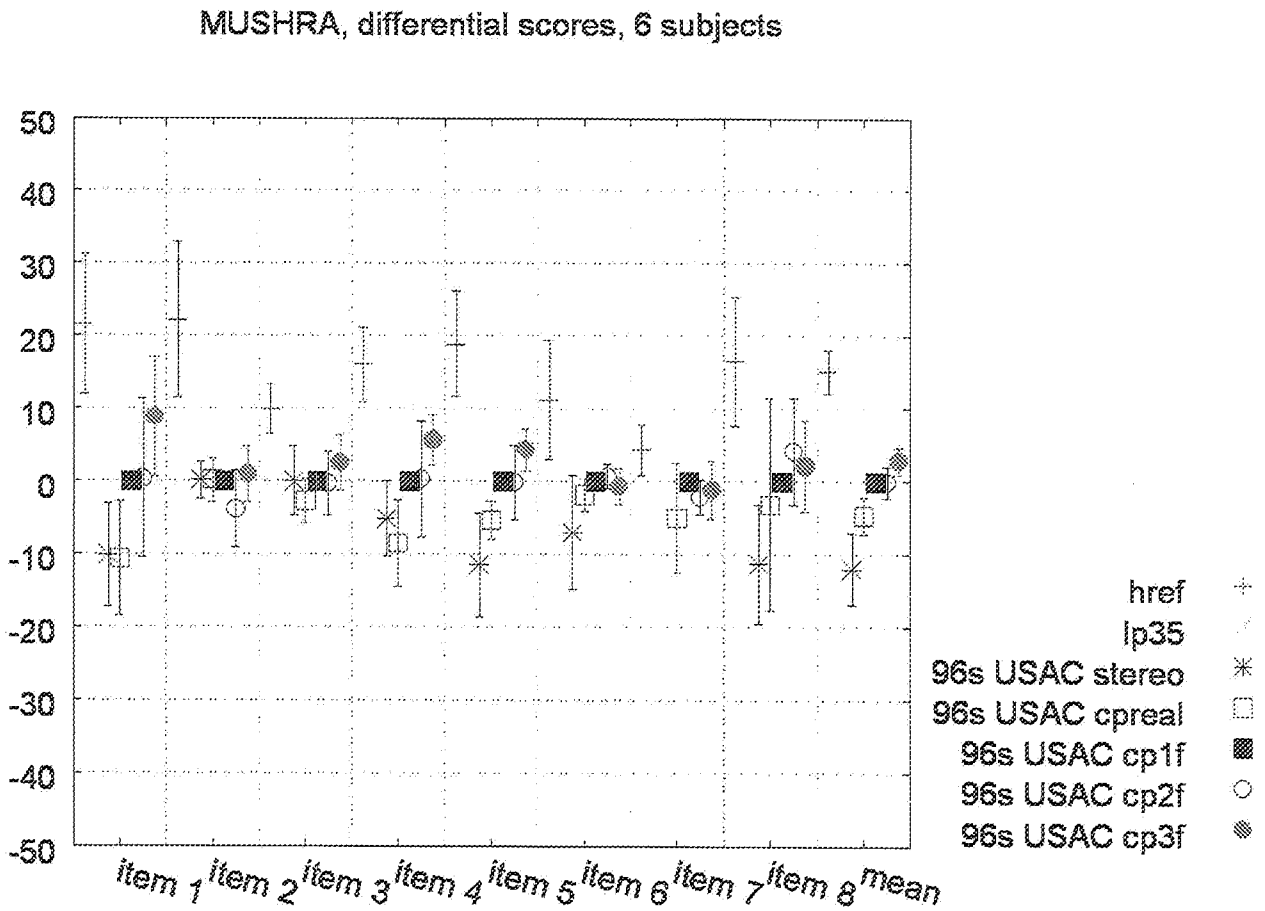
MUSHRA, differential scores, 6 subjects
50
40
30
20
10
0
-10
-20
-30
-40
-50
item 1
item 2
item 3
item 4
item 5
item 6
item 7
item 8
mean
href
lp35
96s USAC stereo
96s USAC cpreal
96s USAC cp1f
96s USAC cp2f
96s USAC cp3f

Fig. 13

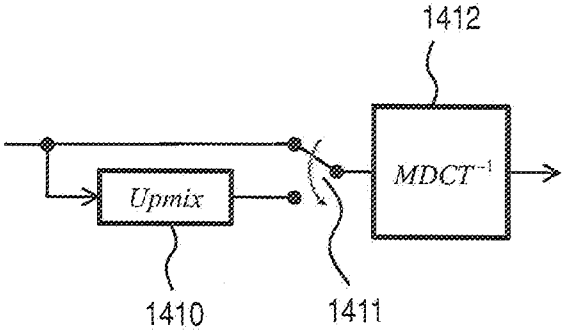

Fig. 14A

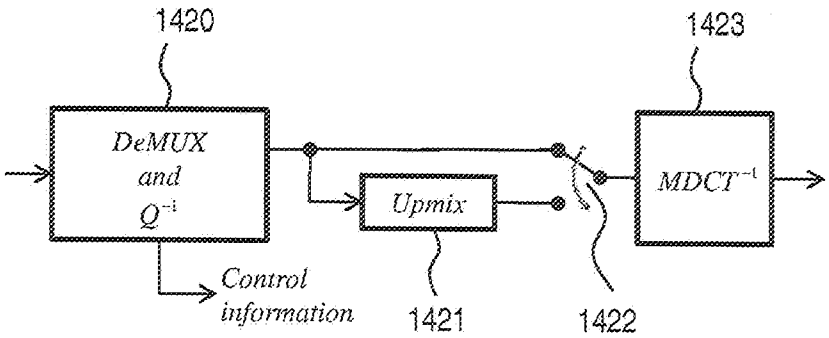

Fig. 14B

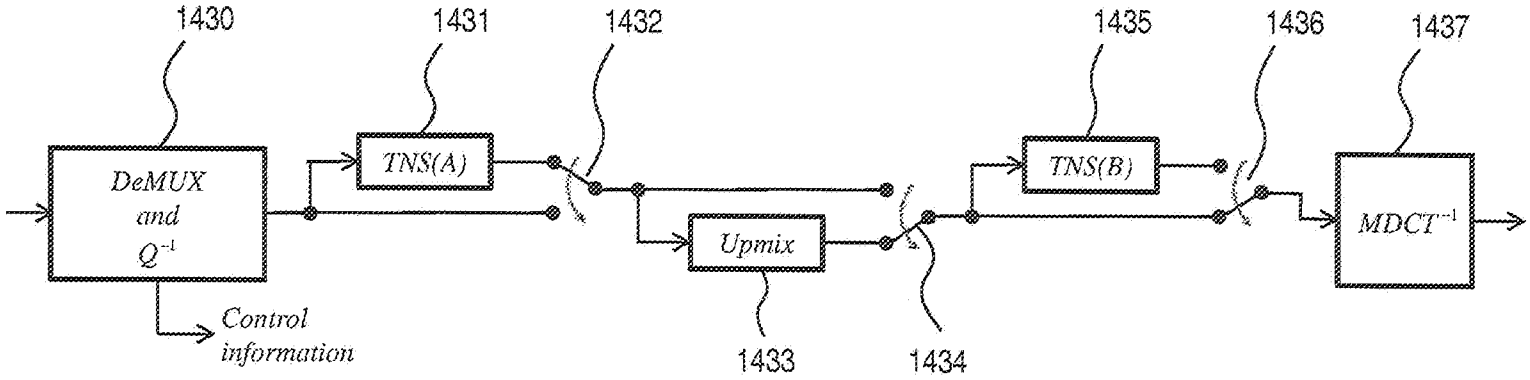

Fig. 14C

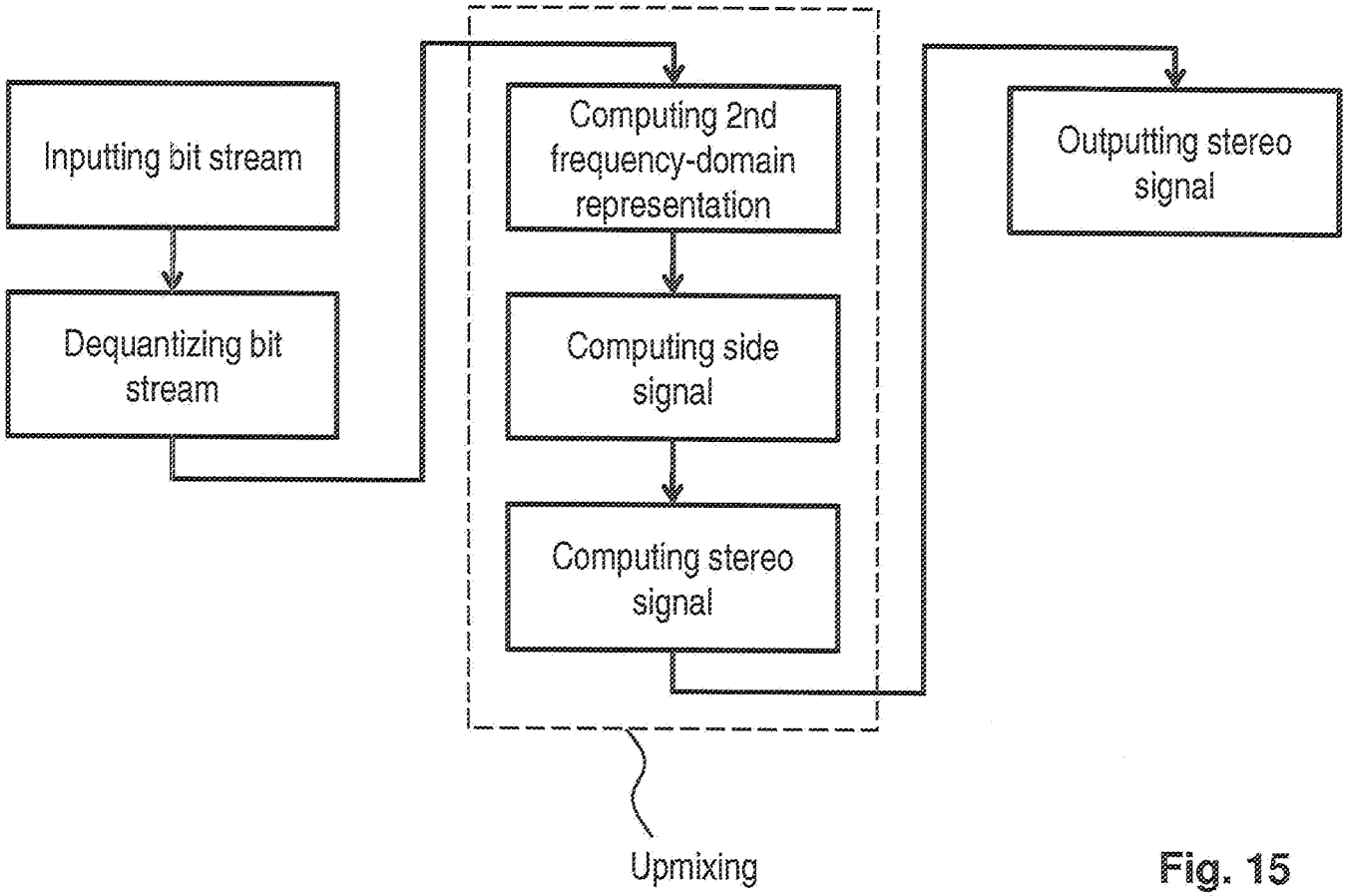
Inputting bit stream
Dequantizing bit stream
Computing 2nd frequency-domain representation
Computing side signal
Computing stereo signal
Outputting stereo signal
Upmixing

Fig. 15

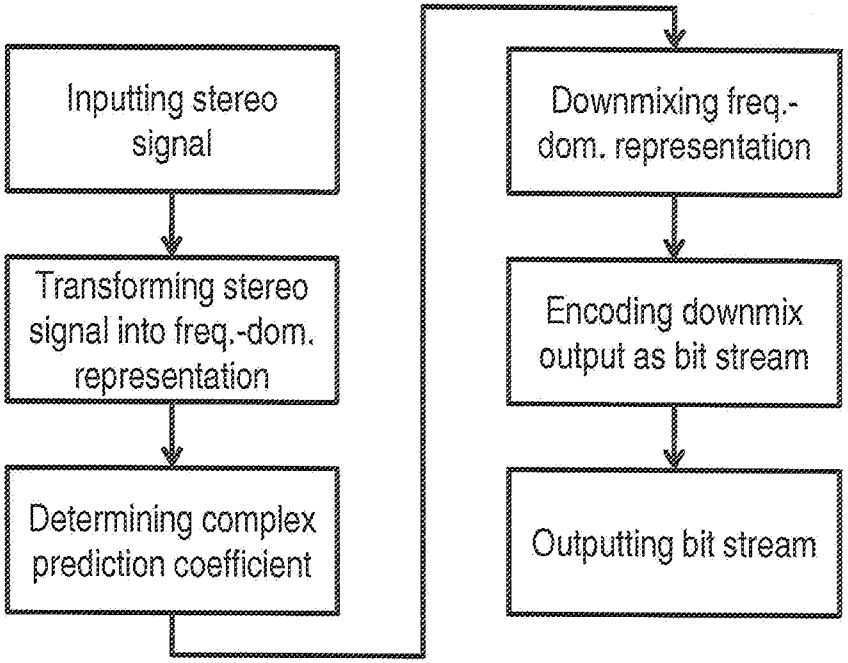
Inputting stereo signal
Transforming stereo signal into freq.-dom. representation
Determining complex prediction coefficient
Downmixing freq.-dom. representation
Encoding downmix output as bit stream
Outputting bit stream

Fig. 16