April 20, 1965 M. O. SCHUR 3,179,025

APPARATUS FOR PERFORATING

Original Filed June 10, 1960 2 Sheets-Sheet 1

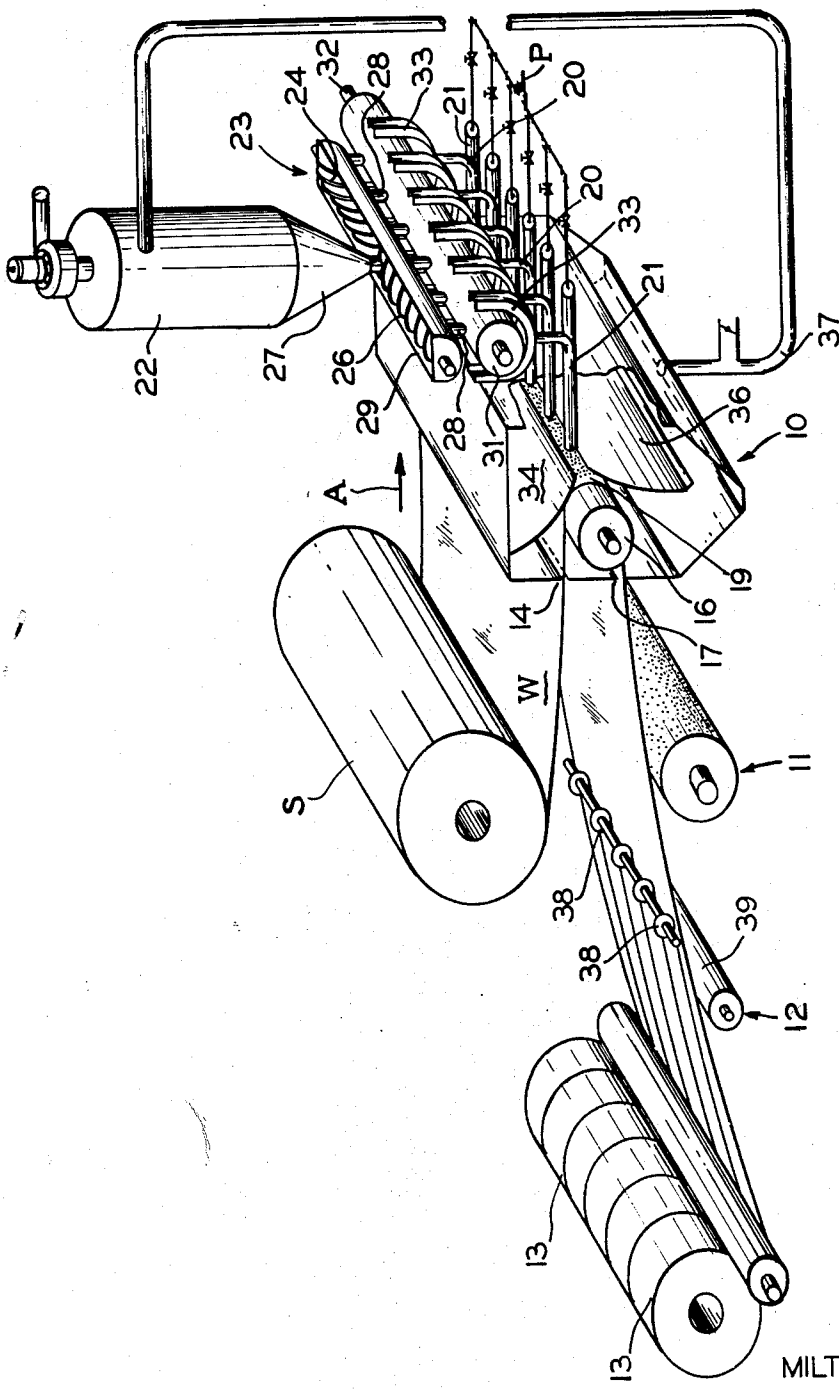

FIG - 1

INVENTOR.
MILTON O. SCHUR

BY Donald R. Matteson

APPARATUS FOR PERFORATING

Original Filed June 10, 1960 2 Sheets-Sheet 2

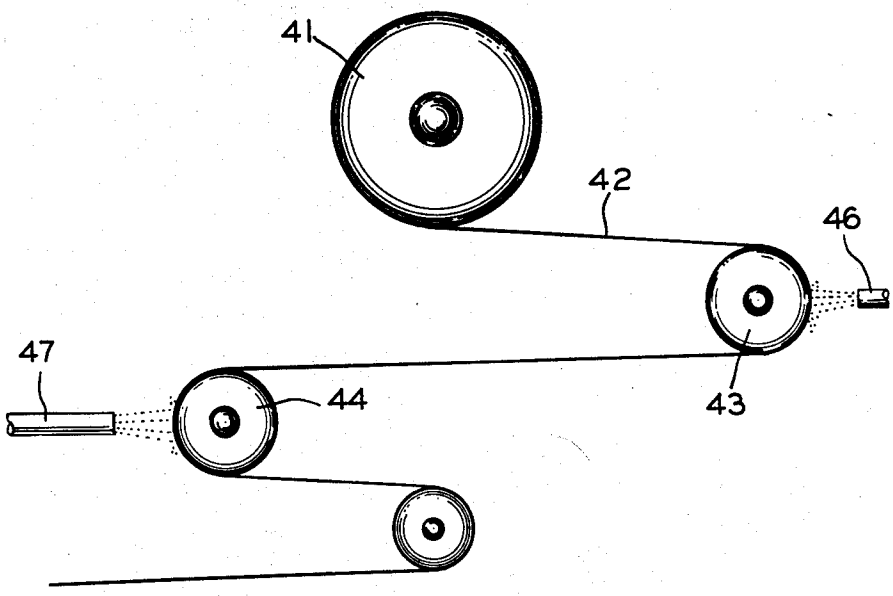

FIG - 2

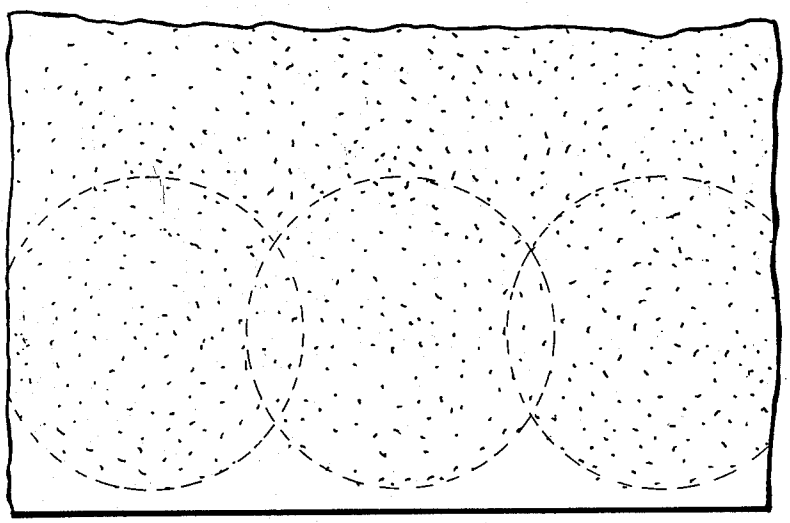

FIG - 3

INVENTOR.
MILTON O. SCHUR
BY Donald R. Matthews

United States Patent Office 3,179,025 Patented Apr. 20, 1965

3,179,025

APPARATUS FOR PERFORATING

Milton O. Schur, Asheville, N.C., assignor to Olin Mathieson Chemical Corporation, a corporation of Virginia

Original application June 10, 1960, Ser. No. 35,256. Divided and this application May 28, 1963, Ser. No. 290,876

2 Claims. (Cl. 93—1)

This application is a division of Schur application S.N. 35,256, filed June 10, 1960 (now abandoned in view of continuation-in-part application S.N. 339,944, filed January 24, 1964).

The present invention relates to paper and plastics and, in particular, to the facility with which fluid, such as air, may be transferred through the paper or plastic films or sheets.

Frequently this characteristic of paper or plastic sheets is referred to as porosity and in the prior art porosity has been fabricated into a paper sheet or web by regulating fibrillation in the paper mill or by perforating, slitting or renting by mechanical means subsequent to the manufacture of paper.

In certain prior art schemes for rendering paper sheet material more permeable to air, the means for increasing the porosity of the paper has had undesirable effects upon the tensile strength and burning rate of the paper.

For example, in fine papers, such as cigarette paper, increase in the porosity of the paper by regulation of fibrillation in the paper mill during manufacture, has resulted in a substantial decrease in tensile strength and a substantial increase in burning rate of the paper.

Both these occurrences are undesirable in the cigarette art.

Consequently, it is a prime feature of the present invention to provide a method and apparatus for increasing the air permeability of paper sheets without altering substantially the tensile strength or the burning rate of the paper.

Another feature of the present invention is the provision of a novel process for forming openings, rents or other apertures in a continuously advancing web of paper.

Another feature of the present invention is the provision of a novel method and apparatus for forming microscopic openings in continuously advancing sheet material, generally.

Another feature of the present invention is the provision of a simple, inexpensive process for treating cigarette paper so as to increase the air permeability of the paper without altering in a substantial way the tensile strength or burning rate of the paper.

A method of accomplishing increased air permeability of a web of paper or plastic material may comprise the steps of continuously advancing the web over an anvil and bombarding the web backed by said anvil with a fluid jet including a dispersion of solid particles whereby the particles are effective to form microscopic rents or openings in the web.

An apparatus embracing certain principles of the present invention and utilized to practice the process steps thereof may comprise a supply roll and a take-up roll, a cylindrical anvil for supporting the web as it passes from the supply roll to the take-up roll, jet means for guiding solid particles toward the web while backed by the anvil, conveyor means including a distributor cooperating with the jet means for introducing solid particles to the jet means whereby solid particles are dispersed upon the web, an abrading roll in contact with the paper for removing fibrous projections and slitting means for cutting the sheet longitudinally to convert the sheet into bobbins.

Other features and advantages of the present invention will become more apparent from the succeeding specification when read in conjunction with the appended drawings, in which:

FIG. 1 is a schematic view of an apparatus operable to practice the process steps of the present invention;

FIG. 2 is a schematic of an additional embodiment of the invention showing apparatus operable to treat a continuously advancing web upon both sides.

FIG. 3 is an enlarged view of a portion of treated web showing the dispersion pattern developed by the process of the present invention.

Referring now to the drawings, there is shown in FIG. 1 a supply roll of paper S which for purposes of describing an exemplary embodiment of the present invention is identified as a roll of cigarette paper.

The roll S is mounted in appropriate spindles (not shown) and is operative to pay off in the direction shown by the arrow labelled A and is led through a chamber, indicated generally by the reference numeral **10**, and thence to an abrading roll **11**.

Thereafter the web passes between slitting rolls, indicated generally at **12**, and is ultimately wound into a plurality of bobbins **13**.

More specifically, the paper web W passes from the supply roll S through an elongated slot **14** formed in the chamber **10**, thence around anvil roll **16** and emerges through an elongated slot **17**; the end wall of the chamber **10** facing a viewer of FIG. 1 has been removed for clarity.

While the web is in contact with the anvil **16**, the surface **19** of the web is exposed to a jet or blast of solid particles driven by fluid under pressure from a plurality of guide or jet tubes **21—21**.

In the disclosed embodiment of the invention the solid particle matter utilized is sand having a particle size such that the granules pass through a **50** mesh screen but are retained upon an 80 mesh screen.

The above description of the solid particles are described primarily to explain an illustrative embodiment of the invention and the description is not intended to limit the invention because it is anticipated that other solid particles of different particle size and of different material may achieve the desired increase in air permeability depending upon the particular web treated.

Obviously, any suitable gas or fluid under pressure may be utilized to create a jet. It is anticipated that the apparatus and process of the present invention will be useful in treating web material generally including polyolefin and cellophane films, paper and other fibrous or plastic sheet or webs.

The sand particles are stored in collector **22** and drop downwardly onto a distributor means indicated generally by the reference numeral **23**, the disclosed embodiment thereof comprising a conveyor screw having a section **24** and a section **26** fabricated with leads of opposite hand. This arrangement is effective to distribute the sand laterally from the funnel **27** to the various outlets **28—28** depending from a trough-like structure **29** within which the screw is rotatably mounted and housed. Disposed below the outlets **28—28** is a distributor roll **31** which rotates about axis **32** to distribute the sand circumferentially about roll **31**.

Disposed below the roll **31** are a plurality of generally U-shaped collectors or traps **33—33**. Each trap **33** is positioned in alignment with a corresponding outlet **28** and is formed with a dimension across its width which is wider than the opening of its mating outlet **28** so that the sand discharged from a particular outlet **28** is caught or trapped in its entirety in the mating trap **33**.

Each jet or guide tube **21—21** is connected to a source of air pressure indicated generally by the reference nu-

meral P so that a Venturi effect is created by the introduction of air under pressure into the tubes 21—21 with the result that as the air passes through the tubes 21—21, a vacuum is created in nipples 20—20 and sand particles are drawn from the traps 33—33 and blasted or dispersed towards the paper while backed by the anvil roll 16 effective to form microscopic rents in the paper as it continuously passes over the anvil roll.

A reference to the illustration of FIG. 3, particularly the pattern disposed within the region bounded by the intersecting dotted circles shows generally the instantaneous dispersion pattern achieved by bombarding the continuously advancing web W with sand particles propelled by air pressure in the manner just described. A random distribution is achieved.

Obviously, the dispersion pattern of the particles of sand may be regulated by adjusting the displacement of the jet tube 21—21 relative to the anvil roll or by changing the air pressure or by changing the particle size or composition of particles or by any combination or permutation of all these considerations.

Baffles 34 and 36 are utilized within the chamber 10 to deflect the sand and air downwardly after the occurrence of bombarding to the bottom of the chamber 10 whereupon, in well known fashion, the collector 22 is operative to draw the sand through the conduit 37 back to the collector 22 from which the sand may be recycled.

In some instances, it is desirable to abrade or otherwise finish the paper after bombardment to eliminate projecting fibers or superficially adherent particles.

In these instances roll 11 carrying an abrasive material on its surface is rotated against the continuously advancing web effective to remove by abrasion the undesirable fibrous projections. Where the web being treated is cigarette paper, as in the exemplary embodiment, it is found desirable to package the treated paper in bobbins of relatively narrow widths.

Consequently, a series of slitting knives 38 are arranged over an anvil roll 39 effective to slit the paper longitudinally in continuous fashion.

Referring now to the FIG. 2 embodiment of the invention, there is disclosed schematically a modification of the apparatus of FIG. 1 wherein a supply roll 41 paying off a web 42 is continuously passed around anvil rolls 43 and 44 so that both surfaces of the web 42 may be bombarded in sequential fashion by the action of two groups of guide tubes referenced 46 and 47, respectively.

In effect, then, the method of the present invention embraces the continuous advance of a web of sheet material, such as paper or plastic film, over an anvil roll and the bombardment of the sheet or film in the region of the roll and while backed by the roll with a continuous

stream of solid particles, such as sand, effective to create a random dispersion of microscopic rents in the paper.

The method also embraces the concept of bombarding both sides of a continuously advancing web in sequential fashion.

It is anticipated that a wide variety of embodiments of the present invention may be devised without departing from the spirit and scope thereof.

What is claimed is:

1. An apparatus for increasing the air permeability of webs such as cigarette paper without altering in a substantial way the tensile strength or burning rate of the paper, said paper being packaged in web rolls comprising a supply roll and a take-up roll, a cylindrical anvil for supporting the web as it passes from the supply roll to the take-up roll, jet means for guiding solid particles toward the web while backed by the anvil, said solid particles having a size such that the particles will pass through a 50 mesh screen but will be retained upon an 80 mesh screen conveyor means including a distributor cooperating with the jet means for introducing the solid particles to the jet means whereby the solid particles are dispersed upon the web effective to create microscopic rents or openings in the web, an abrading roll in contact with the web for removing projections and superficial solid particles and slitting means for cutting the web longitudinally to convert the web into bobbins.

2. An apparatus for increasing the air permeability of webs such as cigarette paper without altering in a substantial way the tensile strength or burning rate of the paper, said paper being packaged in web rolls comprising a supply roll and a take-up roll, a cylindrical anvil for supporting the web as it passes from the supply roll to the take-up roll, jet means for guiding solid particles toward the web while backed by the anvil, conveyor means including a distributor cooperating with the jet means for introducing solid particles to the jet means whereby solid particles are dispersed upon the web effective to develop microscopic openings in the web.

References Cited by the Examiner

UNITED STATES PATENTS

1,125,232	1/15	Weyl	51—319
1,974,967	9/34	McCrery	51—8 X
2,201,481	5/40	Dollahite	93—1
2,218,674	10/40	Eaton.	
2,666,282	1/54	Peterson	51—318
2,684,785	7/54	Waldorf et al.	222—330 X
2,995,481	8/61	Muller.	

FRANK E. BAILEY, *Primary Examnier.*

BERNARD STICKNEY, *Examiner.*