US 20050192867A1

(19) United States

(12) Patent Application Publication (10) Pub. No.: US 2005/0192867 A1

Haitsuka et al. (43) Pub. Date: Sep. 1, 2005

(54) INDEPENDENT INTERNET CLIENT OBJECT WITH AD DISPLAY CAPABILITIES

(76) Inventors: **Stacy Haitsuka**, Oak Park, CA (US); **Ronald Burr**, Agoura, CA (US); **Harold MacKenzie**, Los Angeles, CA (US); **Marwan Zebian**, Agoura, CA (US); **Terry Warren**, Santa Ana, CA (US); **Shane Blaser**, Camarillo, CA (US)

Correspondence Address:
SoCAL IP LAW GROUP LLP
310 N. WESTLAKE BLVD. STE 120
WESTLAKE VILLAGE, CA 91362 (US)

(21) Appl. No.: **11/111,357**

(22) Filed: **Apr. 20, 2005**

Related U.S. Application Data

(63) Continuation of application No. 09/348,411, filed on Jul. 7, 1999.

Publication Classification

(51) **Int. Cl.**[7] **G06F 15/16**

(52) **U.S. Cl.** **705/14**

(57) ABSTRACT

There is disclosed a client application for enabling access to an online service that displays advertisements while the user is accessing the online service and/or the Internet or other network. The client application may receive play lists from the online service provider. The play lists may include information about advertisements to be played and the order of play. The client application may display advertisements continuously while the user is connected to and/or using the online service and/or the Internet or other network.

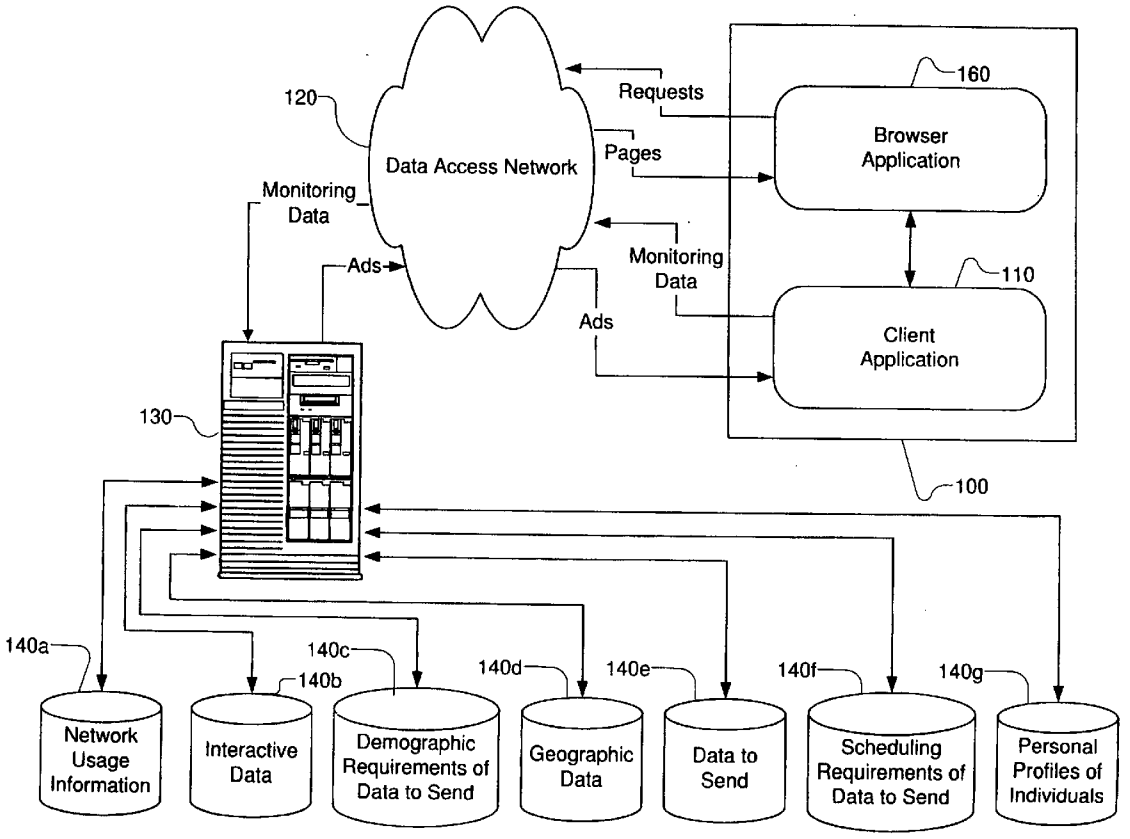

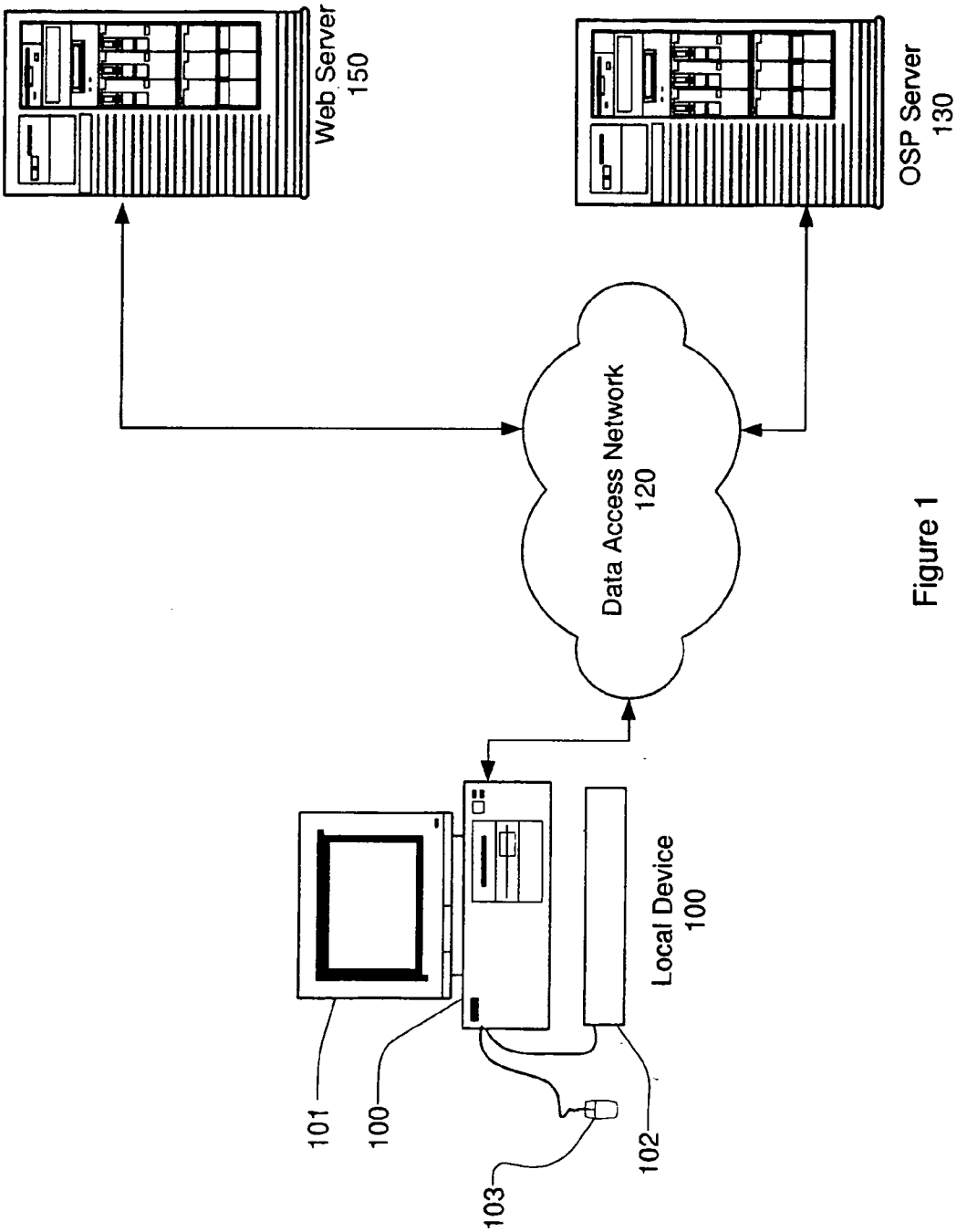
Web Server
150
OSP Server
130
Data Access Network
120
Local Device
100
101
100
102
103

Figure 1

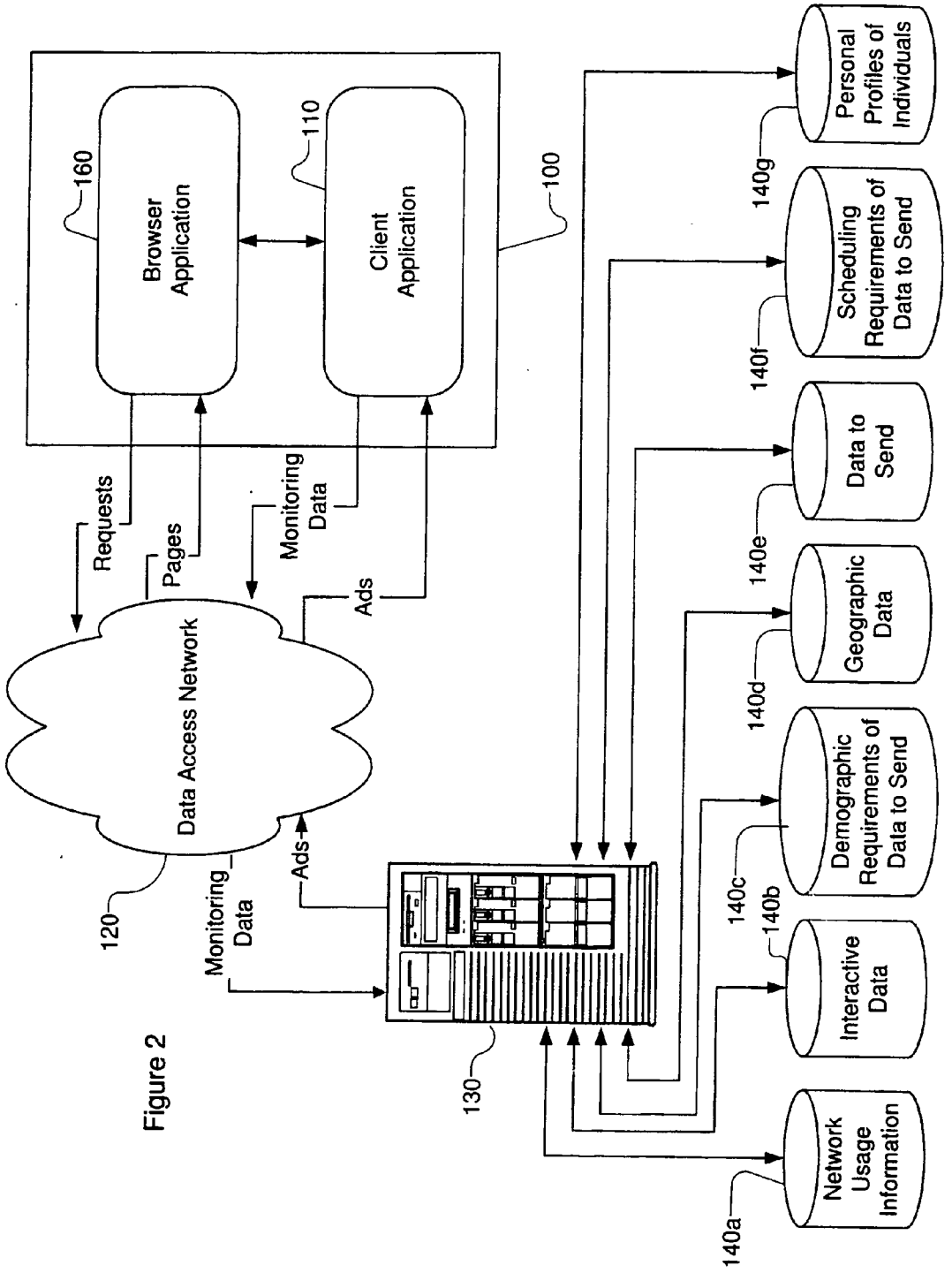
Browser Application
160
Client Application
110
100
Requests
Pages
Monitoring Data
Ads
Data Access Network
120
Monitoring Data
Ads
130
Personal Profiles of Individuals
140g
Scheduling Requirements of Data to Send
140f
Data to Send
140e
Geographic Data
140d
Demographic Requirements of Data to Send
140c
Interactive Data
140b
Network Usage Information
140a

Figure 2

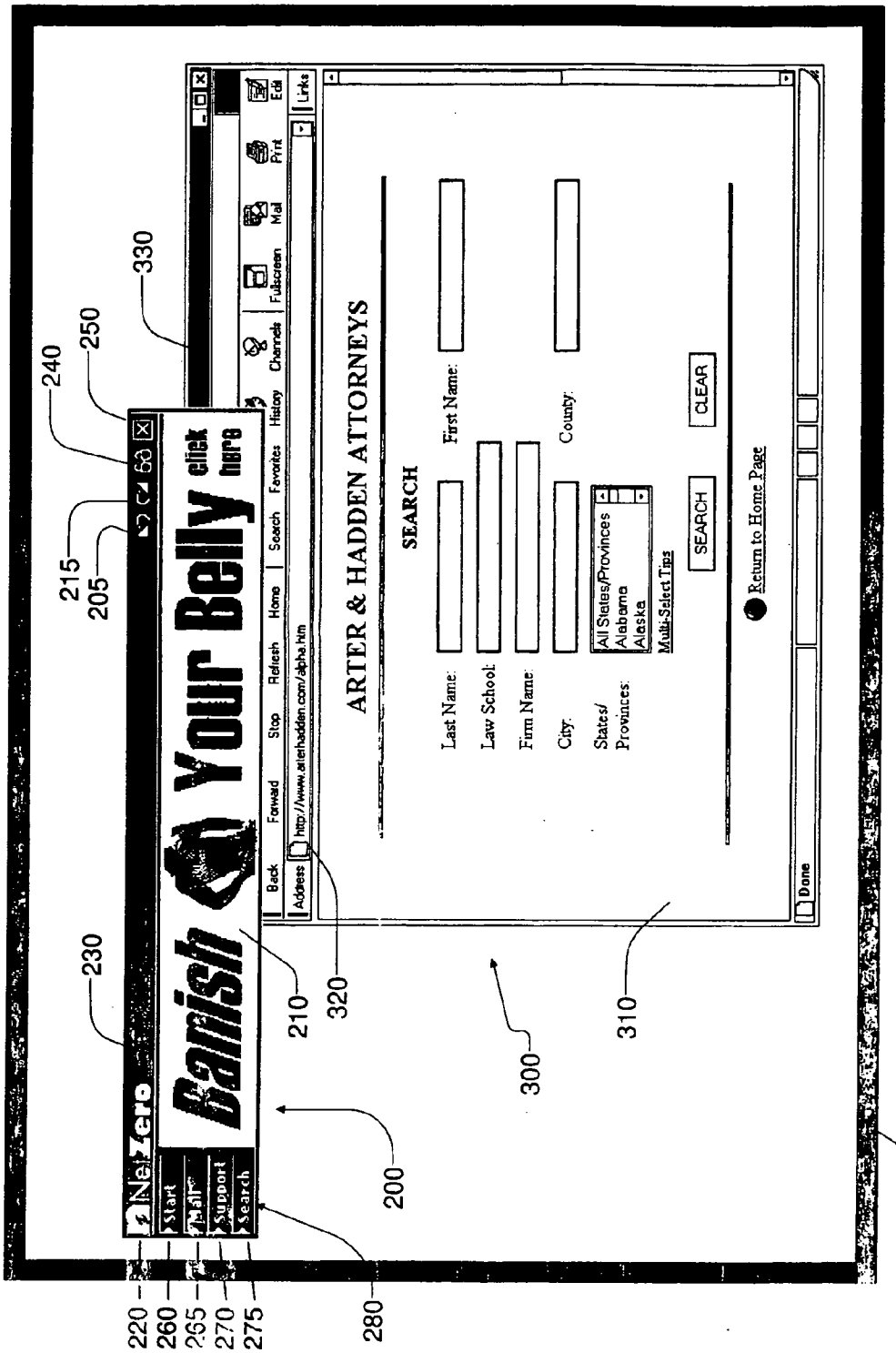
ARTER & HADDEN ATTORNEYS
SEARCH
Last Name:
First Name:
Law School:
Firm Name:
City:
County:
States/ Provinces:
All States/Provinces
Alabama
Alaska
Multi-Select Tips
SEARCH
CLEAR
Return to Home Page
Done
Address
http://www.arterhadden.com/alpha.htm
Back
Forward
Stop
Refresh
Home
Search
Favorites
History
Channels
Fullscreen
Mail
Print
Edit
Links
click here
Your Belly
Banish
NetZero
Start
Mail
Support
Search
101
200
210
215
205
220
230
240
250
260
265
270
275
280
300
310
320
330

Figure 3

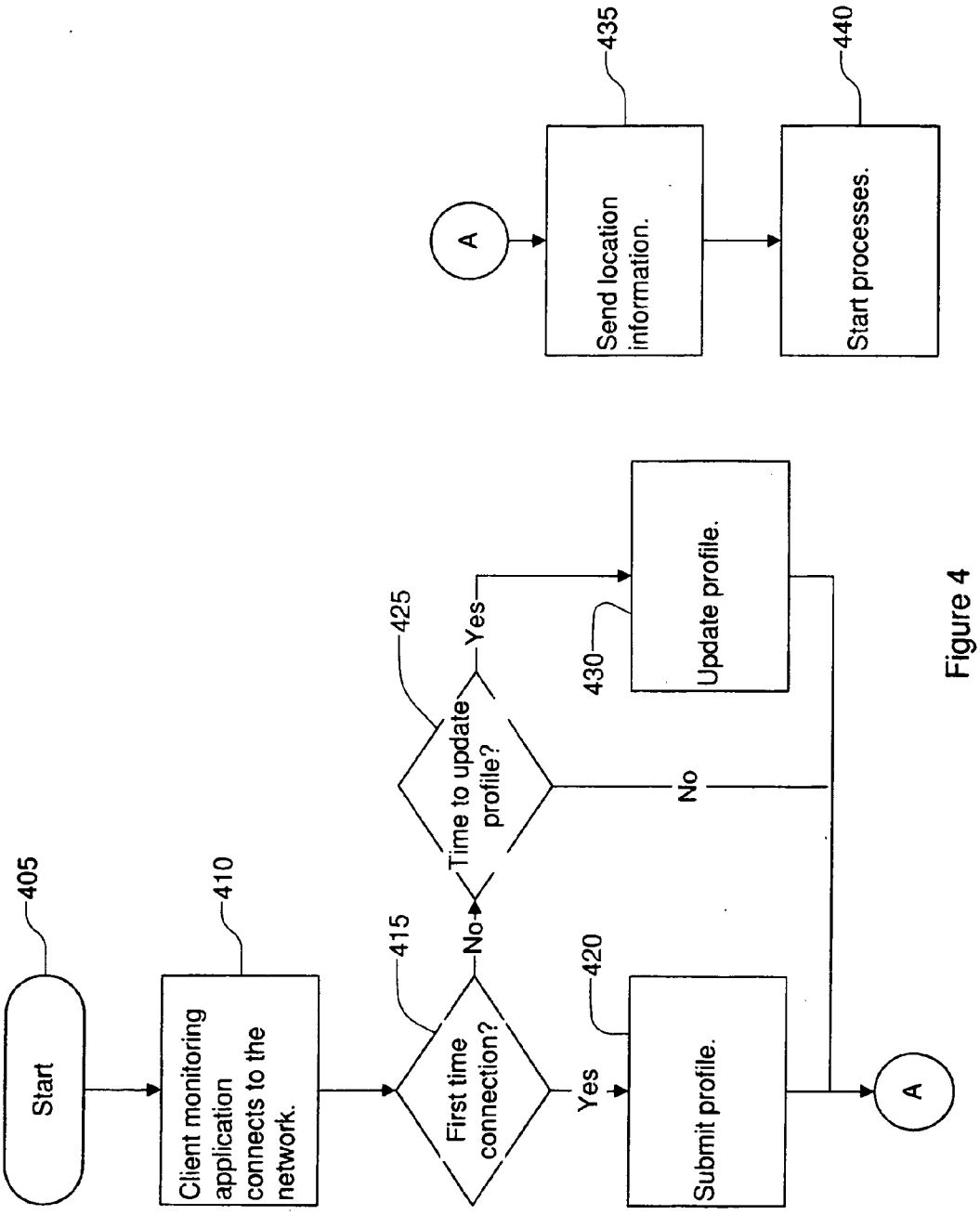
Start
405
Client monitoring application connects to the network.
410
First time connection?
415
Yes
No
Submit profile.
420
Time to update profile?
425
Yes
No
Update profile.
430
A
Send location information.
435
Start processes.
440
A

Figure 4

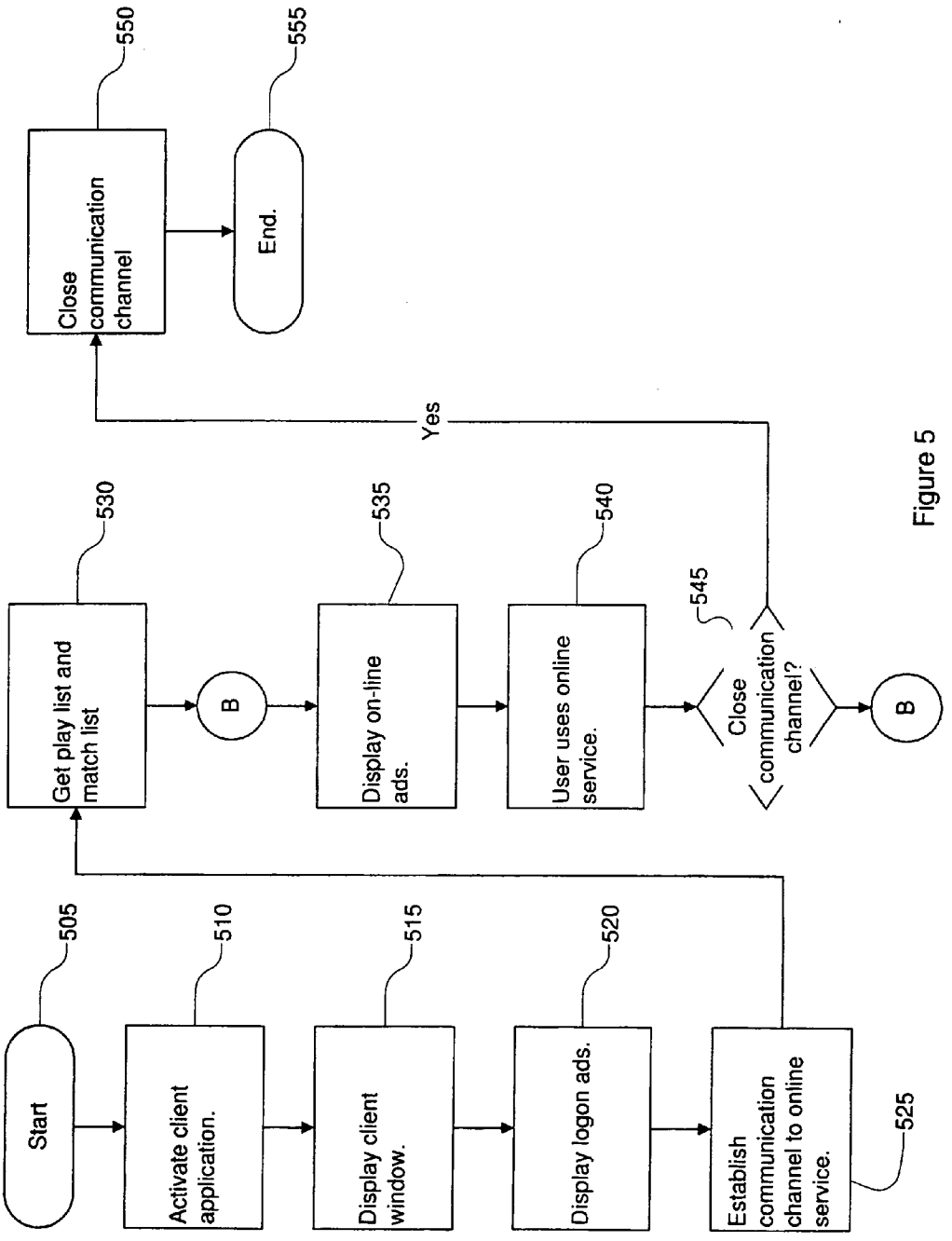
Start
505
Activate client application.
510
Display client window.
515
Display logon ads.
520
Establish communication channel to online service.
525
Get play list and match list
530
B
Display on-line ads.
535
User uses online service.
540
Close communication channel?
545
Yes
B
Close communication channel
550
End.
555

Figure 5

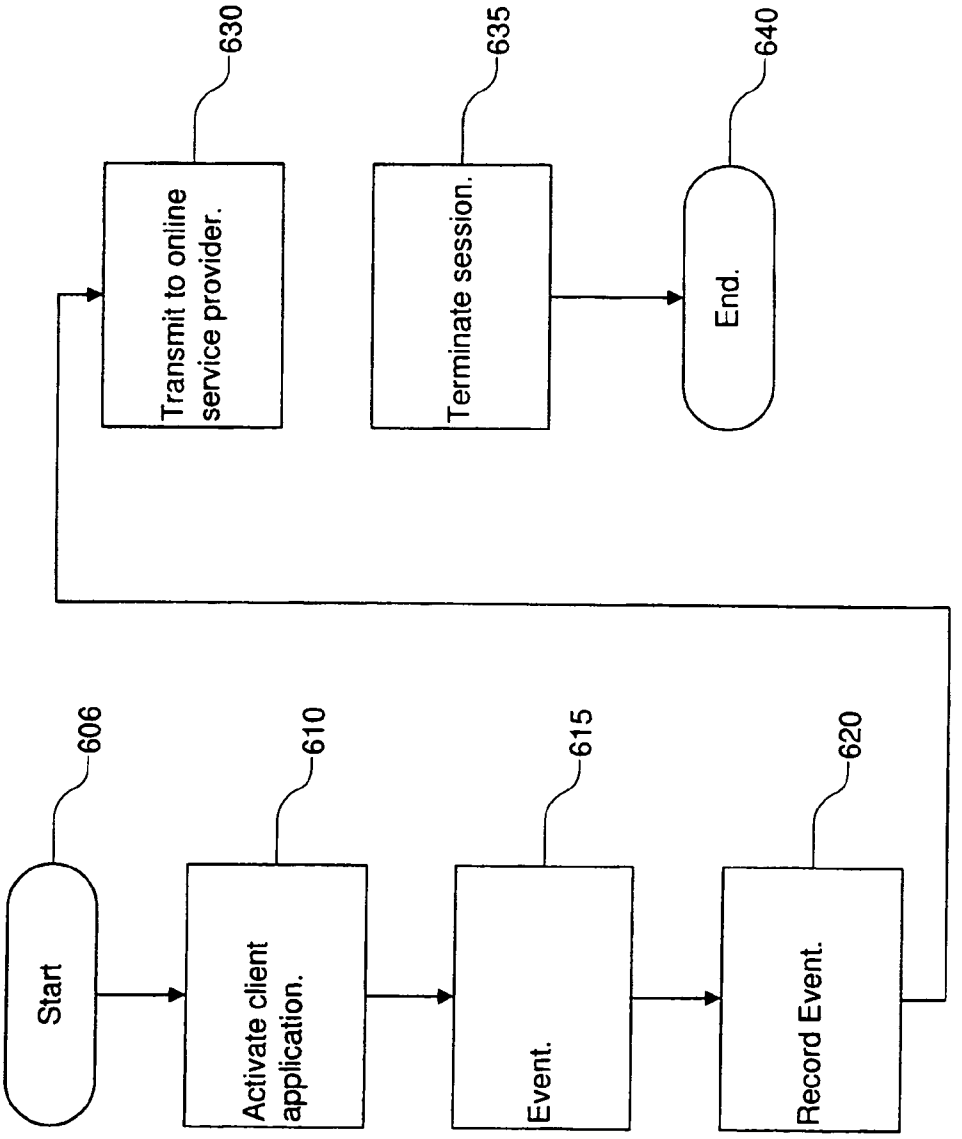
606
Start
610
Activate client application.
615
Event.
620
Record Event.
630
Transmit to online service provider.
635
Terminate session.
640
End.

Figure 6

INDEPENDENT INTERNET CLIENT OBJECT WITH AD DISPLAY CAPABILITIES

NOTICE OF COPYRIGHTS AND TRADE DRESS

[0001] A portion of the disclosure of this patent document contains material which is subject to copyright protection. This patent may show and/or describe matter which is or may become trade dress of the owner. The copyright and trade dress owner has no objection to the facsimile reproduction by any one of the patent disclosure as it appears in the Patent and Trademark Office patent files or records, but otherwise reserves all copyright and trade dress rights whatsoever.

RELATED APPLICATION INFORMATION

[0002] This application is a continuation of application Ser. No. 09/348,411 filed Jul. 07, 1999 entitled "Independent Internet Client Object With Ad Display Capabilities," which is incorporated herein by reference.

[0003] This application is related to application Ser. No. 09/265,512 filed March 9, 1999 entitled "Network Data Distribution Based Upon User-Specific Qualities," which is incorporated herein by reference, and which claims priority in part from Application No. 60/077,331 filed Mar. 9, 1998 entitled "Network Data Distribution Based Upon Geographic Location, Usage Patterns, Interactive Data, Profile Data, Demographic Data and Scheduling Information."

[0004] This application is related to U.S. Pat. No. 6,366,298 filed Jun. 3, 1999 and issued Apr. 2, 2002 entitled "Monitoring of Individual Internet Usage," which is incorporated herein by reference.

BACKGROUND OF THE INVENTION

[0005] 1. Field Of The Invention

[0006] The invention relates to the display of advertisements to a user of an online service.

[0007] 2. Description of the Related Art

[0008] Online services today offer a variety of services to their users. Users may access news, weather, financial, sports, and entertainment services, participate in and retrieve information from online discussion groups, and send and receive email. A user of an online service typically accesses the service using specialized communication software (i.e., client application or client software) that establishes and manages a connection from the user's computer (or client) to the online service provider's host computers (or servers) and facilitates the user's interactions with the service.

[0009] In addition to managing the connection, there is provided software to display pages or screens relating to retrieved content according to views or presentations specific to the online service. This software may be integrated with the client application. The functionality of the content and the user interface (i.e., icons, dialog boxes, menus, etc.) for interacting with the content are typically dictated by various standards.

[0010] Interactions between the user's computer and the online service are facilitated by a variety of software protocols (i.e., communication conventions, rules and structures), including application level protocols, for managing the transfer of data across the network and to the client application on the user's computer. A protocol may be proprietary or exclusive to an online service such that only client software from the online service provider may be used to communicate with the server software. For example, an online service provider that supports electronic mail, discussion groups, chat groups, news services, etc. may define and use specific protocols for each type of service so that appropriate information is exchanged between the participants (i.e., clients and servers). Each application-specific protocol may be based on a common, underlying protocol.

[0011] The Internet and World Wide Web ("Web"), comprised of a vast array of international computer networks, many provide online service users with considerable information resources and other content. Typically, this content is accessed using a web browser, such as Microsoft Internet Explorer or Netscape Navigator, capable of understanding the HyperText Markup Language (HTML) used to create the documents found on the Web and the HyperText Transfer Protocol (HTTP) used to navigate the Web. Email and Usenet discussion groups are typically accessed through companion software to the browser. Although web browsers typically have varying levels of functionality or sophistication, retrieved content is displayed in content pages according to views or presentations specific to the web document currently presented by the web browser. Typically, the views and presentations are different than those provided by the communication software from the online service provider because the web browser is, in fact, a separate client application displaying web documents containing presentation directives.

[0012] When using a browser, the browser issues HTTP messages to request web pages. A requested web page is typically identified using its URL—uniform resource locator. The URL is a reference (or address) to a resource available on a TCP/IP network such as the Internet. A URL is composed of a character string, and may have a number of parts. These parts include a top level domain name, second level domain name, directory name, and file name. URLs may identify a file located on a web server. URLs may also point to other resources on the network such as database queries and command output. The determination and use of URLs is well known in the art and is not discussed further herein.

[0013] In some portions of this disclosure, the term "resource locator" is used. The term is defined as a string or code which uniquely identifies a resource on a network. Thus, the URL is a species of resource locator.

[0014] There are a number of types of online service providers. Online services may serve the general public or may serve a limited class of individuals. Some public OSPs utilize proprietary networks; America Online and @Home are examples. Other public OSPs use the public networks, and most Internet Service Providers (ISPs) are an example. OSPs often provide Internet access. Internet access is the primary service provided by some OSPs, most notably ISPs.

[0015] Users typically connect to an OSP using a computer with a communications device such as an analog modem, an Ethernet adapter, DSL adapter or cable modem. Such connections may be analog or digital, dial-up or constantly-connected. Subscribers typically pay a fee for

their subscriptions to OSPs. These fees typically are in the form of a sign-up fee, plus online charges which are fixed (i.e., unlimited monthly access for a fixed fee) or based upon the amount of time the user is connected to the online service. The fees generally increase with bandwidth.

[0016] Some online service providers have derived revenue by displaying advertisements for third parties (hereinafter, "advertisements") to users. For example, when a user accesses a web page on the Web, an advertisement may be displayed to the user as part of the web page. Advertisements are also shown to users of some proprietary online services. Typically in such systems, each user accessing a certain screen or site is shown the same advertisement. Sophisticated systems have the capability to change the advertisement after a certain period of time.

[0017] Some attempts have been made to provide advertising-supported online services, including Internet access, on a free or heavily discounted basis. Typically, these online services required the user to use a special client application for connecting to the online service. The client application typically causes an advertising window to be displayed on the user's display. This advertising window remains visible and on top of other windows throughout the entire online session. The client application receives advertisements from the online service provider, and the client application displays the advertisements in the advertising window. It is unknown to the inventors, however, whether the transmission of advertisements from the online service provider to the client application is initiated by the online service provider or the client application, how the online service determines which advertisements to send to the users, and whether such typical client applications do anything more than open the communications link with the online service and display advertisements.

[0018] In one advertising based Internet service called Bigger.net, the client application periodically requested new advertisements from an ad server. A host computer monitored the time between such requests and terminated the connection if a preset period of time was exceeded. Bigger.net also had the ability to monitor network activity, though it is unclear how this was done.

[0019] Other advertising-supported online services have included: CyberFreeway, which used a client application developed by HyperNet, Inc. of Tokyo, Japan; Juno Online, which provided free email; Tritium and Freewwweb.

[0020] Advertisers find it desirable to target advertisements to relevant potential customers. For example, an advertiser of stockings would prefer to target women rather than men with its advertising. A Boston restaurant would prefer to target residents of Boston and business travelers rather than children living in San Francisco. Moreover, advertisers prefer to pay for advertising based upon the number of relevant consumers who are actually exposed to the advertisement. For typical online systems and networks, including the Web, it is often difficult for an advertiser to precisely determine whether its advertisements were actually viewed by a user and for how long, and whether the advertisement induced a response. Accordingly, there exists a need for a targeted advertisement system that also can provide information as to the characteristics of those who were exposed to each advertisement, for how long the user was exposed, and at what times.

[0021] It is believed that the prior art advertising-supported online services did not have the ability to target advertisements. Furthermore, their client applications are believed to have been limited in capabilities.

DESCRIPTION OF THE DRAWINGS

[0022] **FIG. 1** is a first block diagram of a network data distribution system in accordance with the invention.

[0023] **FIG. 2** is a second block diagram of a network data distribution system in accordance with the present invention.

[0024] **FIG. 3** is a representation of a display of a local device having a client window and a browser window.

[0025] **FIG. 4** is a flow chart of a method of monitoring web browsing by a user in accordance with the invention.

[0026] **FIG. 5** is a flow chart of a method of displaying advertisements to a user of an online service in accordance with the invention.

[0027] **FIG. 6** is a flow chart of a method of tracking advertisement-related events in accordance with the invention.

DETAILED DESCRIPTION OF THE INVENTION

[0028] Throughout this description, the embodiments and examples shown should be considered as exemplars, rather than limitations on the apparatus and methods of the invention.

[0029] Description of Systems

[0030] The system of the invention enables data, such as advertisements, to be sent to users based upon: the user's geographic location; the user's interactive data; the user's network usage data; the user's personal profile information; the scheduling requirements of the data to be sent; and the demographic requirements of the data to be sent.

[0031] Referring now to **FIG. 1**, there is shown a block diagram of a network data distribution system in accordance with the invention in conjunction with a source of web pages. **FIG. 1** includes a local device **100**, a data access network **120**, an OSP server **130** and a web server **150**. The local device **100**, the data access network **120** and the OSP server **130** comprise the network data distribution system. The local device **100** is provided online service to the network data distribution system under control of the OSP server **130**. An online service provider controls the OSP server **130**.

[0032] The local device **100** preferably comprises a client computer which is configured to access the OSP server **130** via the local access network **120**. The client computer may be, for example, a PC running a Microsoft Windows operating system. The local device **100** preferably includes an output device, such as display **101**, and an input device, such as keyboard **102** and/or pointing device **103** (e.g., mouse, track ball, light pen, or data glove). The local device **100** may also be, for example, an Internet appliance, network computer (NC), or an appropriately Internet-enabled device such as a portable digital assistant (PDA), mobile phone, refrigerator, etc. The particular type of device of the local device **100** is not considered to be important so long as the

local device **100** can provide some measure of individual user interactivity with an online service.

[**0033**] The data access network **120** provides lower layer network support for the local device **100** to interact with online service, including the OSP server **130** and the web server **150**. The data access network **120** preferably comprises a common or private bi-directional telecommunications network (e.g., a public switched telephone network (PSTN), a cable-based telecommunication network, a LAN, a WAN, a wireless network), coupled with or overlaid by a TCP/IP network (e.g., the Internet or an intranet).

[**0034**] The web server **150** may be of the type known in the art and has the ability to serve web pages to the local device **100**, as requested in the manner known in the art. It should be appreciated that the web server **150** is representative of any source of web pages available to the local device **100**. Thus, for example, the web server **150** could be accessible from the Internet, or it could be a part of an intranet and represents any number of web servers.

[**0035**] The OSP server **130** preferably is a computer system, such as a server computer. Alternatively, the OSP server **130** may be considered to represent a number of physical devices which as a group provide the indicated network services. The OSP server **130** acts as a recipient of certain information transmitted by the local device **100**, as described further below. The OSP server **130** preferably also transmits certain data to the local device **100** as described further below.

[**0036**] Referring now to **FIG. 2**, there is shown a block diagram of a network data distribution system of an online service in accordance with the present invention. The system comprises a client application **110**, the data access network **120**, the OSP server **130** and data stores **140***a-g* (collectively, **140**). A browser application **160** is also shown. A "browser application" is software which provides interactive utilization of hypertext objects located on a network, such as web pages on the Internet. As used herein, "browser application" also includes most email clients and ftp clients. The client application **110** is a program operative on local device **100**, and preferably an independent application program or a DLL. The client application **110** preferably retrieves certain network data, displays certain network data, transmits geographic location data, transmits interactive user data, transmits network usage data and transmits personal profile information as described below. The client application **110** preferably also sets up and provides access to the online service. The data stores **140** store and provide this geographic information data **140***d*, network usage data **140***a*, interactive usage data **140***b*, personal profile information **140***g*, data to be sent **140***e*, schedule for transmitting data **140***f* and demographics for transmitting data **140***c*.

[**0037**] The browser application **160**, such as Microsoft Internet Explorer or Netscape Navigator is preferably installed on the local device **100**. When the local device **100** is connected to the web server **150** through the data access network **120**, the user of the local device browses the web server **150** from the local device **100** using the browser application. The browser application itself need not be stored on the local device **100**. The important aspect is that the user, from the local device **100**, can exercise control over what web pages are requested and thus displayed by the local device **100**.

[**0038**] Each time a user uses the local device **100** to connect to the online service, the client application **110** and the OSP server **130** establish a session. In this session, the client application **110** transmits certain information regarding the user of the local device **100** and his use of the local device **100** while connected to the online service. The OSP server **130**, on the other hand, uses the information from the client application **100** to determine information which should be sent to the client application **110**. Preferably, the information from the client application **110** is used by the OSP server **130** to select advertisements which the local device **100** should display. The client application **110** then causes these advertisements to be displayed on the local device's output device **101**.

[**0039**] The information from the client application **110** regarding the user preferably includes geographic data and personal profile information. Geographic data indicating the user's current location preferably is sent from the client application **110** to the OSP server **130**, which then stores the geographic data in the data store **140***d*. This geographic data can be something simple, like a phone number. The user preferably provides personal profile information on a periodic basis which is stored in the data store **140***g* and used by the OSP server **130**. This information consists of (but is not limited to) things such as: age, sex, marriage status, home address and personal interests.

[**0040**] The information regarding the user's use of the local device **100** includes email usage, web usage and advertisement click-throughs. The user's interactions and feedback with the web server **150** provided through the browser application **160** are preferably captured by the client application **110**, analyzed by the OSP server **130** and stored in the data store **140***b*. This includes the user's feedback and responses to the data delivered to the browser application **160**. The user's activities on the web server **150** provided through the browser application **160** are preferably captured by the client application **110**, analyzed by the OSP server **130** and stored in the data store **140***a*. This includes the type of network data the user requests and accesses. This data is preferably summarized and classified into multiple demographic profiles.

[**0041**] The data to be sent to users preferably has scheduling requirements that dictate when it should be sent. These scheduling requirements include (but are not limited to): frequency, maximum number of times to send to an individual, minimum number of times to send to an individual, time of day to send, and first and last days to send. The data to be sent to users can have demographic requirements that dictate to whom it should be sent. These include (but are not limited to): personal profile, interactive data, network usage information and geographic location.

[**0042**] Referring now to **FIG. 3**, there is shown the display **101** having a client window **200** and a browser window **300**. The client window **200** is generated and controlled by the client application **110**. The browser window is generated and controlled by the browser application **160**, here Microsoft Internet Explorer. The browser window **300** is familiar to those skilled in the art, so the particulars are not described further herein. Further information regarding the use of most browser applications and their technical specifications is abundantly available.

[**0043**] The client window **200** includes a title bar **230**, an advertising pane **210**, a number of operational icons **205**,

215, **220**, **240**, **250** on the title bar **230**, and a number of button bar icons **260**, **265**, **270**, **275** on a button bar **280**. The title bar **230** preferably identifies the name of the OSP. The advertising pane **210** is a space in which the client application **110** displays advertisements.

[**0044**] The button bar icons **260**, **265**, **270**, **275** preferably provide one-click access to Web pages and/or menus that might be useful to the user. The online service provider can sell the button bar icons to third parties as an additional revenue source. These icons **260**, **265**, **270**, **275** are associated with particular URLs. The icon **260** is associated with a start page. The icon **265** is associated with an online shopping mall page. The icon **270** is associated with an online technical support page from the online service provider. The icon **275** is associated with an online search engine page. By clicking on any of these icons **260**, **265**, **270**, **275**, the client application **110** causes the browser application **160** to load the Web page having the URL associated with the selected icon.

[**0045**] The operational icons **205**, **215**, **240**, **250**, **280** on the title bar **230** preferably provide one-click access to operational features of the client application **110**. As explained below, the client application **110** maintains records of the advertisements which have been displayed. The cycle back icon **205** allows the user to review advertisements which were previously displayed by the client application **110**, in the reverse order in which the advertisements were displayed. If the user has cycled back through advertisements, the cycle forward icon **215** allows the user to review advertisements in the order in which the advertisements were displayed by the client application **110**. The search icon **240** provides convenient access to online searching facilities. The close icon **250** causes the client window **200** to close, and thus also causes the session with the online service to terminate.

[**0046**] The menu icon **280** provides access to a menu of additional menu items and functions. The menu preferably provides alternative and enhanced access to the features associated with the button bar icons **260**, **265**, **270**, **275** and the other operational icons **205**, **215**, **240**, **250**. In addition, the menu preferably provides the user with the ability to hide or show the title bar **230** and/or the button bar **280**. The menu preferably also allows the user to access and edit his profile. The menu preferably provides the user with the option of positioning the client window **200** at any of a number of predefined positions, such as top left corner of the display **101**, top right corner, bottom left corner, or bottom right corner.

[**0047**] The browser window **300** includes a display pane **310**, an address bar **320** and a title bar **330**. The display pane **310** is a region of the browser window **300** wherein the browser application causes web pages received by the browser application to be displayed. The address bar **320** is another region of the browser window **300** and the browser application displays URLs in the address bar **320** corresponding to the web page currently displayed in the display pane **310**. The user can also enter a URL into the address bar **320**, and the browser application will attempt to load the web page or other object to which the entered URL points. The primary feature of the title bar **330** is that it displays the title of the browser application. Another feature of most browsers is that the title bar **330** displays the title of the web page then displayed in the display pane **310**.

[**0048**] The client window **200** is displayed on top of the browser window **300**. Preferably, the client window **200** remains visible and on top of all other windows so long as the communication channel to the OSP server **130** is open. The client application **110** preferably can control the location of the client window **200** on the display **101**. For example, the client application **110** preferably allows the user to select one of several predefined locations for the client window **200**, such as lower left corner, upper right corner, etc. Some operating systems such as Microsoft Windows permit windows to be moved to the edge of the display **101** so that only a small portion of the window is visible. The client application **110** preferably can also prevent the client window **200** from being moved off of the visible area of the display **101**. When the user attempts to hide all or a part of the client window **200**, the client window preferably moves the client window **200** to a fully visible area of the display **101**.

[**0049**] Description of Methods

[**0050**] Referring now to **FIG. 4**, there is shown a flow chart of a method of distributing data in a network in accordance with the invention. The components **110**, **120**, **130**, **140** work together to deliver data that meets the geographic and demographic criteria.

[**0051**] After the method begins (step **405**), the user preferably uses the client application **110** to connect to the data access network **120**, and then the OSP server **130** (step **410**). The particular manner of the connection depends on the network infrastructure underlying the connections. The important aspect of this step **410** is that a communications channel is established between the client application **110** and the OSP server **130**. By "communications channel," it is meant a logical path for data transmission. The OSP server **130** preferably acts as a gatekeeper to the online services. Only after the OSP server **130** has authorized access can the local device **100** access the web server **150** and the other resources of the online service.

[**0052**] The communication channel may be of two varieties—dial-up or constant-connection. In a dial-up communication channel, the connection to the online service becomes available only after the local device **100** creates a physical link to the online network and then a logical link to the online network. For example, the local device **100** has a -up communication channel if the local device **100** has a modem and connects through tone dialing to the online service using the PSTN. In a constant-connection communication channel , the connection to the online service is always available to the local device **100**, and the local device need only create a logical link to the online network. For example, the local device **100** has a constant-connection communication channel when the local device **100** has a cable modem and connects to the online service using a cable service.

[**0053**] If this is the first time the user has connected (step **415**), then the OSP server **130** preferably requires the user to use the local device **100** to submit personal profile information (step **420**). Preferably, the OSP server **130** periodically will request (step **425**) that the client application **110** have the user update this profile (step **430**).

[**0054**] Each time the local device **100** connects to the OSP server **130**, the OSP server **130** preferably obtains data

indicating the local device's current geographic location (step **435**). This geographic information is preferably derived from a local access phone number used by the client application **110** to connect to the data access network **120**, and the client application **110** transmits its local access phone number to the OSP server **130** for geographic determination purposes.

[**0055**] Once connected, a number of processes are preferably started (step **440**). In one of these processes, whenever the user interacts with data received on the client application **110**, the client application **110** sends feedback information respecting this interaction to the OSP server **130**. The OSP server **130** then summarizes and classifies the feedback information into demographic profiles stored in the data store **140**.

[**0056**] In another of these processes, whenever a user uses the browser application **160** to request or access data from the web server **150**, the client application **110** sends feedback information respecting these requests and data accesses to the OSP server **130**. The OSP server **130** then summarizes and classifies this feedback information into the demographic profiles in the data store **140**.

[**0057**] In another of these processes, while a user's local device **100** is connected to the web server **150**, the OSP server **130** determines which targeted data needs to be sent to the client application **110** and then transmits this targeted data to the client application **110**. The OSP server **130** accomplishes this by:

[**0058**] examining the scheduling requirements to determine which data needs to be sent;

[**0059**] examining the demographic requirements of the data to determine to which demographic profiles the data needs to be sent;

[**0060**] selecting the users who are currently connected that meet the demographic requirements of the data; and

[**0061**] sending the data to the selected users.

[**0062**] As mentioned, one of the processes relates to the display of data, and particularly advertisements, in the client window **200**. Methods of displaying advertisements to a user of an online services are described next.

[**0063**] Referring now to **FIG. 5**, there is shown a flow chart of a method of displaying advertisements to a user of an online service in accordance with the invention. This method generally involves the display of advertisements during a logon process and then also during usage of the online service.

[**0064**] After the method begins (step **505**), the client application is activated (step **510**). The client application **110** may be installed during manufacture of the local device **100**, during use of the local device **100** at the instigation of the user, or may occur automatically as a consequence of other processes. Furthermore, the client application **110** may be activated either manually or automatically. Although at least some aspects of the client application **110** should be operable from the local device **100**, the client application **110** need not be stored on the local device **100** and can be run from a remote location.

[**0065**] Preferably, after the client application **110** is activated, the client application **110** displays the client window **200** on the display **101** (step **515**). In the next step (step **520**), the client application **110** displays advertisements in the ad pane **210**. In the case of dial-up and constant-connection communication channels, the communication channel to the online service might not yet be established or fully open at this point. Thus, the client application **110** cannot obtain the advertisements from the online service. Instead, the client application **110** obtains the advertisements locally. For example, during installation of the client application **110** one or more advertisements are installed on the local device **100** for display outside of a session. Alternatively, the advertisements may be downloaded to the local device at the beginning of a session, during a session, or as part of the termination of a session.

[**0066**] Where it is not desired to display advertisements prior to full establishment of the communication channel, then it is preferred also that the ad pane **210** not be displayed. In such embodiments, it might be desirable to provide a different configuration of the client window **200** than that shown in **FIG. 3**. For example, the client window **200** might show the status of the connection process.

[**0067**] The client application **110** preferably includes an ad display process which is responsible for displaying advertisements in the ad pane **210**. The ad display process preferably operates in accordance with a play list. The play list comprises one or more ad objects. The ad objects are preferably data constructs which each include a resource locator of an advertisement to be displayed, a resource locator to be accessed if the user clicks on (or otherwise selects) the advertisement when displayed in the ad pane **210**, and a number of attributes for the display of the advertisement. The display attributes may be one or more of, for example: fade, wash, sweep, fly, blinds, box, checkerboard, crawl, dissolve, peak, spiral, split, stretch, strips, swivel, wipe, zoom. These types of display attributes are well known (though not necessarily with respect to online services) and are therefore not described further herein. The ad objects preferably also specify how long the advertisement should be displayed. Other display attributes are within the scope of the invention. The play list preferably specifies an order in which the advertisements identified in the play list are to be displayed.

[**0068**] Typically, advertisements in the online industry are associated with a resource locator, and more typically with a URL. As is well known, when a user uses his pointing device **103** to click on an online advertisement in a browser's window such as browser window **300**, the browser application loads the resource at the associated URL. This is commonly known as "click-through." In accordance with the invention, if during the display of an advertisement in the ad pane **210**, the user clicks-through on the advertisement, then the client application **110** causes the resource locator associated with the advertisement to be loaded by the browser application **160**. If the browser application **160** is not open at the time, then the browser application is first opened and then pointed to the resource locator associated with the advertisement. If the resource locator is not for a web page, the client application **110** or some other software in the local device **100** preferably causes the appropriate application to open so that the resource locator may be opened.

[0069] Preferably, the client application **110** displays advertisements from the time that the client application **110** is activated. To accomplish this, the client application **110** preferably is provided with a logon play list for use before the communication channel with the OSP server **130** is open. The client application **110** preferably is also provided with the advertisements referenced in the logon play list. The logon play list is preferably stored on the local device **100** during installation of the client application **110**. Subsequently, during each session with the online service, the OSP server **130** provides a new logon play list and the advertisements referenced by the new logon play list to the client application **110** for use by the client application **110** during the next logon. The OSP server **130** can transmit the new logon play list in any of several ways, such as part of establishment of the communication channel to the OSP server **130**, during the user's session with the online service, or as part of the closing of the communication channel. The latter is preferred, since it proves the online service provider with the best targeting control.

[0070] It should also be appreciated that, where there is a constant-connection communication link, a logon play list can be communicated from the OSP server **130** to the client application **110** at any time. Similarly, in some dial-up environments, such as ISDN, a logon play list can be communicated from the OSP server **130** to the client application **110** at any time using signaling channels or other off-line means.

[0071] In the next step (step **525**), the client application **110** establishes a communication channel to the online service. With the communication channel established, the client application **110** can now receive a new play list from the OSP server **130** (step **530**). This online play list can reference advertisements which are in the data access network **120**. In some embodiments, it may be desirable for the OSP server **130** to transmit additional or replacement play lists and/or ad objects to the client application **110**.

[0072] The client application **110** preferably also receives from the OSP server **130** a match list. The match list comprises one or more match objects. The match objects each comprise an activity identifier and an ad object. The match list guides the client application **110** to display certain advertisements notwithstanding the play list. The activity identifier preferably comprises resource locators and keywords which are used for targeting advertising to the user. The activity identifier may also be an object which altogether describes an online activity in which the user may become involved, such as email or chat.

[0073] During the user's session with the online service, the client application **110** preferably monitors the user's interaction with the data access network **120**. If the user's interaction with the network matches one of the activity identifiers in the match list, then the ad display process displays the advertisement of the ad object corresponding to the matched activity identifier. Methods for monitoring the online activities of an online user are described in the related application referenced above.

[0074] The client application then displays advertisements in accordance with the on-line play list and the match list (step **535**), and this continues while the user uses the online service (step **540**).

[0075] As an example of the use of the match list, if the user points his browser application **160** to a Web site which the online service provider has previously identified to relate to sale of automobiles, then the online service provider preferably would run an advertisement targeting a potential purchaser of an automobile. The Web site may be identified from its URL, and if the URL is an activity identifier in the match list, the client application **110** can cause the appropriate advertisement to be displayed.

[0076] As another example, the user might go to a search engine which is known to the online service provider, and search for information about the sale of automobiles based upon the keywords "automobile sales." The client application **110** preferably checks if the keywords sent to these selected search engines are activity identifiers in the match list. If so, then the client application **110** preferably displays the appropriate advertisement.

[0077] At some point, the user's online session will end. To manually close the session, the user can select icon **250** in the client window **200** (**FIG. 2**). The client application **110** preferably provides the user with the opportunity to confirm the closing of the session (step **545**). If the user cancels closure, then the method continues at step **535**. If the user confirms closure, then the client application **110** closes the communication channel to the online service (step **550**), and the method ends (step **555**).

[0078] In addition to manual closure, the client application **110** preferably can automatically close the communication channel. In the case of a dial-up connection, the client application **110** preferably can detect inaction by the user. This inaction may be with respect to the data access network **120**, or more preferably, with respect to the client application **110**. If the user has been inactive for a predetermined period of time, then the client application **110** preferably displays a dialog on the display **101** in which the user is given some period of time to request that the session be continued.

[0079] In the case of a constant-connection communication channel, the client application **110** preferably monitors the user's activity with the local device **100** with respect to the online service and thereby detects whether the user is interacting with the online service. Like a screen saver in reverse, the client application **110** detects some period of inactivity and causes the client window **200** to be closed. Alternatively, the client window **200** could remain on the display even when the user's session is terminated, but the client application **110** would allow other windows to be displayed on top of the client window **200**. If the user desired to open a session with the online service, the client window **200** would again have to be on top of all other windows, either through automatic or manual means.

[0080] As can be seen, this process permits browsing by the user and displaying of advertisements by the client application **100** without interfering with the user's use of the browser application.

[0081] In addition to the display of advertisements, the client application **110** preferably records a number of types of events and transmits these records to the OSP server **130**. Tracked events fall into three categories: connection events, advertising events, and operational events. Referring now to **FIG. 6**, the event tracking capabilities of the client application **110** are described. Event tracking begins after the client application **110** is activated (step **610**). After an event occurs (step **615**), as described further below, the client

application stores an event record (step **620**). At a time appropriate for the event record, the client application **110** transmits the event record to an interactive data server such as the OSP server **130** (step **630**). This continues until the session is terminated (step **635**).

[**0082**] The connection events include failed connection attempts, such as when the client application **110** attempted a dial-up session and encountered no dial tone, a busy signal, or some other error from the physical network. The connection event records allow the online service provider to better understand where the users are experiencing difficulties, and to therefore remedy problems and enhance operations without necessitating user feedback. This is important because the connection event records may provide more timely and accurate information about a user's experiences, and further allows the online service provider to diagnose problems based upon common characteristics of users who have had problems.

[**0083**] The advertising events relate to the display of advertisements by the client application **110**. Each time the client application **110** displays an advertisement (commonly referred to as an "impression"), the client application **110** preferably records an identifier of the advertisement. These records are used by the client application **110** to permit the user to cycle back through previously displayed advertisements, and then to cycle forward through the advertisements. Cycle-back and cycle-forward is made available to the user, for example, through the cycle-back icon **205** and the cycle-forward icon **215**. The client application **110** preferably also records errors encountered in attempting to fetch and display advertisements.

[**0084**] In accordance with the invention, special attention is given to the user's selection of advertisements in the ad pane **210**. To track the effectiveness of advertisements displayed in the ad pane **210**, the client application **110** preferably tracks not only click-throughs, but also how long the client application displays an advertisement before the user clicks-through. This information, as well as records of what Web sites the user has browsed, are preferably used by the online service provider to enhance advertisement targeting criteria, to enable dynamic advertisement targeting, and to track the performance of advertisements displayed in the ad pane **210**.

[**0085**] The operational events relate to the user's use of certain features of the client application **110**. The operational events thus include attribute settings such as whether the user has hidden the title bar **230** and/or the button bar **280**, and where the user has placed the client window **200** on the display **101**. The client application **110** further recognizes as events each icon **205**, **215**, **240**, **250**, **260**, **265**, **270**, **275**, **280** which the user has selected (clicked-on). These operational event records allow the online service provider to better understand how the users are using the online service and to therefore enhance the quality of the client application **110** and the user's online experience.

[**0086**] In general, the client application **110** transmits most types of event records in a batch form. The online service provider preferably specifies the number of events to record before transmitting the event records, and this number preferably may be adjusted during a session. However, some event records should be transmitted without delay—most notably click-throughs. Click-throughs are not batched because the fact of these events is preferably used by the OSP server for refinement of dynamic advertisement targeting.

[**0087**] Closing Comments

[**0088**] The foregoing is merely illustrative and not limiting, having been presented by way of example only. Although exemplary embodiments of the invention have been shown and described, it will be apparent to those having ordinary skill in the art that a number of changes, modifications, or alterations to the invention as described herein may be made, none of which depart from the spirit of the present invention. All such changes, modifications and alterations should therefore be seen as within the scope of the invention.

It is claimed:

1. A method of displaying advertisements to a user of an online service using a client application on a local device, the local device including an input device and an output device, the local device having a continuous communications link to a network, the user using the local device for accessing the online service and for interacting with the online service, the method comprising:

the client application becoming active and establishing a session with the online service over the continuous communications link;

the client application receiving a first play list;

the client application monitoring the user's network activity thereby detecting whether the user is accessing the network;

the client application displaying a client window on the output device of the local device, wherein the client window displays continuously so long as the user is accessing the network;

the client application causing advertisements to be displayed in an ad pane of the client window in accordance with the first play list, the first play list comprising plural ad objects, each ad object comprising a resource locator for a given advertisement and a resource locator for a click-through associated with the given advertisement, the first play list further specifying an order in which the advertisements identified in the first play list are to be displayed.

2. The method of displaying advertisements to a user of an online service using a client application on a local device of claim 1, wherein at least one of the ad objects includes a length of time to display the given advertisement.

3. The method of displaying advertisements to a user of an online service using a client application on a local device of claim 1, the method further comprising:

the client application receiving the first play list from an ad server after establishment of the session with the online service.

4. The method of displaying advertisements to a user of an online service using a client application on a local device of claim 1, the method further comprising:

the client application receiving the first play list from the online service after establishment of the session with the online service.

5. The method of displaying advertisements to a user of an online service using a client application on a local device of claim 1, the method further comprising:

the client application detecting that the user has not interacted with the network for a predefined period of time, and

the client application ceasing the display of the client window.

6. The method of displaying advertisements to a user of an online service using a client application on a local device of claim 1, wherein the client application causes the client window to be displayed on top of any other window displayed on the output device.

7. The method of displaying advertisements to a user of an online service using a client application on a local device of claim 6, the method further comprising:

the client application detecting that the user has not interacted with the network for a predefined period of time, and

the client application ceasing the display of the client window on top of any other window displayed on the output device.

8. The method of displaying advertisements to a user of an online service using a client application on a local device of claim 1 wherein the ad object further includes display attributes for the given advertisement.

9. The method of displaying advertisements to a user of an online service using a client application on a local device of claim 8 wherein the display attributes include at least one from the group comprising: fade, wash, sweep, fly, blinds, box, checkerboard, crawl, dissolve, peak, spiral, split, stretch, strips, swivel, wipe, and zoom.

10. The method of displaying advertisements to a user of an online service using a client application on a local device of claim 1 further comprising:

the client application recording an identifier of a given advertisement displayed by the client application, and

the client application transmitting the identifier to an interactive data server on the online service.

11. A method of displaying advertisements to a user of an online service using a client application on a local device, the local device including an input device and an output device, the local device having a constant-connection to the Internet, the user using the local device for accessing the online service and for interacting with the online service, the method comprising:

the client application becoming active and establishing a session with the online service;

the client application receiving a first play list;

the client application monitoring the user's activity with the online service and thereby detecting whether the user is interacting with the online service;

the client application displaying a client window on the output device of the local device, wherein the client window displays continuously while the user is interacting with the online service;

the client application causing advertisements to be displayed in an ad pane of the client window in accordance with the first play list, the first play list comprising plural ad objects, each ad object comprising a resource locator for a given advertisement, a resource locator for a click-through associated with the given advertisement, and display attributes for the given advertisement, the first play list further specifying an order in which the advertisements identified in the first play list are to be displayed.

12. The method of displaying advertisements to a user of an online service using a client application on a local device of claim 11, wherein at least one of the ad objects includes a length of time to display the given advertisement.

13. The method of displaying advertisements to a user of an online service using a client application on a local device of claim 11, the method further comprising:

the client application receiving the first play list from an ad server after establishment of the session with the online service.

14. The method of displaying advertisements to a user of an online service using a client application on a local device of claim 11, the method further comprising:

the client application receiving the first play list from the online service after establishment of the session with the online service.

15. The method of displaying advertisements to a user of an online service using a client application on a local device of claim 11, the method further comprising:

the client application detecting that the user has not interacted with the online service for a predefined period of time, and

the client application ceasing the display of advertisements in the ad pane.

16. The method of displaying advertisements to a user of an online service using a client application on a local device of claim 11, wherein the client application causes the client window to be displayed on top of any other window displayed on the output device.

17. The method of displaying advertisements to a user of an online service using a client application on a local device of claim 16, the method further comprising:

the client application detecting that the user has not interacted with the online service for a predefined period of time, and

the client application ceasing the display of the client window on top of any other window displayed on the output device.

18. The method of displaying advertisements to a user of an online service using a client application on a local device of claim 11 wherein the display attributes are at least one from the group including: fade, wash, sweep, fly, blinds, box, checkerboard, crawl, dissolve, peak, spiral, split, stretch, strips, swivel, wipe, and zoom.

19. The method of displaying advertisements to a user of an online service using a client application on a local device of claim 11 further comprising:

the client application recording an identifier of a given advertisement displayed by the client application, and

the client application transmitting the identifier to an interactive data server on the online service.

* * * * *