E. W. HOBBS.

ARTIFICIAL ARM AND HAND AND ACTUATING MEANS THEREFOR.

APPLICATION FILED MAR. 19, 1917.

1,253,823.

Patented Jan. 15, 1918.

3 SHEETS—SHEET 1.

Fig. 1.

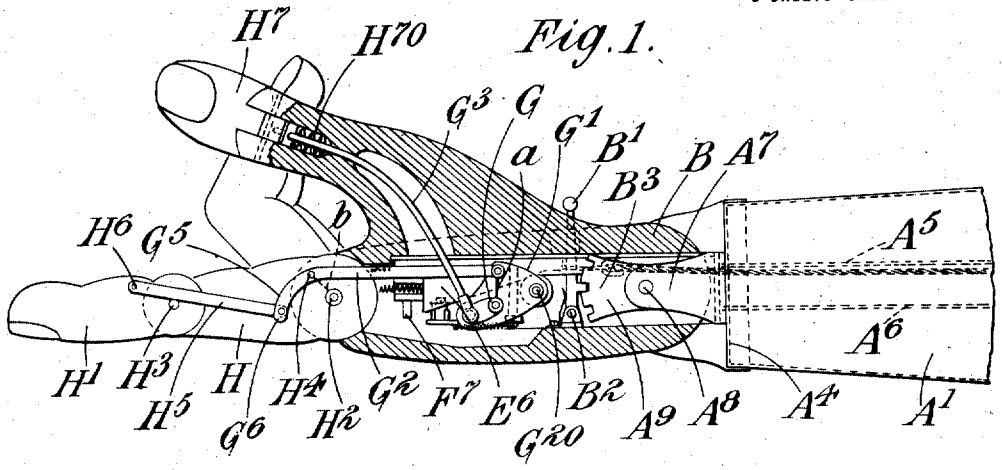

Fig. 7.

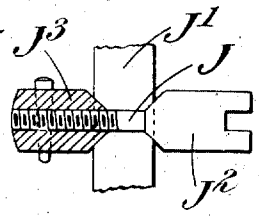

Fig. 8.

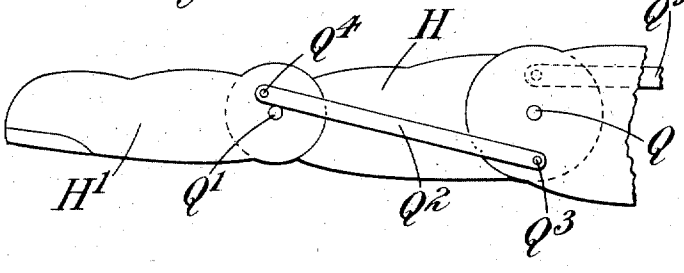

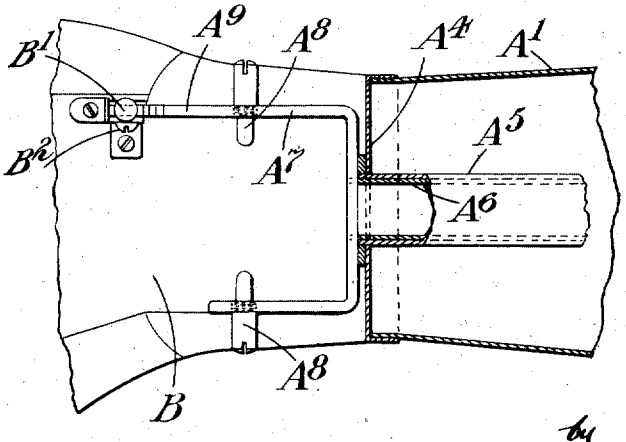

Fig. 4.

Inventor.
E. W. Hobbs.
by Wilkinson, Gjusta & Mackaye.
Attorneys.

E. W. HOBBS.

ARTIFICIAL ARM AND HAND AND ACTUATING MEANS THEREFOR.

APPLICATION FILED MAR. 19, 1917.

1,253,823.

Patented Jan. 15, 1918.

3 SHEETS—SHEET 2.

Fig. 2.

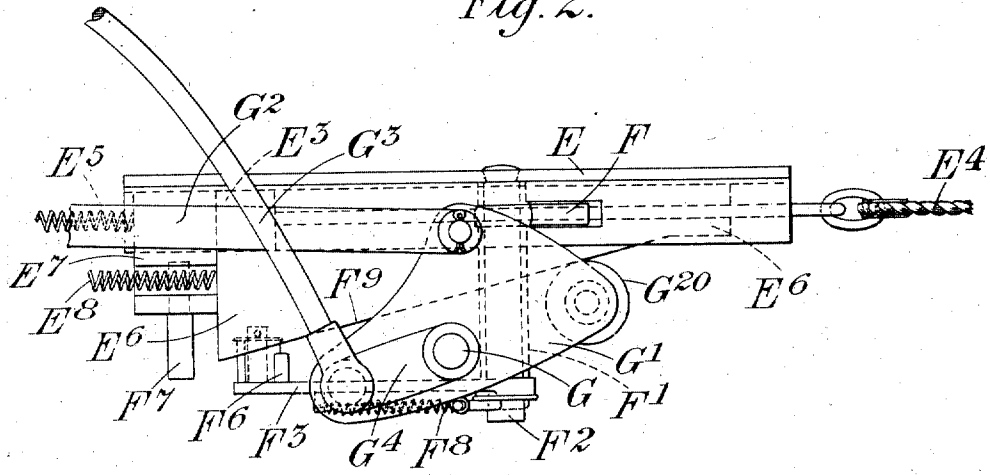

Fig. 3.

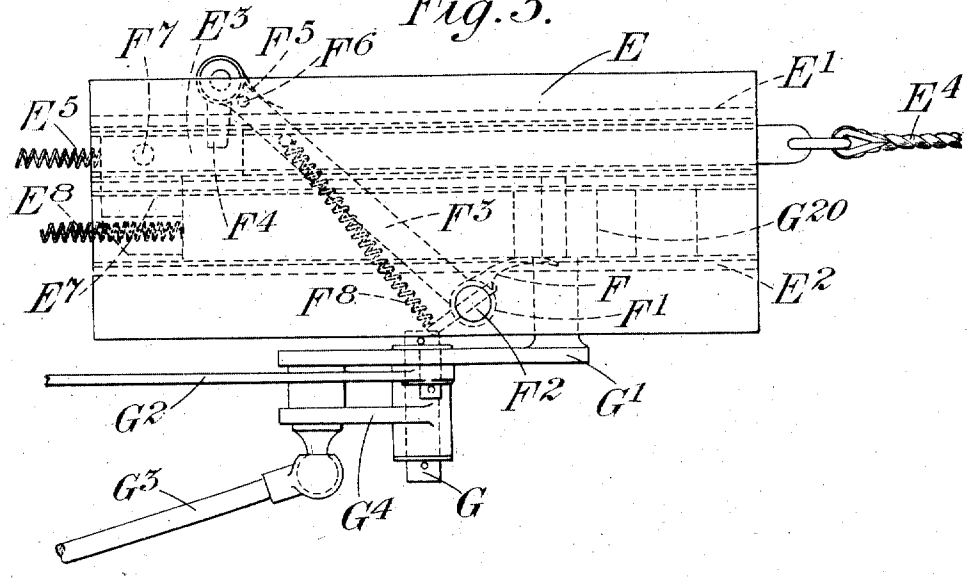

Inventor:
E. W. Hobbs.
by Wilkinson, Gjesta & Mackay
Attorneys.

E. W. HOBBS.

ARTIFICIAL ARM AND HAND AND ACTUATING MEANS THEREFOR.

APPLICATION FILED MAR. 19, 1917.

1,253,823.

Patented Jan. 15, 1918.

3 SHEETS—SHEET 3.

Fig. 5.

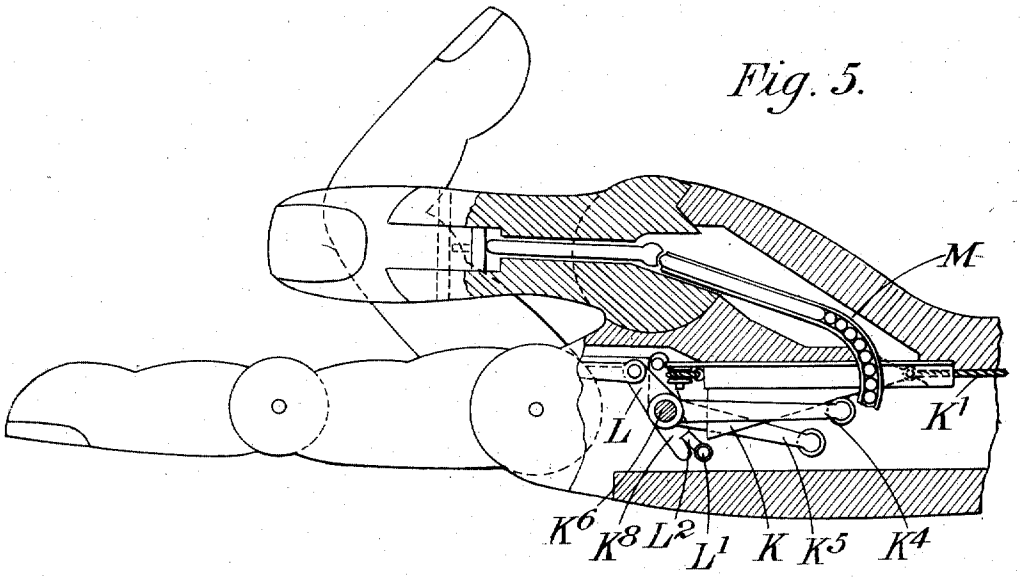

Fig. 6.

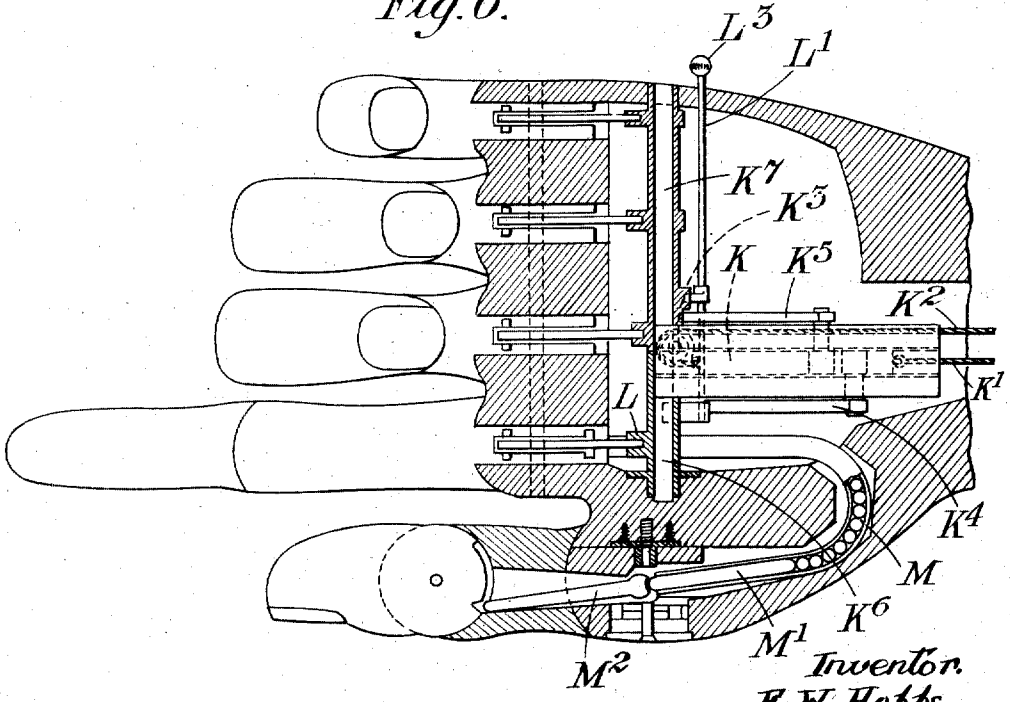

Inventor.
E. W. Hobbs.
by Wilkinson, Guide & Mackaye
Attorneys.

UNITED STATES PATENT OFFICE.

EDWARD WALTER HOBBS, OF SURREY, ENGLAND.

ARTIFICIAL ARM AND HAND AND ACTUATING MEANS THEREFOR.

1,253,823. Specification of Letters Patent. Patented Jan. 15, 1918.

Application filed March 19, 1917. Serial No. 155,878.

To all whom it may concern:

Be it known that I, EDWARD WALTER HOBBS, a subject of the King of England, residing in Surrey, England, have invented certain new and useful Improvements in Artificial Arms and Hands and Actuating Means Therefor, of which the following is a specification.

This invention is for improvements in or relating to artificial arms and hands, and actuating means therefor and has for its object to provide improved mechanism whereby the artificial limb may, under the volition of the wearer, effect movements performed by the natural limb for which it is adapted to act as a substitute.

The invention is applied to artificial arms of the type in which a harness is fitted about the chest and shoulders of the wearer, and cords or the like operatively connect the artificial limb with the harness so that the limb may be actuated by muscular action of the harnessed part of the wearer's body.

In the accompanying drawings—

Figure 1 is a general view of an artificial arm and hand adapted to be used when the arm has been amputated above the elbow;

Figs. 2 and 3 are a side elevation and plan respectively of the mechanism for effecting the movement of the fingers;

Fig. 4 is a detail of the wrist-construction;

Fig. 5 is a side elevation, partly in section, of a modified construction of finger-operating mechanism;

Fig. 6 is a plan of the same;

Fig. 7 is a detail of the finger-operating mechanism; and

Fig. 8 shows an alternative link-mechanism for the fingers.

Like reference characters denote like parts throughout the drawings.

The artificial hand now about to be described is attached to the forearm by a suitable wrist-joint which is adapted to give two movements to the hand, one a rotation about the longitudinal axis of the forearm, and the other a bending movement about an axis transverse to the forearm. Fig. 4 shows the arrangement of the wrist-joint for the bending movement, this view being a section at right-angles to that illustrated in Fig. 1 and on a larger scale. The end of the forearm A^1 is closed by a plate A^4 in which there is centrally mounted a steel or other suitably strong tube A^5. This tube, as will be seen from Fig. 1, extends through the greater part of the length of the forearm A^1 and constitutes a strengthening member therefor. Within the tube A^5 there is rotatably mounted a second tube A^6 and this tube carries, on its end, a U-shaped bracket A^7. Pivot-pins A^8 project inward from the arms of the bracket A^7 and engage a portion B of the hand, which is bounded rearwardly by a semi-cylindrical surface as shown in Fig. 1. The pivots engage with the center of the circular part. The hand can therefore turn about the pivots A^8 as a center, this turning constituting the bending of the hand relatively to the forearm. The control of this movement is effected by providing a notched plate A^9 constituted by an extension of the bracket A^7 (or secured on the bracket) and a detent B^1, pivoted at B^2 on the body of the hand, and provided with a tongue B^3 to engage the notches in the plate A^9. A spring is used to hold the lever B^1 in its engaging position, and the end of the lever projects into the palm of the hand near the wrist so that it may be actuated by the other hand of the wearer. Thus, when the user wants to flex the hand at the wrist, the lever B^1 is moved to disengage the lug B^3 and the hand moved to the desired position when the lug B^3 is allowed to engage with another notch. As shown in Fig. 1, three notches are provided corresponding to three positions of the hand, as this is found to be sufficient in practice to satisfy all ordinary requirements.

The mechanism for obtaining the other wrist-movement, that is to say a rotation of the hand about the longitudinal axis of the forearm, does not form any part of this invention and it need only be pointed out that such mechanism is desirable to render the artificial hand as useful as possible.

The mechanism for operating the fingers and thumb of a mechanical hand is illustrated in Figs. 2 and 3, and is also shown in Figs. 1, 5 and 6 in position on a hand. Referring to Figs. 2 and 3, the mechanism consists of a base-plate E provided with two undercut recesses or grooves E^1 E^2. In one of these grooves there is mounted a slider E^3 and it is provided at one end with an operating cord E^4 which extends up the forearm and is connected to the usual body-harness whereby the wearer can operate it.

The slider E^3 is provided with a spring E^8 which is operative to return it to its original position after it has been moved in its guide E^1 by the cord E^4.

The second groove E^2 in the base-plate is parallel with the first one and serves as a guide for a wedge E^6 which can reciprocate in it. The wedge-member is disposed lengthwise in the groove so that one end of it is lower than the other. The slider E^3 carries a projection E^7 which extends across the groove E^2 so that it can engage the wedge-member E^6 and move it when the slider is moved by pulling on the cord E^4. A spring E^8, or other resilient control similar to that on the slider, is provided for the wedge, and is arranged to move the wedge in a direction in which its thicker end is in front. That is to say, when the wedge E^6 is moved by pulling on the cord E^4, the wedging face is in front, but when it is moved backward by the spring E^8, the wedging face is behind.

A brake or detent is provided to hold the wedge in any position to which it has been moved. A brake-shoe F is mounted on a sleeve F^1 which is free to turn on a vertical spindle F^2 fixed on the base E, the disposition and arrangement of the shoe being such that it acts frictionally like the pawl of a ratchet, and does not restrict appreciably any movement of the wedge toward the right in Figs. 2 and 3; it does, however, prevent movement toward the left. The sleeve F^1 also carries an arm F^3 which extends across the base-board and carries a pawl F^4 at its free end. This pawl is controlled by a spring F^5 to project into the path of a pin F^7 on the slider E^3 and a stop F^6 on the arm F^3 limits the movement of the pawl F^4 in one direction. The arrangement is such that when the slider E^3 is moved to the right in Fig. 3, the pin F^7 engages the pawl F^4 which is in contact with the stop F^6. As the pin F^7 is moved forward, it causes the arm F^3 to be rocked about the pin F^2 as a center in a clockwise direction in Fig. 3. The engagement of the pin F^7 with the pawl F^4 is made very slight, so that the movement of the arm F^3 soon carries the pawl clear of the pin and allows the slider to continue its further movement toward the right. This slight rotational movement of the arm F^3 is imparted to the brake-shoe F and lifts it away from the wedge. The latter is thereby free to move toward the left under the action of its controlling spring, or if the movement of the slider is continued, it will move the wedge toward the right. The continued movement of the slider carries it past the pawl on the arm F^3 and the brake is therefore applied again, but, as explained above, it is practically inoperative as regards movement of the wedge toward the right. The parts may be so disposed that this brake-releasing movement of the slider takes place before the slider engages the wedge to move it. A spring F^8 holds the arm F^3 normally in the position in which the brake F is applied to the wedge. A spindle G is mounted near the base-board with its axis transverse to the line of movement of the wedge and it carries a three-armed lever or equivalent device which, as shown, consists of a triangular plate G^1. At one end this plate carries a roller G^{20} which lies on the inclined surface F^9 of the wedge E^6, so that movement of the wedge in its groove causes the plate G^1 to be rocked about the spindle G as a center. Another corner of the plate is connected by a link G^2 to the finger-operating mechanism, and the third corner of the plate is connected by a link G^3 to the thumb for operating the same. In the preferred construction, the plate G^1 is stiffened and reinforced by an additional link G^4 which receives the pivotal connection for the thumb-link G^3.

Referring now to Fig. 1, the connection of the mechanism illustrated in Figs. 2 and 3 to the fingers, is illustrated.

The finger consists of two phalanges H H^1. The first phalanx H is pivoted at H^2 on to the palm of the hand and the second phalanx is pivoted at H^3 on to the first phalanx. The link G^2, referred to above, is connected to the first phalanx by a pivotal connection H^4 and the link itself has an extension G^5 which lies at an obtuse angle with the part G^2, thereby forming a bell-crank lever, and has a pivotal connection, at its end G^6, with a link H^5. The other end of this link is pivoted at H^6 on the second phalanx. The pivot H^4 is so positioned relatively to the pivot H^2 that a pull on the rod G^2 causes the first phalanx to swing upward in the position for closing the fingers. The pivot-point G^6 is arranged to lie on the opposite side of the line joining the points H^3 H^2, from the pivot-point H^6. When the phalanx H is swung up the part G^5 of the link has a turning movement about the pivot H^4 relatively to the phalanx H, or, in other words, to the line of centers H^2 H^3. This relative turning movement gives a pull on the link H^5 so that the outer phalanx H^1 is caused to turn on its pivot H^3 relatively to the inner phalanx H. This relative turning movement is superposed on the movement of the first phalanx, so that the second phalanx is folded down until the tip of the finger approaches the palm of the hand.

It will be seen that the link G^2 constitutes a coupling-rod between two virtual cranks indicated at *a b* on Fig. 1. These cranks are preferably of unequal length, *a* being the shorter, and are not parallel, the arrangement being such that a small angular movement of the crank *a* causes a larger angular

movement of the crank *b* during the initial part of the movement. Instead of using the crank *a*, the parts may be so arranged (for example, connected to a cord from the harness) that a direct pull is applied to the link G^2, but the operation of the linkage is the same. Further, it will be seen that the phalanx H constitutes one member of a link-mechanism H G^5 H^5 and the virtual crank between the pivots H^3 H^6, such linkage effecting the movement of the outer phalanx H^1.

Similar mechanism may be provided for each of the other fingers, in which case each would be provided with a link corresponding to the link G^2, and this link would be moved by a radial arm mounted on a shaft G extending transversely of the palm of the hand.

The thumb is provided with one movable phalanx H^7 and this is directly connected with the link G^3, which, in the arrangement shown, is designed to exert a thrust on the tail on the phalanx so as to cause it to be bent against the action of a spring H^{70} in the same manner as a natural thumb.

The link-mechanism for operating the fingers constitutes a kind of toggle-mechanism so that considerable force can be exerted by the fingers to grip any article that is desired. The opening of the fingers under this pressure is prevented by so arranging the wedge that the mechanism is not reversible. The proportions of the parts of the plate G^1 are so arranged that the pressure of the roller G^{20} on the wedge-surface F^9 is always approximately normal to the base-plate E and the angle of the wedge is sufficiently small to insure that the horizontal component of this thrust, tending to move the wedge along the base-plate, is insufficient to overcome the friction. The brake-shoe F, described above, acts as a further safeguard to prevent any such movement.

The operation of this mechanism is as follows:—

Assuming that the fingers are straight in the position indicated in Fig. 1, and that it is desired to close them, a pull is exerted on the cord E^4 by means of the harness. This pull moves the slider E^3, which releases the brake F and then moves the wedge E^6. The plate G^1 is rocked about its pivot G by the engagement of the roller G^{20} with the wedge-face F^9, and a pull is imparted to the link G^6 and a thrust to the link G^3. The link G^2 causes the finger, or fingers, to fold in toward the palm of the hand the link G^3 causes the thumb to bend over to meet the fingers. When the pull on the cord E^4 is released, the wedge E^6 remains stationary, being held by the brake-shoe F. The slider E^3 therefore returns to its original position under the influence of the spring E^5. The pin F^7 rides past the pawl F^4 which yields, under the control of the spring F^5, and returns to its original position.

If, now, it is desired to open the fingers, a slight pull on the cord E^4 moves the slider forward until the pin F^7 engages the pawl F^4 and rocks the arm F^8 only sufficiently to release the brake F from the wedge. The wedge is thereupon returned to its original position under the influence of the spring E^8 and in so doing, the link-mechanism is left free to be moved backward to its original position by a spring H^{70} engaging the end phalanx of the thumb. The spring is so arranged that it is compressed when the thumb (and fingers) are flexed, and it therefore operates to return them when released.

The pivot-pins by which the links are secured to the fingers or other parts of the hand, are illustrated in Fig. 7. Generally speaking, the phalanges of the fingers are made of wood or similar light material and the links are of metal. It is desirable to keep the pivot-pins small, in order that the friction of the links on them is reduced to a minimum, but small pivot-pins very rapidly become loose in the wooden part of the finger in which they are mounted. A subsidiary feature of this invention consists in the construction of pivot-pin shown in Fig. 7. The pivot-pin is formed with a reduced part J upon which the link J^1 bears, and a head J^2, of larger diameter than the part J, is provided. A coned surface connects the two parts. A nut J^3, similar in dimensions to the head J^2, is screwed on to the other end of the pin J and it may be pinned thereto if desired. The two enlargements J^2 J^3 constitute a support for the pivot-pin in the wooden part of the hand or finger and they are of suitable large dimensions. The middle part J, which is of small diameter, constitutes a suitably small bearing for the link J^1. The coned surfaces on the two enlargements provide means for taking up slack or wear in the bearing by screwing the nut J^3 somewhat farther on to the pin J.

An alternative construction of link-mechanism for operating the fingers is illustrated in Fig. 8. The first phalanx H is pivoted at Q to the palm of the hand and the second or outer phalanx H^1 is pivoted at Q^1 to the phalanx H. A drag link Q^2 is pivotally connected to the palm of the hand at Q^3 and to the outer phalanx H^1 at Q^4, the points Q^3 and Q^4 lying on opposite sides of the line joining the pivots Q Q^1. It will be seen that in this construction the phalanx H constitutes a link pivoted at Q and Q^1 and that the link Q^2 lies across it. When the phalanx H is bent by pulling on the link Q^5, the phalanx H^1 is carried with it, but owing to the connection by the link Q^2 an additional angular movement is imparted

to the phalanx H^1, thus simulating the natural bending movement of the fingers.

Figs. 5 and 6 show another form of hand embodying various modifications in details of construction. Instead of using only a single cord to operate the wedge in one direction, and a spring to give the return movement, two cords may be used, each attached to the harness and arranged to move it in opposite directions. The wedge is shown at K and it has one cord K^1 attached directly to it, and another cord K^2 which passes around a sheave K^3 for moving it in the reverse direction.

Various arrangements of finger-operating mechanism can be used. Thus, for example, all the fingers may be permanently coupled up so that they are all moved together. In another instance it may be only necessary to move the fore-finger and thumb, the other three fingers being permanently folded in toward the palm of the hand. Yet again, these three fingers, or some of them, may be so mounted as to be adjustable to any desired position by moving them directly, that is to say, they are not operated by the harness and can only be set into different positions. Figs. 5 and 6 show a construction in which all the fingers and the thumb are arranged to be operated from the harness, but the second, third and fourth fingers can be disengaged from it and can remain permanently closed.

The wedge, which may be of either of the types hereinbefore described, coöperates with two arms K^4 and K^5, each of which has a roller mounted on it. The arm K^4 is mounted on a shaft K^6 which is supported in suitable bearings near the base of the fore-finger. The arm K^5 is mounted on a shaft K^7 which extends transversely of the palm of the hand near the roots of the second, third and fourth fingers. The link-mechanism for each of the fingers is connected to separate radial arms L secured on the shafts K^6 and K^7 respectively. The arrangement is such that when the wedge is traversed to and fro, the arms K^4 and K^5 are rocked and transmit their motion to the fingers as hereinbefore described.

In order to disengage the second, third and fourth fingers, means are provided for lifting the arm K^5 away from engagement with the wedge. This is conveniently effected by means of a spindle L^1 mounted to turn in suitable bearings and having a finger L^2 which can be engaged with an arm K^8 projecting from the shaft K^7, as shown in Fig. 5. A milled head L^3 is provided on the end of the spindle L^1 at the side of the palm of the hand, to provide for rotating the spindle. As shown in Fig. 5, the spindle L^1 has been rotated through a part of its range of movement and the shaft K^7, by such rotation, has caused the three fingers to fold in toward the palm of the hand. The finger L^2 and arm K^8 may be so arranged that the arm L^2 gets on to a dead center at the end of its rotational movement so that the fingers cannot be opened by pressure applied to them. It will be appreciated that the arm K^5 is moved clear of the wedge K so that the movement of the latter, for operating the fore-finger and thumb, does not affect the arm K^5.

This system of disengaging the operating mechanism for certain members may be applied in various forms according to the special requirements of any particular case.

Figs. 5 and 6 also illustrate an alternative arrangement of operative connection shown as applied to the thumb. The first phalanx of the thumb is pivoted, as shown in Fig. 6, on an axis which lies in a plane parallel with the palm of the hand and in a direction transverse to the longitudinal axis of the hand, or in other words transverse to the fingers. The second or outer phalanx is pivoted near the end of the first on an axis at right-angles to the first pivotal axis. The first phalanx can be swung forward in front of the plane of the palm and the second phalanx can then be tilted over to lie in front of the fingers in position for grasping articles between the forefinger and thumb.

An inextensible tube or conduit M is filled with steel balls which are used to transmit a thrust to the outer phalanx to operate it. Thus, the shaft K^6 may be provided with a radial arm coupled to, or engaging, a push-rod which enters the conduit M and engages the balls to transmit the thrust to them. At the other end of this conduit a push-rod M^1 engages a second rod M^2 by a ball-joint to transmit the thrust to the movable phalanx of the thumb. This ball-joint is inserted in the operative connection when the first phalanx of the thumb is pivoted on the palm of the hand and the ball-joint lies on the pivotal axis so that the thrust will be transmitted to the outer phalanx of the thumb in whatever position the inner phalanx may be.

It will be appreciated that many modifications may be made in the detailed construction of the various parts, without going outside the scope of the invention as set forth in the appended claims. Thus, the arrangements shown in Figs. 5 and 6 for disconnecting certain fingers, may be applied to any, or all, of the fingers and also to the thumb if so desired and various modifications will be required according to the particular circumstances of each case. The operating mechanism for the various parts, for example the wedge and the plate G in the finger mechanism, are proportioned according to the particular requirements. Thus, the slope of the wedge is determined partly by the working stroke which it can be given,

and partly by the radius of action of the roller G^{20} on it, since all that is required is to impart a certain movement to the links G^2 G^3. This movement, in turn, governs the situation of the pivotal connections to the phalanges. Similarly, the linkage for the different fingers may be varied so that when they are operated simultaneously they open or close in varying degrees so as to simulate more exactly the natural action of the hand.

The proportioning of the finger-linkage G^5 H^5 and the positioning of the pivotal connections can be varied according to the force which it is required to exert by the fingers in closing.

Finally, it may be pointed out that in order to obtain a good frictional hold on objects touched, the tips of the fingers may be made of rubber and spring-steel finger-nails may be provided. In this way, actions such as turning over the pages of a book, or opening pocket-knives, may be readily effected. The steel nails, of course, also assist in stiffening the rubber-tips if such stiffening be necessary.

What I claim as my invention and desire to secure by Letters Patent is:—

1. In an artificial hand, the combination with a movable part thereof, of a reciprocatable wedge, a rocking member engaging an inclined face of said wedge to be rocked by the reciprocation thereof, and an operative connection between said rocking member and said movable part.

2. In an artificial hand the combination with a movable member or members of the limb, of a reciprocatable wedge to work them, a reciprocatable slider movable alongside the wedge and actuated by the patient, returning-springs for the wedge and slider, a brake or detent acting on the wedge, a brake- or detent-releasing lever, a brake-applying spring and projections from the slider that in its forward stroke temporarily release the brake or detent and actuate the wedge, the construction of the brake-releasing lever and projections being such that the former is only operated in the forward stroke of the latter.

3. In an artificial hand, the combination with a movable finger thereof, of a rocking shaft, an arm on said shaft, a link connecting said arm to said finger, a reciprocatable wedge, a second arm on said shaft engaging the wedging face of said wedge, and independently operated means engaging said second arm to disengage it from said wedging face when required.

4. In an artificial hand, the combination of a reciprocatable wedge mounted in the palm of the hand, a rocking lever whereof one arm engages an inclined face of said wedge, a movable finger comprising two phalanges whereof the first is pivotally connected near one end to the palm of the hand and the second is pivotally mounted near the free end of the first, a link connected to a second arm of said rocking lever and to said first phalanx at a point eccentric from its pivotal axis, a cranked extension on said link shaped to cross the line connecting the two pivotal axes of the two phalanges when these phalanges are in line with one another, a second link connecting the end of said cranked portion to a point on the second phalanx, which point is eccentric from the pivotal axis of said second phalanx.

5. In an artificial hand the combination with a plurality of movable fingers of a reciprocatable wedge, a rocking member engaging an inclined face of said wedge and rocked by the reciprocation thereof, and an operative connection of different velocity ratio between said rocking member and each of said fingers.

6. In an artificial hand the combination of two groups of movable fingers, a reciprocatable wedge, two rocking members engaging said wedge, an operative connection between each group of fingers and one of the rocking members, and means for selectively disengaging said rocking members from said wedge.

7. In an artificial hand, the combination with a phalanx pivoted on the palm and a second phalanx pivoted on the first, of an operating link pivoted at one end to the palm of the hand at a point (Q^3) lying on a line approximately at right-angles to the line joining the pivot points of the phalanges, and at the other end to the second phalanx at a point (Q^4) eccentric from the pivot point of that phalanx.

8. In an artificial hand, means for moving one member relatively to another comprising a crank engaging a push-rod which in turn engages a series of balls in an inextensible conduit and a second push-rod operatively connected to the member.

In testimony whereof I have signed my name to this specification.

EDWARD WALTER HOBBS.

Copies of this patent may be obtained for five cents each, by addressing the "Commissioner of Patents, Washington, D. C."