Sept. 5, 1950 J. J. FINE 2,521,509

STRAP CUTTING MEANS FOR VENETIAN BLINDS

Filed Nov. 10, 1947

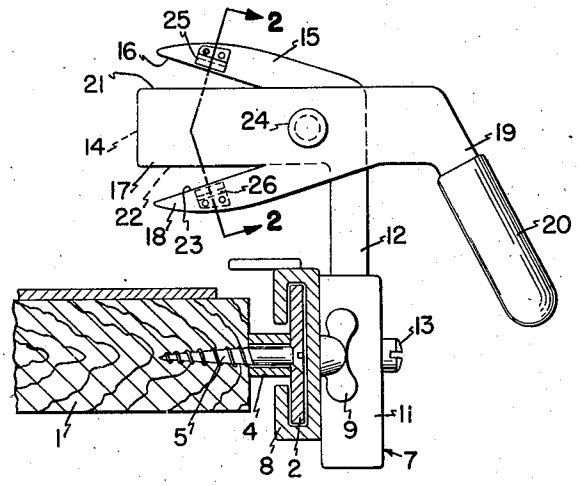

FIG. 1

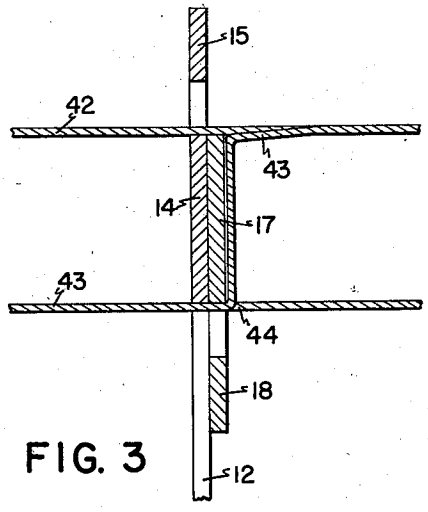

FIG. 3

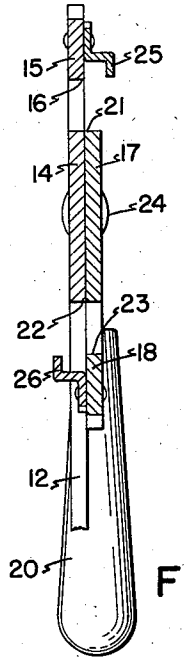

FIG. 2

INVENTOR.

JOSEPH J. FINE

BY Ezekiel Wolf

HIS ATTORNEY

Patented Sept. 5, 1950 2,521,509

UNITED STATES PATENT OFFICE

2,521,509

STRAP CUTTING MEANS FOR VENETIAN BLINDS

Joseph J. Fine, Brookline, Mass.

Application November 10, 1947, Serial No. 784,989

4 Claims. (Cl. 164—41)

1

The present invention relates to a device for cutting Venetian blind tapes and is an improvement over my co-pending application Serial No. 748,791, filed May 17, 1947. The improvement in the present invention chiefly concerns the cutting mechanism, but in association with the measuring means whereby the correct tape length for a desired group of blinds may be measured. In the manufacture of Venetian blinds, it is common to make the blinds of a certain pre-determined length and this fixes the length of the tape which is used in the blinds. Two or three tapes, or even more, are used for a single blind, the tape, as is well known, running lengthwise of the completed blind. If the tapes are cut too long, material is, of course, wasted and they must also be recut, while if they are cut short they must be discarded for the blind for which they were originally intended. The cutting, therefore, is an important feature in the manufacture of the blind and accurate and rapid cutting aids materially in manufacture.

The present invention will be more fully described in the specification below, illustrating an embodiment thereof, when taken in connection with the drawings, in which:

Fig. 1 shows the invention partly in cross section;

Fig. 2 shows a section taken substantially on the line 2—2 of Fig. 1; and

Fig. 3 shows a detail of the attachment of the tape to the cutting means.

In the present invention, as in my previous application, the same type of bench 1 may be used with other similar elements such as the rail 2, the spacer 4, the attaching screw 5 and the carriage 7, with the C-shaped supporting section 8 which encloses and slips along the rail 2, the clamping wing nut 9 and the set screw 13 for locking the post 12 in the cylindrical collar 11. These elements are more fully described in my co-pending application.

In the present invention, the post 12 is provided with an inwardly extending plate 14 and an angularly forwardly and upwardly extending finger 15, the upwardly extending finger 15 having an inner edge 16 which serves as one of the shearing edges in the mechanism. Directly in front of the plate 14 is pivoted a second plate 17 with a downwardly and inwardly extending finger 18. Both 17 and 18 extend backwards or to the right as viewed in Fig. 1, and have a downwardly projecting end 19 on which a handle 20 is attached. The upper edge 21 of the plate 17 is formed as the second shearing edge, cooperating with the edge 16 to cut the tape member at the top while

2

the lower finger 18, at its edge 23, cooperates with the lower edge 22 of the plate 14 to shear the lower end of the tape. The plates 14 and 17 are pivoted together at 24. Each finger member, 15 and 18, may be provided with supporting guides 25 and 26, comprising angle brackets which extend outward to the external surfaces of the plates 17 and 14 respectively.

As the handle 20 is brought downward as viewed in Fig. 1, the plate 17 and the arm 18 are rotated in clockwise rotation as seen in Fig. 1, while the plate 14 and the arm 15 remain in a stationary position. The cutting edge 23 on the arm 18, and 22 on the arm 14, shear across one another to cut the lower tape 43 just to the left of the corner 44, where the cross piece emerges from the tape 43, while the cutting edge 21 of the arm 17, and 16 of the arm 15, shear the upper tape 42. The inner surfaces of the guide angle members 25 and 26 move in a sliding contact across the outer surfaces of plates 17 and 14 respectively as the shearing blades come together.

In the present construction, the blades are made comparatively thin and as a result the shearing lengths of the tapes at either side are practically for all purposes the same. The simplicity of the shearing arrangement, in which the handle action produces the motion of the cutting blades directly without any intricate mechanism such as cams, gears, or the like, makes it possible to provide an accurate cutting mechanism in a comparatively simple manner.

Having now described my invention, I claim:

1. In a tape cutter for cutting a pair of separate strips for Venetian blinds, a shearing means therefor comprising a pair of shearing plates pivoted in face to face relation, each having two cutting edges adapted to engage in pairs, said pairs of edges being positioned at the sides of the plates recessed therein, and bracket members extending from the sides of said plates with an inner surface positioned to engage the outer surface of its opposed plates as the plates are turned about their pivots.

2. A tape cutter for cutting a pair of separate strips for Venetian blinds, comprising a pair of shearing members, one member having an operating handle and the other member a supporting arm for supporting the cutter, means pivoting said members together for shearing action, each of said members having a cutting plate with parallel sides and an adjacent cutting blade in the same plane as the plate, the cutting blades being on opposite sides of the cutting plates with the plates in opposing relation to each other.

3. A tape cutter for cutting a pair of separate

strips for Venetian blinds, comprising a pair of shearing members, one member having an operating handle and the other member a supporting arm for supporting the cutter in a fixed position, means pivoting said members together for shearing action, each of said members having a cutting plate with parallel sides and adjacent cutting blade in the same plane as the plate, said cutting plates being a width corresponding to the spacing between said strips, the cutting blades being on opposite sides of the cutting plates with the plates in opposing relation to each other.

4. A tape cutter for cutting a pair of separate strips for Venetian blinds, comprising a pair of shearing members, one member having an operating handle and the other member a supporting arm for supporting the cutter, each of said members having a cutting plate with parallel sides and an adjacent cutting blade in the same

plane as the plate, means pivoting said members together through the cutting plates, the cutting blades being on opposite sides of the cutting plates with the plates in opposing relation to each other.

JOSEPH J. FINE.

REFERENCES CITED

The following references are of record in the file of this patent:

UNITED STATES PATENTS

Number	Name	Date
31,674	Perkins	Mar. 12, 1861
1,090,297	Greenwell	Mar. 17, 1914
2,232,361	Bartlett	Feb. 18, 1941

FOREIGN PATENTS

Number	Country	Date
18,164	Great Britain	Sept. 8, 1905