July 30, 1968 J. DOKE 3,394,507

METALLIC STRUCTURE FOR INTERIOR WALLS TO CARRY SHELF BRACKETS AND WALLBOARD

Filed Oct. 4, 1965 3 Sheets-Sheet 1

FIG. 1.

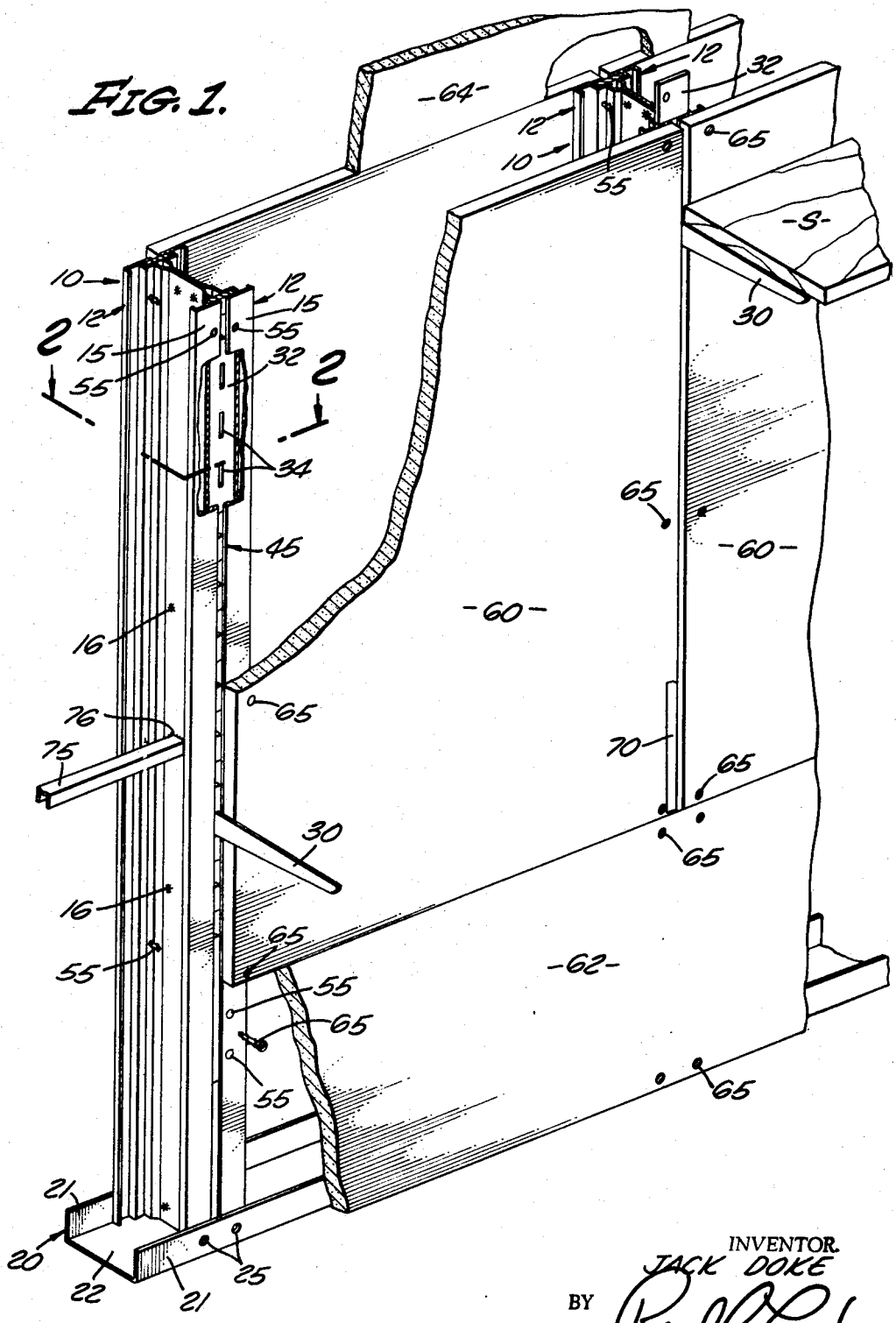

INVENTOR.
JACK DOKE
BY
ATTORNEY

July 30, 1968 J. DOKE 3,394,507

METALLIC STRUCTURE FOR INTERIOR WALLS TO CARRY SHELF BRACKETS AND WALLBOARD

Filed Oct. 4, 1965 3 Sheets-Sheet 2

FIG. 2.

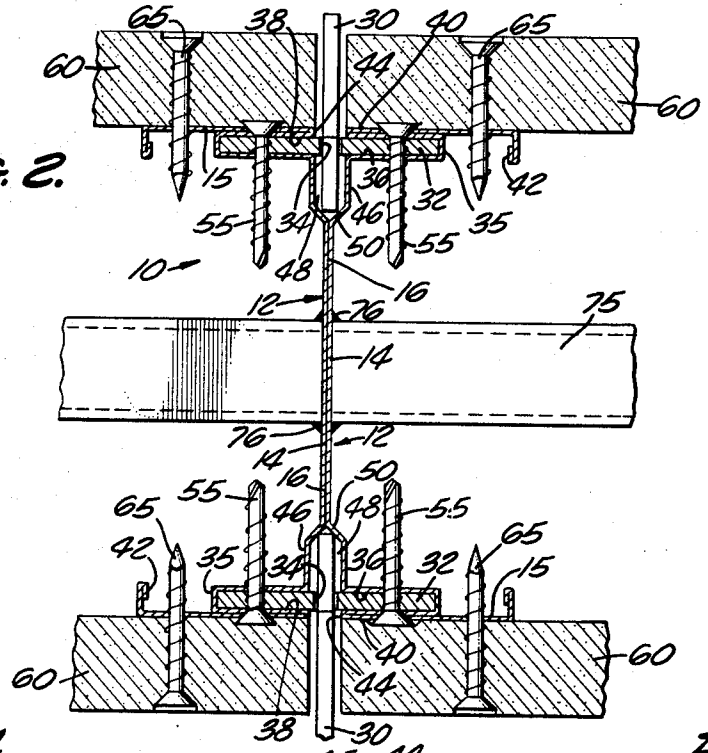

FIG. 4.

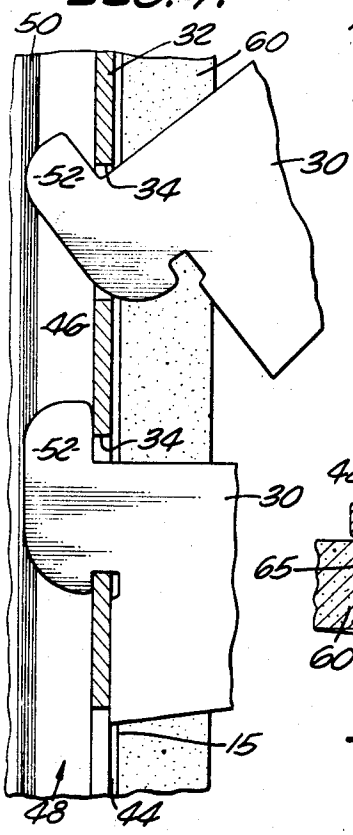

FIG. 5.

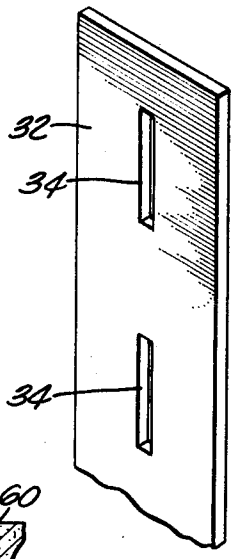

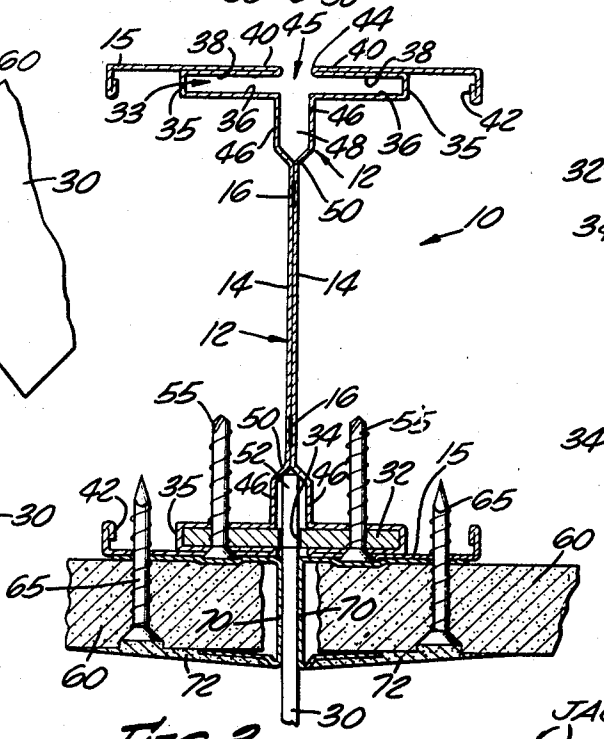

FIG. 3.

INVENTOR.
JACK DOKE
BY Reed D. Lawler
ATTORNEY

July 30, 1968 J. DOKE 3,394,507

METALLIC STRUCTURE FOR INTERIOR WALLS TO CARRY SHELF BRACKETS AND WALLBOARD

Filed Oct. 4, 1965 3 Sheets-Sheet 3

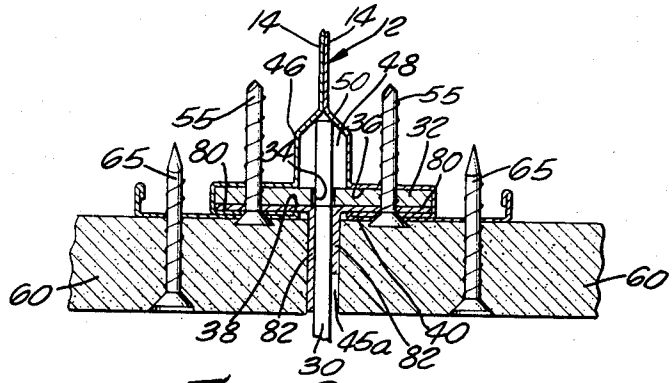

FIG. 6.

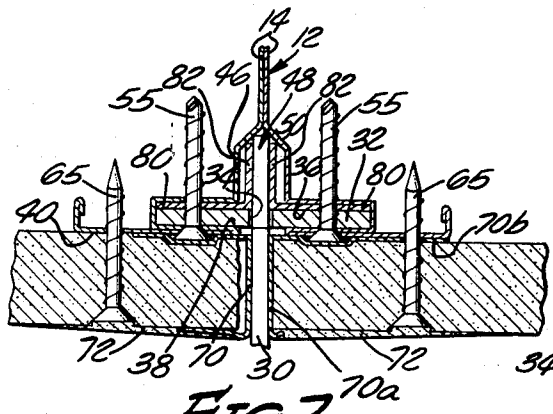

FIG. 7.

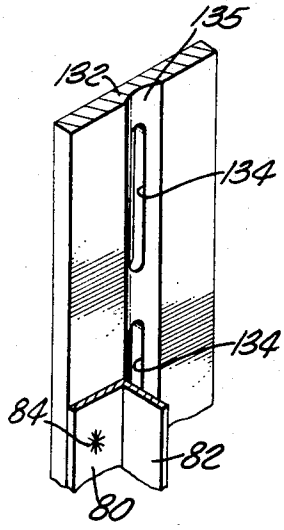

FIG. 10.

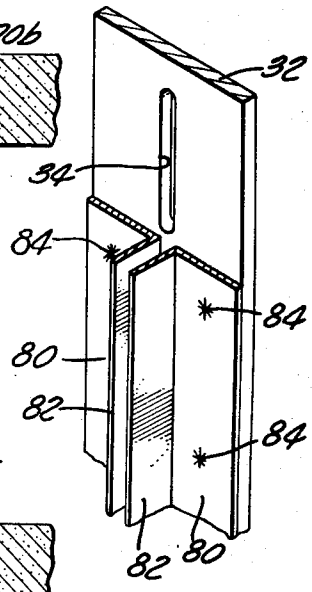

FIG. 9.

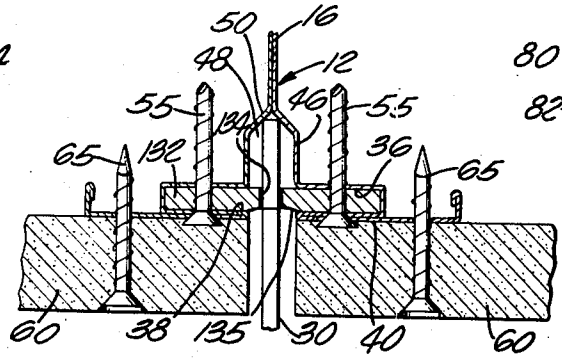

FIG. 8.

INVENTOR.
JACK DOKE
BY Reed C. Lawlor
ATTORNEY

United States Patent Office 3,394,507 Patented July 30, 1968

3,394,507

METALLIC STRUCTURE FOR INTERIOR WALLS TO CARRY SHELF BRACKETS AND WALLBOARD

Jack Doke, Los Angeles, Calif., assignor to Angeles Metal Trim Company, Los Angeles, Calif., a corporation of California

Filed Oct. 4, 1965, Ser. No. 492,373
18 Claims. (Cl. 52—36)

This invention relates to structures for interior walls of buildings and more especially to metal structures particularly adapted to partitioning walls in buildings used as large merchandising establishments, such as department stores wherein much merchandise is desirably displayed on shelves and supporting brackets carried by the interior walls.

A particular object of this invention is to provide simplified upstanding metallic wall stud structure with which well-known wall board, such as plasterboard, may be used as a wall surfacing material, and with which wallboard and vertical wall structure shelf brackets may be used in adjustably mounted positions for the carrying of shelves or for directly supporting merchandise pieces themselves.

An object of the present invention is to provide a vertical or upstanding metal wall structure which is relatively simple to produce, major portions of which are readily assembled in the manufacturing plant, and which portions may be readily installed as partitions in large storerooms and the like, and may be easily set up to extend either up to the ceiling of the storeroom, or to a lesser height, as desired.

An additional object of the invention is to provide a metallic wall stud assembly provided with bar or plate means or standard having bracket receiving slots which means are readily mounted in position in their respective metal stud structures so as to be easily adjusted vertically in order that shelving may be disposed in level positions.

A further object of the invention is to provide a metal stud and wall construction of improved nature wherein a slotted plate or bar for receiving the mentioned shelf brackets may be adjusted with relation to the respective studs and then bound in adjusted position to flanged portions of the metal studs, as by means of self-threading screws which are quickly driven into position by means of known heavy-duty motor driven screwdriver units. Such screws may be employed for the sole purpose of binding the slotted plates in position on the metal studs or for binding wallboard in position on the flanges of the metal studs, or both.

Briefly stated, in the best mode of practicing the invention known at this time, the present invention employs in a stud assembly, two upstanding or vertical channeled metal studs, which may approximate 2" x 4" in overall cross-section. These two channeled metal studs are disposed back-to-back and rigidly secured together, as by means of spot welding. The opposite edges of these channeled studs provide flanges and each flange is in the form of a reverse bend providing an elongated narrow channel which will slidably receive a slotted metal supporting plate for shelf brackets or the like. When the mentioned two channeled studs are secured back to back, the thin shallow channels formed in the opposing flanges of the opposing metal studs provide a slot which extends vertically from end to end of the resultant stud assembly and frictionally receives an elongated slotted plate or bar element to receive shelf brackets, as above indicated, which brackets are to be adjustably mounted in such elongated slotted element. The reversely bent outermost portions of the opposed studs are spaced to provide access by shelf brackets to the slots in the vertical slotted plate

members. Additionally, opposing portions of the wall stud members adjacent their outer edges are shaped to provide, when assembled in back-to-back relationship, an elongated narrow pocket or passageway behind the slotted bracket supporting plate of sufficient depth to receive inner ends of the shelf brackets and narrow enough from side to side to engage inner edge portions of the shelf brackets and limit or prevent them from swaying laterally at their outward ends. Also, standard wallboard slabs, or the like, may be screwed to the outermost walls of the flanges of the opposed channeled wall studs, with opposing edges of such wall boards spaced to accommodate the passage of the inner portions of the mentioned shelf brackets into operative positions.

Other objects of the invention and various features of construction thereof will become apparent upon reference to the following specification and the accompanying drawings which form a part hereof.

In the drawings:

FIGURE 1 is a perspective view of a portion of a wall structure embodying vertical rigid metal wall stud assemblies of this invention, these being shown in operative relation with wallboard slabs and shelf-supporting brackets thereon;

FIG. 2 is a horizontal section through a metal wall stud assembly taken on line 2—2 of FIG. 1 and equipped for mounting shelf brackets and shelves at both sides of the wall;

FIG. 3 is a view similar to that of FIG. 2 showing a similar structure equipped for mounting shelf brackets at only one side of the wall;

FIG. 4 is a fragmentary sectional showing of the mounting of appropriate shelf brackets; and

FIGS. 5 to 10 show variously in fragmentary perspectives and in cross sections various forms of a slotted narrow vertical plate or bar carried in flanges of the wall stud assembly for supporting shelf brackets.

As seen in FIG. 1, and also in FIGS. 2 and 3, metallic wall stud assemblies **10** of this invention are built up from pairs of channeled metal wall stud members, herein termed studs **12**. Each stud **12** has a main web **14** provided at its two edges with laterally disposed channeled flanges **15**. The webs **14** of each pair of studs **12** are arranged back-to-back and rigidly connected together as by means of spot welds **16**.

In constructing a wall structure with stud assemblies **10** as indicated in FIG. 1, a suitable runner **20** is positioned upon the building floor to receive the lower ends of the stud assembly units. In the form illustrated, this runner **20** is a metallic structure of rectangular configuration having a web **22** appropriately secured to the floor and integral upstanding flanges **21** at its sides to receive between them the lower ends of the studs **12**. Desirably, a similar runner (not shown) is provided at an elevated position which may be upon the ceiling of the building, or at a lower position such as on top of a partition if lower partition walls are being installed. Both upper and lower runners **20** frictionally receive the outer walls of the stud flanges **15** between the runner flanges **21**. This relationship is maintained as by means of spot welds or preferably by self-threading screws such as illustrated at **25**.

In practice, both the upstanding studs **12** and the runners **20** provide overall rectangular configurations which correspond, in cross-sectional outline, with typical wooden two-by-fours (2 x 4's), these channeled studs and runners are commonly produced from galvanized steel or iron sheet of about 26 gauge, or about 0.022" thickness. In employing indicated stud assemblies **10** produced from the channeled metal studs **12** by welding them together back-to-back, such stud assemblies may be produced in the shop or the manufacturing plant of any appropriate

length and then moved onto the job for final wall assembly in properly spaced relationship along the runners **20**.

An important aspect of this type of metal wall construction is that provision be made in the stud assemblies for the mounting of shelf brackets or other brackets or supports such as indicated at **30** to support shelves S. In the present construction, this is accomplished through the medium of upstanding slotted narrow plate means or standards or bars **32** which are mounted in shallow vertical channels **33** in the flanges **15**. Each narrow plate or bar **32** is provided along a vertical median line with vertically disposed spaced slots **34** for reception of the inner ends of the respective brackets **30**.

As well illustrated in FIG. 2, each flange **15** of each metal stud **12** is reversely bent at **35** to provide the above-mentioned vertical channel **33** in the respective stud. With this arrangement, as indicated in FIG. 3, the reverse bend at **35** results in an inner vertical wall **36** and a re-entrant opposing intermediate vertical wall **38**. This re-entrant wall **38** leads to a position somewhat short of the projection of the main web or back member **14** of the stud at which position it is again reversely bent to form an outer wall **40**. If desired, this outer portion of the flange **15** may be provided with an inwardly bent terminal flange **42** approximately co-extensive with the bend **35**. With the two opposing studs **12** arranged as illustrated, the two opposing vertical channels **33** of the assembly provide a sufficiently wide channel for insertion of a slotted plate or bar **32**. As also seen in FIGS. 2 and 3, tight or contiguous reverse bends **44** at the inner edge of the walls **40** of the two studs **12** are spaced to provide a vertical entry way **45** to pass the inner end portions of the respective brackets **30** or other supports. Wall portions **46** of the opposing back walls **14** behind the bar **32** are laterally offset to provide a pocket **48** between them into which the end portion of the respective bracket **30** enters after being passed through a corresponding slot **34** in the plate **32**. Thus, the walls **36**, **38**, and **40** of the flange member **15** are all parallel to one another and to the transverse axis of the channel **33**, and these are all normal to the web or back wall **14** and the transverse axis of the pocket **48**. Also, the channels **33**, the entryway **45**, and the pocket **48** combine to form a longitudinally extending T-shaped slot or passageway receiving the bar or standard **32** and the inner end portions or tongues **52** of the brackets **30** or other supports projecting through the slots **34**.

The opposing inner walls of the portions **46** serve in general as means to limit lateral sway of the respective shelf brackets **30**. However, since the entryway **45** is wider than the slots **34** and the thickness of the brackets **30**, the wall portions **46** are tapered toward each other as indicated at **50** for engagement thereby of innermost hooked tongue portions **52** of the respective shelf brackets, as illustrated in FIGS. 2 and 3. With this arrangement the opposite edges of each slot **34** in the plate or bar **32** serve as fulcrums to stabilize the inner portion **52** of the respective bracket held in slightly yielding relation in the tapered portion of the pocket **48** between the inclined walls **50**. Thus the inner end of each bracket **30** is snugly held so that there is very little lateral sway of the outer end of the bracket. This is assured by reason of the fact that the hooked inner end **52** of each bracket **30** is in the form of a locking tongue, such as illustrated in FIG. 4, so that when the tongue **52** drops into the operating position shown in the lower portion of FIG. 4, the bracket **30**, now in its level position, is held with the innermost edges of the tongue bound between the converging wall portion **50**, as seen in FIG. 2.

In practice, when a metallic wall stud assembly **10** is produced by securing together two identical studs **12** in back-to-back relationship as illustrated, a slotted bracket supporting plate or standard or bar **32**, is inserted into the wide but shallow, vertical channel formed by the two opposing channels **33**, with the various slots **34** aligned

with the entryway **45** and with the pocket **48** behind the plate or bar **32**. This assembly, as has been indicated, is desirably performed in the shop or manufacturing plant with the slotted bars held frictionally in place but without the brackets installed, and then transported to the job. The plates or bars **32** are commonly produced from bar stock about ⅛" in thickness, and the thickness of the vertical channel **33** is only slightly greater than the thickness of the element **32**. Thus when the plate or bar element **32** is inserted into the channels **33**, a fairly snug fit is produced, as a result of which the plate or bar **32** retains substantially the position in which it was placed in the plant. Later, when a wall is being constructed on the job and brackets **30** are being adjusted to desired levels, the plate or bar **32** is anchored in the channels **33** by means of self-threading screws **55** which are driven by power-driven screwdrivers into the positions illustrated in FIGS. 2 and 3. Such screws **55** are driven through the various wall portions **36**, **38**, and **40**, and simultaneously through the respective bar **32**.

Desirably, such screws **55** are placed above and below slabs of wallboard **60** employed in surfacing the main portion of the wall being constructed and behind the wallboard slabs **62** and **64**, as presently to be described.

In operating practice, stud assemblies **10** would ordinarily be sent to the job in some adequate length, such as 10 feet, and then cut to shorter lengths on reaching the job, if desired. The wallboard slabs **60** to be employed are ordinarily cut shorter than 10 feet, such as 6 feet in length. These slabs **60** may extend up from closely adjacent the floor, if desired, or they may extend downward only to the top of a foot board section **62**. The lengths of the bracket-supporting plates or bars **32** desirably are somewhat longer than the lengths of the wallboards **60**, but need be only enough longer to make it possible to mount the self-threading screws **55**, which anchor the plates **32**, above and below the main wallboard slabs **60**.

Two main forms of the invention are illustrated. In one, illustrated in FIG. 3 (and also in FIG. 7), a metal trim element **70** is employed to protect the opposing edges of the slab **60**. In this case the screws **55** are located behind the wallboard slabs **62** and **64** so as not to interfere with the positioning of the trim **70**. This condition is represented at the lower left of FIG. 1. In the other, as illustrated in FIG. 2 (and also in FIGS. 6 and 8), no trim member **70** is employed. In this case the screws may be located behind the main wallboard slabs **60**. However, to facilitate the showing in FIG. 3 (and also FIG. 7), the heads of the plate screws **55** are shown underlying the boards **60**, and such an arrangement is indicated also at the upper left of FIG. 1.

In the structure shown in FIG. 2, the slots **34** in the plates **32**, as well as the configuration of the pockets **48** as described, may be relied upon entirely to prevent sway of the outer ends of the brackets **30**. However, in order to avoid possible damage to the edges of the wallboards **60** by excessive lateral movement of the brackets **30**, it may be desirable to employ channeled U-shape metal trim lengths **70**, as shown in FIG. 3 in detail, which enclose the edges of the wallboards **60** and are positioned close enough to the sides of the shelf brackets **30** to more thoroughly stabilize their outer ends.

In mounting the wallboards **60**, self-threading board-retaining screws **65** are caused to extend through the edges of the flanges **15** outside of the locus of the plates or bars **32** as shown in FIGS. 1 and 2. This is also true of the structure of FIG. 3 where the channeled metal trim lengths **70** are employed. In practice, the heads of the bar-retaining screws **55** underlie the horizontal lower wallboard strip **62** and the upper wallboard strip **64** of FIG. 1. The heads of the screws **65** necessarily enter from the outer surface of the wallboards. In the case of the structure of FIG. 3, where the metal trim pieces **70** are employed, finish cement **72** is usually applied over the heads of the screws **65** and the outer flanges of the

trim pieces **70** to prepare a finished surface for painting.

Further stabilization of the constructed wall is effected by horizontal tie bars or brace bars **75** which are passed transversely through holes in intermediate portions of the webs **14** of the upstanding studs **12** and welded in rigid positions as indicated at **76**.

Sometimes there are instances when there is a tendency to overload the shelf brackets **30**, as a result of which the flat bars or standards, or plates **32** tend to warp or buckle or otherwise deform under the load, and there are also instances when it is desirable to supply greater resistance to lateral sway of the shelf brackets **30** than possible with the structures of FIG. 2 without necessity for reliance upon the channeled metal trim pieces **70** of FIG. 3.

Such additional stabilizations with respect to the flat bar **32** and with respect to lateral sway of brackets **30** are accomplished in the embodiment of the invention illustrated in FIGS. 6 to 10.

As shown especially in FIGS. 6, 7, and 9, longitudinally extending bracket stabilizers **80** in the form of angle bars, or angle irons, are employed in longitudinally extending relationship on the bars **32** as particularly illustrated in FIG. 9. These angle bars, or angle bar stabilizers, **80** include in addition to their main, or base, webs, outstanding flanges **82**. The webs are spot welded to their respective bars **32** as indicated at **84** in FIG. 9, or otherwise suitably rigidly secured to the respective bars **32**. Thus, the opposed longitudinally extending flanges **82** are spaced from each other at opposite sides of the slots **34** in position to receive snugly between them the respective shelf brackets **30**.

As illustrated in FIG. 6, the flanges **82** project into outwardly direct spaces **45***a* between the abutting ends of the wallboard slabs **60**, where the spaces **45***a* are disposed in alignment with the space **45** (FIG. 2) between previously described flange structures **15** comprising the flange portions **36**, **38**, and **40**. These angle bar stabilizers **80** are constructed of metal considerably heavier than that of the studs **12** (FIG. 2). The sides of the shelf brackets **30** bear lightly against the inwardly facing sides of the flanges **82**, whereby the latter offer much resistance to lateral sway of the brackets **30**. Also, when the ends of the wallboard slabs **60** are square cut, the slab ends themselves back up the flanges **82** and further offer resistance to sway of the shelf brackets **30**. As desired, the flanges **82** may extend outward so that their outer edges lie flush with the outer faces of the wall slab **60** as indicated at the left in FIG. 6, or they may extend a portion of the way outward in the respective space **45***a* as indicated at the right of FIG. 6, opposed flanges **82** extend equally.

In addition to the stabilizing of the bracket arms **30** against sway, the rigid mounting of the angle iron stabilizers **80** upon the respective bars or plates **32** reinforces the bar or plate **32** in each instance. As a result, the tendency of the respective bar or plate **32** to bend or buckle under an overload placed upon the shelf brackets **30** is greatly reduced.

If preferred, the stabilized bar unit **32** of FIG. 9 may be reversed from the position shown in FIG. 6 and disposed in the position shown in FIG. 7, so that the flanges **82** extend back into the pocket **48** between the wall portions **46** of the stud walls **14**. In this instance, of course, the flanges **82** will both be of the same narrower width in order to be accommodated in the pocket **48**. Here the flanges **82** stabilize the inner end **52** of the bracket **30** between them. In this form of FIG. 7, it may be also desirable to employ channeled metal trim pieces **70** of FIG. 3, especially as shown at the left of FIG. 7. However, as shown at the right in FIG. 7, it may be desirable to form the inner end of the wallboard slab **60** in square cut relation and abutting against an outwardly projecting wall **70***a* of the metal trim piece whereby the wall **70***a* will be stabilized by the edge of the wallboard slab **60** itself. In this instance, the outer flange of the metal trim **70** may be eliminated, and its inner flange **70***b* extended laterally sufficiently to be penetrated by an adjacent self-threading screw **65**.

Another variation designed to prevent warping or buckling of the flat bars or standards or plates **32** is illustrated in FIGS. 8 and 10. Here, the flat bar **132** is composed of heavier material than that used in bars **32**. For example, bars of 3/16 of an inch thickness may be employed. Here, slots **134** are provided along the median line of the bar to correspond with slots **34**, and the middle portions of the bar **132** along its median line are routed out or grooved at **135** to reduce the thickness at the median line to the standard thickness of 1/8 inch so that the slots will receive standard shelf brackets **30** commonly found on market and represented in FIGS. 1 and 4. With this bar construction **132**, the reinforcing stabilizers **80** might be additionally used, as is illustrated at the lower left-hand corner of FIG. 10, if desired to minimize side sway.

If is thus seen that this invention provides an improved wall structure assembly which is easily assembled in a factory but which facilitates mounting of shelf brackets to mount shelves in level position at arbitrary or predetermined heights above a floor when installed in the wall structure of a building.

The invention claimed is:

1. A wall stud assembly including:

a pair of upstanding channeled metal stud members having main webs disposed in opposed substantially parallel relation and providing opposed spaced flange portions adjacent edges of said webs;

said opposed flange portions having therein opposed shallow vertical channels extending longitudinally of said stud members to adjustably receive therein a metal bar, and edge portions of said webs providing between them a vertical passage behind the spacing between said opposed flange portions,

means rigidly connecting such stud members in said parallel relation;

slotted bar means positioned in said shallow channels of said opposed flange portions and having slots communicating with said passage between said webs and with the spacing between said opposed flange portions for reception of inner ends of support,

said flange portions also providing means for engaging and supporting wallboards;

and means rigidly securing said slotted bar means in adjusted position in said vertical channels.

2. A wall stud assembly as in claim **1** wherein said standing channeled metal stud members are provided with opposed flange portions and slotted bar means so supported in said channels at both sides of said main webs.

3. A structure as in claim **1** wherein said slotted bar means carry angled flanges along opposite sides of the slots to reinforce said bar and pass said inner ends of said supports.

4. A combination as in claim **1** wherein said bar means is reinforced alongside said slots and grooved along said slots to reduce bar means thickness along the line of said slots.

5. A combination as in claim **1** wherein said bar means carries longitudinally thereof alongside said slots, means reinforcing said bar means to resist deformation under load on said supports.

6. A combination as in claim **5** wherein said reinforcing means includes angled flanges.

7. A wall stud assembly including:

a pair of vertical channeled metal stud members having main webs arranged back-to-back and having opposed flange portions at adjacent edges of said webs for carrying wallboard;

means rigidly connecting said stud members in assembled relation;

said flange portions having reversely folded portions providing a vertical passageway;

slotted plate means vertically disposed in said vertical passageway for vertical adjustment of such plate means therein and providing slots to receive inserted supports at their inner ends;

and means rigidly securing said slotted plate means in adjusted position in said vertical passageway.

8. An assembly as in claim **7** wherein the securing means extends through walls of said passageway.

9. A combination as in claim **8** wherein said securing means are self-threading screws.

10. A combination including a wall stud assembly as in claim **8**, and wallboards secured to the outermost walls of said opposed flange portions.

11. A combination as in claim **10** wherein securing means extend through said wallboards and through said flange means.

12. A wall stud assembly as in claim **7** wherein said slotted plate means carries longitudinally thereof alongside slots therein means reinforcing said plate means to resist buckling under overload.

13. An assembly as in claim **12** wherein said reinforcing means includes an angle bar having a flange located in said pocket, and means for engagement by the inner end of a support to stabilize the latter.

14. An assembly as in claim **7** wherein said slotted plate means is reinforced alongside slots therein and the plate is grooved along the line of the slots to reduce the plate thickness at the locus of said slots.

15. A wall stud assembly including:

a pair of upstanding channeled sheet metal stud members having main webs disposed in opposed substantially parallel relation, said stud members providing opposed spaced flange portions adjacent edges of said webs;

said flange portions having reversely folded portions providing opposed vertical channels forming a combined vertical passageway to receive slideably an adjustable vertical slotted bar, the reversely folded portions being opposed and providing between them a vertical entryway into said passageway;

said reversely folded flanges at said entryway being outwardly folded in each instance to lie in contiguous relation upon the flange wall forming the outer wall of the respective channel, and to provide an outermost face for attachment thereto of an edge portion of a wallboard, such edge portions of opposed wallboards lying in a spaced relation to permit access to said entryway;

and a slotted bar means vertically disposed in said vertical passageway;

means through said slotted bar means and secured to the flanges adjustably holding said slotted bar means in a vertical position relative to the vertical passageway;

and support means extending between said edges of said wallboard through said entryway into slot means in said vertical bar means.

16. An assembly as in claim **15** wherein said plate means carries longitudinally thereof, alongside the slot means, reinforcing means to resist deformation under load on said support means.

17. An assembly as in claim **16** wherein said plate means is grooved along said slots to reduce plate thickness adjacent said reinforcing means.

18. In combination in a wall structure:

a pair of vertical channeled metal stud members having main webs

and having opposed flanges at adjacent edges of said webs,

means rigidly securing said main webs in operative relation;

said opposed flanges being spaced apart and providing opposed shallow passageways extending vertically of said stud members to form a combined vertical channel for frictionally receiving opposite faces of a plate;

a plate vertically disposed in said combined channel for adjustment thereof in such channel and having slots communicating with the spacing between the opposed flanges for reception of the inner ends of support means;

and means fixedly retaining said slotted plate in adjusted position in said combined channel in said flanges;

and wallboards secured to said opposed flanges and in spaced relation to provide for passage of said inner ends of said support means.

References Cited

UNITED STATES PATENTS

2,558,428	6/1951	Fuller et al.	52—27
2,633,945	4/1953	Millier	52—729
2,691,502	10/1954	Jones	52—36
2,971,805	2/1961	Weiss	52—36
3,081,718	3/1963	Shoffner	52—36
3,193,885	7/1965	Gartner et al.	52—36
3,250,584	5/1966	Tassell	52—127

FOREIGN PATENTS

778,686	2/1935	France.
1,227,316	3/1960	France.
1,315,429	12/1962	France.

FRANK L. ABBOTT, *Primary Examiner.*

JAMES L. RIDGILL, *Assistant Examiner.*

PO-1050
(5/69)

UNITED STATES PATENT OFFICE
CERTIFICATE OF CORRECTION

Patent No. 3,394,507 Dated July 30, 1968

Inventor(s) Jack DOKE

It is certified that error appears in the above-identified patent and that said Letters Patent are hereby corrected as shown below:

Column 5, line 50 (Page 15, line 3) change ", opposed" to -- . Opposed--.

Column 8, line 4 (claim 29, line 2) change "plate" to --slotted bar--.

Column 8, line 8 (claim 30, line 2) change "plate" to --slotted bar--.

SIGNED AND
SEALED
NOV 10 1970

(SEAL)
Attest:

Edward M. Fletcher, Jr.
Attesting Officer

WILLIAM E. SCHUYLER, JR.
Commissioner of Patents