Aug. 3, 1937. E. STRANSZKY 2,088,728

CONTROL MECHANISM FOR HEAT EXCHANGE APPARATUS

Filed Jan. 8, 1935 3 Sheets-Sheet 1

Fig. 1

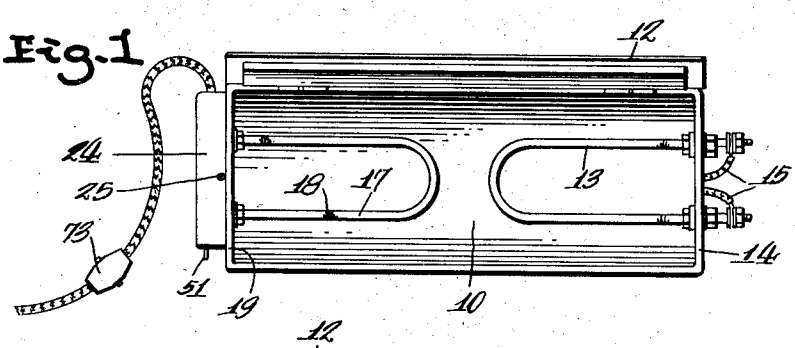

Fig. 2

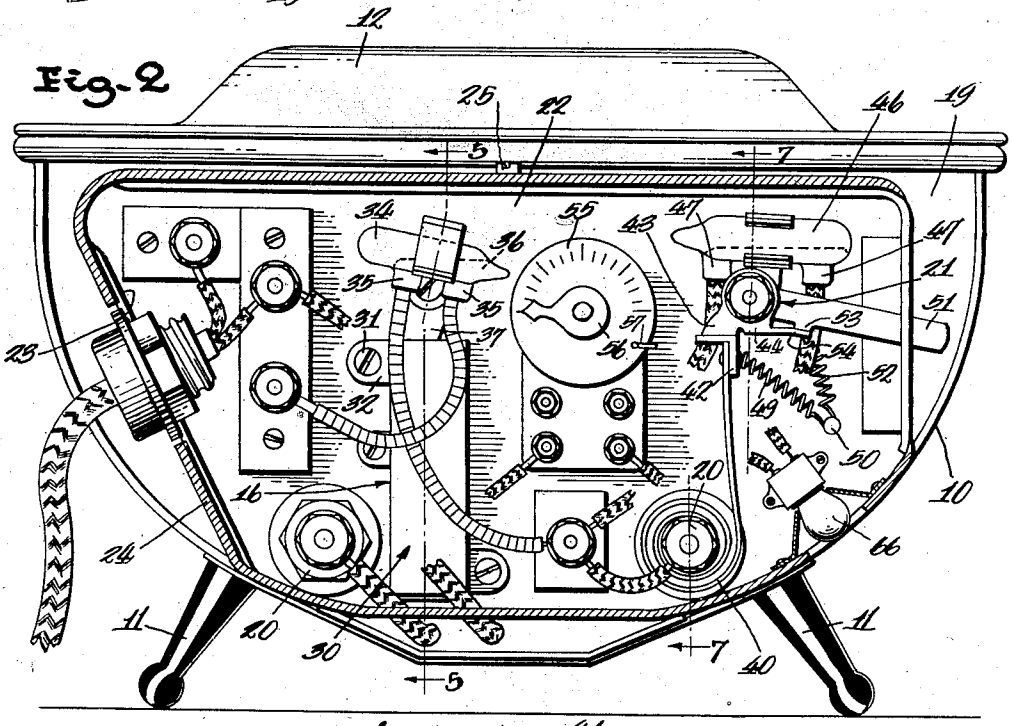

Fig. 3

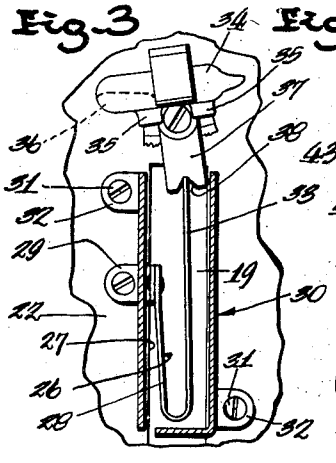

Fig. 4

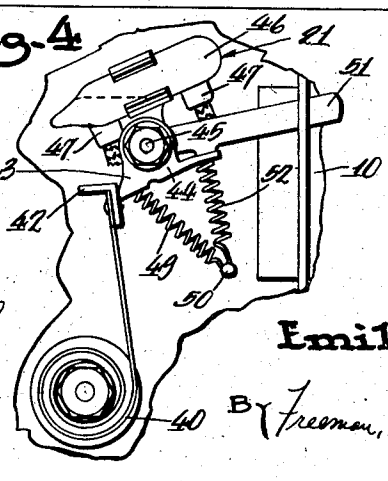

Emil Stranszky
INVENTOR

BY Freeman, Sweet, Albrecht & Weidman
ATTORNEYS

Aug. 3, 1937. E. STRANSZKY 2,088,728

CONTROL MECHANISM FOR HEAT EXCHANGE APPARATUS

Filed Jan. 8, 1935 3 Sheets-Sheet 2

Fig. 5

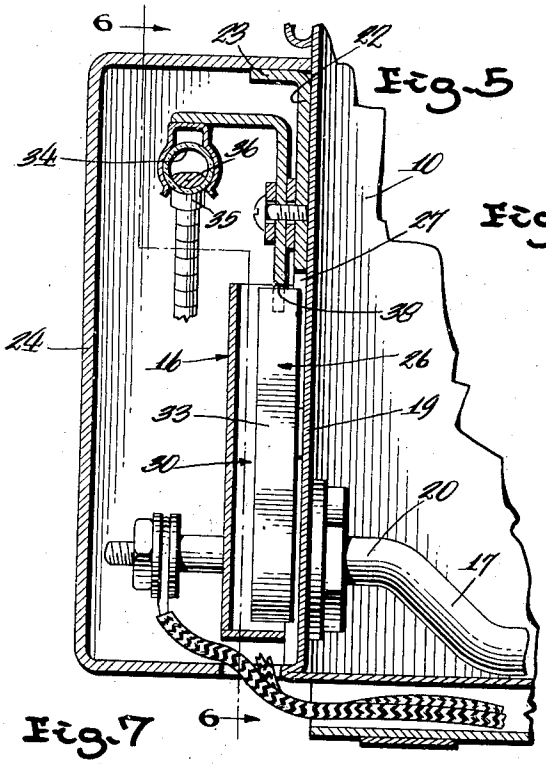

Fig. 6

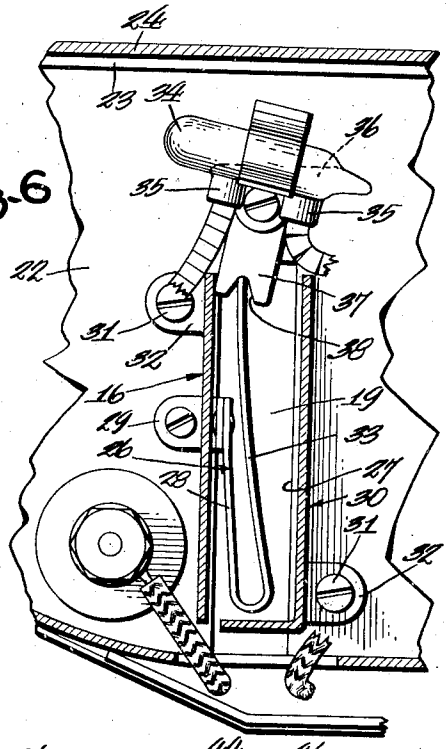

Fig. 7

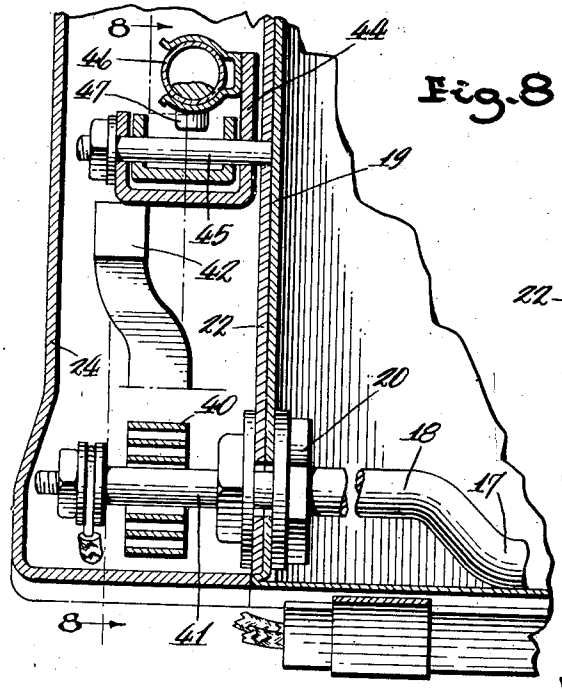

Fig. 8

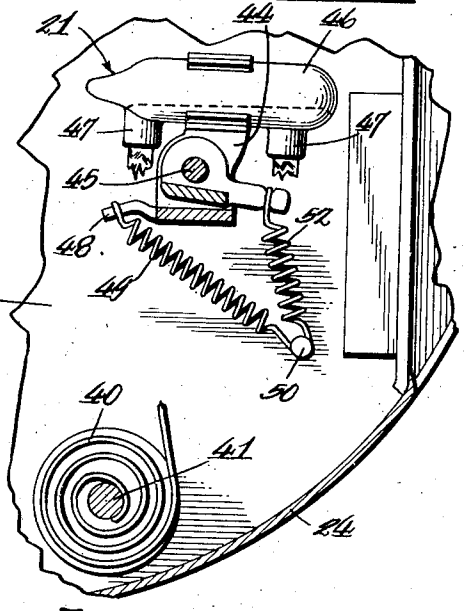

Emil Stranszky
INVENTOR
By Freeman, Sweet, Albrecht & Weidman
ATTORNEYS

Aug. 3, 1937. E. STRANSZKY 2,088,728

CONTROL MECHANISM FOR HEAT EXCHANGE APPARATUS

Filed Jan. 8, 1935 3 Sheets-Sheet 3

Fig. 9

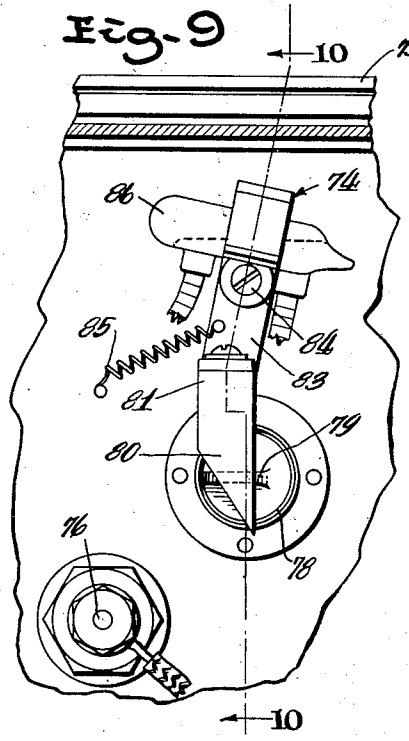

Fig. 10

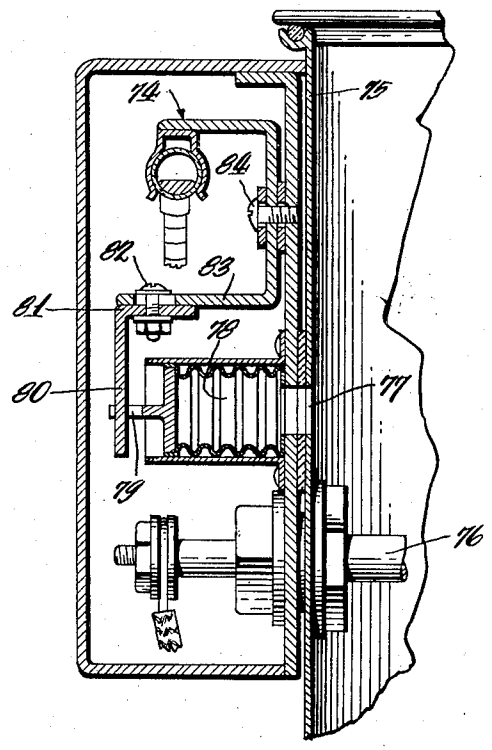

Fig. 11

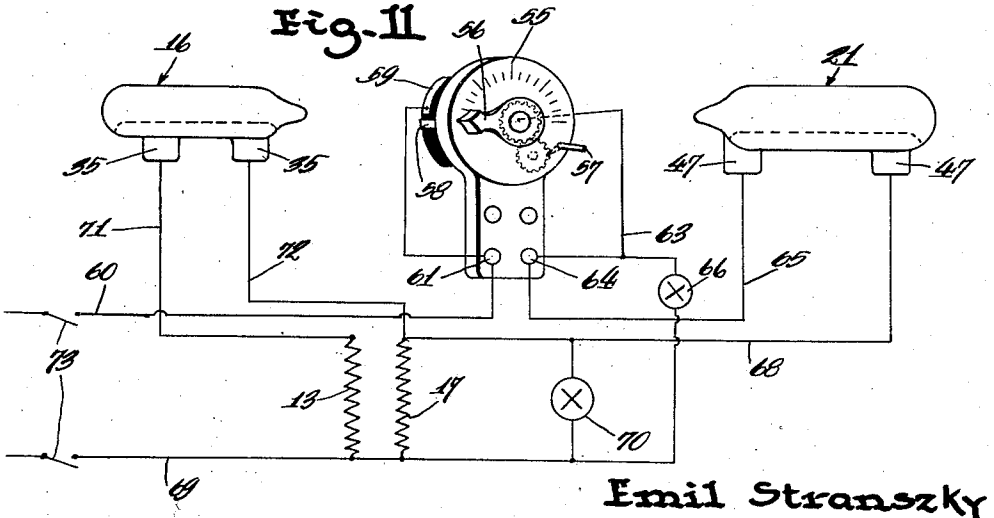

Emil Stranszky
INVENTOR
By Freeman, Sweet, Albrecht & Weidman
ATTORNEYS

Patented Aug. 3, 1937 2,088,728

UNITED STATES PATENT OFFICE

2,088,728

CONTROL MECHANISM FOR HEAT EXCHANGE APPARATUS

Emil Stranszky, Erie, Pa., assignor to American Sterilizer Company, Erie, Pa., a corporation of Pennsylvania

Application January 8, 1935, Serial No. 836

5 Claims. (Cl. 219—20)

This invention relates to control mechanism for heat exchange apparatus, and has for an object the provision of new and improved mechanism of this character.

In the drawings accompanying this specification and forming a part of this application I have shown, for purposes of illustration, various forms which my invention may assume, and in these drawings:

Figure 1 is a plan view of a sterilizing container, showing the invention applied thereto.

Figure 2 is an enlarged elevational view of the sterilizing container, showing the control mechanism employed in connection therewith,

Figure 3 is an enlarged fragmentary elevational view of one of the control devices in one position of operation,

Figure 4 is an enlarged fragmentary elevational view disclosing another of the control devices,

Figure 5 is an enlarged vertical sectional view corresponding substantially to the line 5—5 of Figure 2,

Figure 6 is an enlarged vertical sectional view corresponding substantially to the line 6—6 of Figure 5,

Figure 7 is an enlarged vertical sectional view of the invention corresponding substantially to the line 7—7 of Figure 2,

Figure 8 is an enlarged fragmentary vertical sectional view corresponding substantially to the line 8—8 of Figure 7,

Figure 9 is a fragmentary elevational view disclosing another embodiment of the invention,

Figure 10 is a vertical sectional view corresponding to the line 10—10 of Figure 9, while

Figure 11 is a diagrammatical view showing the layout of electrical circuits employed in connection with the invention.

Referring first to Figures 1 through 8, and Figure 11, the invention is shown as applied to a sterilizing container 10 of any suitable form, adapted to contain a liquid into which surgical instruments and the like may be placed and the liquid raised to sterilizing temperature, the container being provided with supporting feet 11, and a hinged cover 12 in the usual manner. Secured along the bottom of the container 10 is a looped electrical immersion heater 13 of any well known type, the ends of which extend through the adjacent end wall 14 of the container 10, and are connected with an electrical circuit through conductors 15 which extend beneath the bottom of the container 10 and are connected with a control device indicated generally by the reference character 16. Another looped immersion heating element 17 is disposed within the container 10 so as to extend along the bottom thereof, a portion of one leg of the heating element 17, however, being offset, as at 18, to extend some distance above the bottom of the container 10 (Figures 1 and 7) for a purpose hereinafter referred to, the ends of the heating element 17 extending through the wall 19 of the container 10, and secured in position by securing nuts and washers, as indicated at 20, and connected with another control mechanism indicated generally by the reference character 21.

Fixed to the end wall 19 of the container 10, by any suitable means, as by spot welding, is a supporting plate 22 having an angular flange 23, which extends along the top and side edges of the plate 22, preferably being omitted at the bottom of the plate, and the flange 23 serves as a support for a box-shaped cover 24 telescopically fitted over the flange 23, and held in place by screws 25, the flanged plate 22 and the cover 24 together forming a housing for the control device 16 and the control device 21, as well as another control mechanism which will be referred to hereinafter.

The control device 16 comprises a curved bimetallic strip 26, disposed closely adjacent to the wall 19 of the container 10, the plate 22 being cut out as at 27 for effecting this purpose, and one end 28 of one leg of the strip 26 is secured to a bracket 29 carried by the plate 22, and the strip 26 is surrounded by a housing 30, secured to the plate 22 by screws 31 extending through ears 32, the free end 33 of the strip 26 being adapted to move to and fro, dependent upon changes in temperature transmitted directly thereto through the exposed wall 19 of the container 10, and to actuate a mercury-switch having a tube 34 with spaced contacts 35, and containing a quantity of mercury, as indicated at 36, and the tube 34 is carried by a pivoted bracket 37, the end of which is notched, as indicated at 38, for the reception of the actuating end 33 of the strip 26, oscillation of the tube 34 effecting make and break of the circuit which supplies the heating element 13.

The control mechanism 21 cooperates with the heating element 17 and comprises a bimetallic strip arranged in the form of a coil 40, one end of which is fixed to the projecting end 41 of the heating element 17, as best shown in Figure 7, the free end of said coil being provided with an angular piece 42 adapted to engage one end 43 of a pivoted bracket 44, which is oscillatable about a pivot pin 45, fixed to the plate 22, the portion of the bracket 44 above the pivot pin 45 carrying a mercury tube 46, having contacts 47,

and containing mercury adapted to cooperate therewith, the contacts 47 being interposed in a circuit supplying the heating element 17. The bracket 44 is provided with an extension 48 to which is attached one end of a tension spring 49, the opposite end of the spring being attached to a fixed pin 50, so that the bracket 44 is normally held in position to maintain the circuit through the mercury-switch. A setting handle 51 is also pivotally mounted upon the pivot pin 45 and a tension spring 52 is employed to maintain the extension 53 of the handle in engagement with a projection 54 on the bracket 44, so that while the handle 51 may be employed to reset the bracket 44 with reference to the angular piece 42 when the latter is cool and bears toward the bracket 44, when it reaches its position beneath the bracket 44, upward movement of the handle 51 has no effect other than to stretch the spring 52, thereby avoiding possibility of breakage, and insuring that once the device is set it must go through its cycle of automatic operation.

A time control device is also employed in connection with the invention, being indicated generally by the reference character 55. This time control device may be of a well known character, usually including an indicator 56, adapted to be turned to any desired position, carrying an arbor controlled by suitable clock mechanism, so that movement of the arbor takes place over a measured time interval, and suitable means indicated at 57, is usually provided for arresting movement of the arbor at any time. Connected to the arbor is an arm 58 adapted to traverse an arcuate contact plate 59, interposed in the circuit embracing the control devices 16 and 21, and heating elements 13 and 17.

In Figure 11 the electrical layout is diagrammatically illustrated, and as shown, one end of a feed wire 60 is connected to terminal 61 of the clock mechanism 55, and to the plate 59, and the arm 58 of the timing device is electrically connected by a conductor 63 with the terminal 64, and to one of the contacts 47 of the control device 21 by a conductor 65, and a pilot lamp 66 is interposed in circuit with the clock arbor, arranged closely adjacent to the apparatus; the other contact 47 of the control device 21 leads to the heating element 17 through a conductor 68, and the heating element 17 has its return through the feed wire 69, a second pilot lamp 70 being arranged in parallel with the heating element 17, the pilot lamp 70 being disposed at some suitable point remote from the apparatus. The control device 16 has one of its contacts 35 connected to the heating element 13 by a conductor 71, while the other contact is connected to the conductor 68 by a conductor 72. Any ordinary snap switch 73 may be employed to control admission of electrical energy to the apparatus.

In operation the liquid is supplied to the container 10 in suitable amount, and the switch 73 having been operated to admit electrical energy to the apparatus, and assuming the control devices 16 and 21 to be in the position shown in Figure 2, with the timing device 55 set to operate over a predetermined time, both the heating elements 13 and 17 will be energized, and heat the liquid within the container. When the temperature of the liquid has risen to the desired extent, heat radiating from the wall 19 onto the bimetallic element 26, will cause the same to oscillate the bracket 37 in a counter-clockwise direction, and open the circuit which includes the heating element 13, and the temperature of the liquid having been raised the desired amount the heating element 17 will maintain the temperature at the desired point; of course should the temperature again drop the thermostatic element 26 will oscillate the bracket 37 in a clockwise direction and re-establish the circuit through the heating element 13.

While the timing device 55 continues to operate, the pilot lamps 66 and 70, as well as the heating element 17, continue to operate, but when the timing device reaches the end of its predetermined period of operation, it breaks the circuit supplying the pilot lamps and control device 21; furthermore if the time period expires while the control device 16 has its circuit established, it cuts out the control device 16 also.

Should the level of the liquid in the container 10 at any time approach a dangerous point, so as to expose the offset 18 of the heating element 17, the exposed offset will heat up rapidly enough to actuate the thermostatic coil 40 and cause the angular portion 42 to move out from beneath the bracket 44, and the spring 49 will then rotate the mercury tube 46 in a counter-clockwise direction and break the circuit energizing the heating element 17. So long as the angular piece 42 of the coil 40 is in the position shown in Figure 2, however, the device must go through its automatic operation just described, it being evident that the pivoted bracket 44 cannot be moved by manipulation of the handle 51, since upward movement of this handle merely stretches the spring 52; after the device has operated in the manner described, it may be reset by pushing down upon the handle 51 which causes rotation of the bracket 44 in a direction to permit the angular piece 42 to resume its position therebeneath.

A somewhat different embodiment of the invention is disclosed in Figures 9 and 10, wherein a control device 74 is disclosed which may be actuated by pressure. In this construction a liquid container 75 may have its contents heated by any suitable means, a heating element 76 being shown, and communicating with the container 75, through an opening 77, is a bellows 78, carrying at its outer end a cam 79, engageable with the lower beveled end 80 of an extension 81 adjustably carried through a bolt and slot arrangement 82 by the lower end of a pivoted bracket 83 pivotally supported as at 84, the bracket 83 being urged in a clockwise direction by a tension spring 85, and above the pivoted support 84 the bracket carries a mercury tube 86 of the character already referred to, whereby rise in pressure beyond a predetermined extent in the container 75 will cause expansion of the bellows 78, swinging of the bracket 83 against the tension of the spring 85, and rocking of the mercury tube 86 to break the circuit supplying the heating element 76.

Although the control mechanism is disclosed as applied to a liquid container, it will be appreciated that the control mechanism may be used in many other situations wherein changes in temperature or pressure may be employed to actuate control mechanism of the character described.

From the foregoing, it will be apparent to those skilled in the art that the embodiments herein disclosed accomplish at least the principal objects of the invention, but also, that the construction is adaptable to a wide variety of uses, and embodies advantages other than those herein discussed, and also, that the particular embodiments may be variously changed and modified

without departing from the spirit or scope of the invention, and accordingly, it will be understood that the above disclosure is illustrative only, and that my invention is not limited thereto.

I claim:

1. An apparatus of the character described, comprising: a liquid container; an electrical immersion heating element disposed within said container; a source of electrical energy; a mercury-switch having conductors forming a circuit with said source and with said heating element; a bracket carrying said mercury-switch and pivotally mounted on said apparatus; a bimetallic looped thermostat responsive to the temperature within said apparatus for operating said bracket to actuate said mercury-switch and make and break the circuit through said heating element; and clock mechanism interposed in circuit with said mercury-switch having means for making and breaking said circuit independently of said mercury-switch.

2. A sterilizing container, comprising: a plurality of electrical heating elements in said container, adapted to be immersed by liquid therein; electric feed conductors; a first heating element connected across said feed conductors, and a second of said elements connected in parallel with said first element; a first thermally responsive means, responsive to a predetermined temperature within said container, for cutting on and off said second element, said first element being operable normally to maintain said liquid at said predetermined temperature after said second heating element has been cut off; a second thermally responsive means, responsive to an abnormal condition, and so constructed and arranged as to cut out said first element, and also said second element should the same be energized when said second thermally responsive means is actuated; and time controlled means, operable after lapse of a predetermined time, to cut out one or both of said heating elements depending upon whether one or both are energized when said time controlled means are actuated.

3. A sterilizing container, comprising: a plurality of electrical heating elements in said container, adapted to be immersed by liquid therein; electric feed conductors; a first heating element connected across said feed conductors, and another of said elements connected in parallel with said first element; a first thermally responsive means responsive to a predetermined temperature within said container for cutting on and off said second element, said first element being operable normally to maintain said liquid at said predetermined temperature after said second heating element has been cut off, said second element having an offset portion constructed and arranged to be exposed in advance of the remainder of said second element when the level of said liquid falls; a second thermally responsive means, responsive when said offset portion of said first element is exposed, to cut out said first element and also said second element should the same be energized when said second thermally responsive means is actuated; and time controlled means operable after lapse of a predetermined time to cut out one or both of said heating elements depending upon whether one or both are energized when said time controlled means are actuated.

4. An apparatus of the character described comprising: electrical heating means in said container, having a plurality of heating sections adapted to be immersed by liquid therein; electric feed conductors for said electrical heating means; first thermally responsive switch means in series with a first section of said heating means, responsive to a predetermined temperature within said container for cutting on and off said first section; a second section of said heating means having an offset adapted to be exposed in advance of the remainder of said sections; a second thermally responsive switch means, constructed and arranged to be actuated when said offset is exposed to break the circuit therethrough, and through said first thermally responsive switch means, when the latter is closed; and clock mechanism interposed in circuit with said first and second thermally responsive switch means for breaking said circuit independently of said first and second thermally responsive switch means.

5. An apparatus of the character described comprising; electrical heating means in said container, having a plurality of heating sections adapted to be immersed by liquid therein; electric feed conductors for said heating means; first thermally responsive switch means in series with a first section of said heating means, responsive to a predetermined temperature within said container for cutting on and off said first section; a second section of said heating means having an offset adapted to be exposed in advance of the remainder of said sections; a second thermally responsive switch means, including a pivotally mounted mercury switch, and a looped bimetallic thermostatic element, responsive when said offset is exposed to actuate said mercury switch, said second switch means being constructed and arranged to break the feeder circuit through said second section, and also through said first section when said first thermally responsive switch means are closed; and clock mechanism interposed in circuit with said first and second thermally responsive means for breaking said circuit independently of said first and second thermally responsive switch means.

EMIL STRANSZKY.