Dec. 29, 1964 A. J. WEISS 3,163,322

CARRIER FOR SINGLE CHIME ALUMINUM CANS

Filed April 5, 1963

FIG. 1

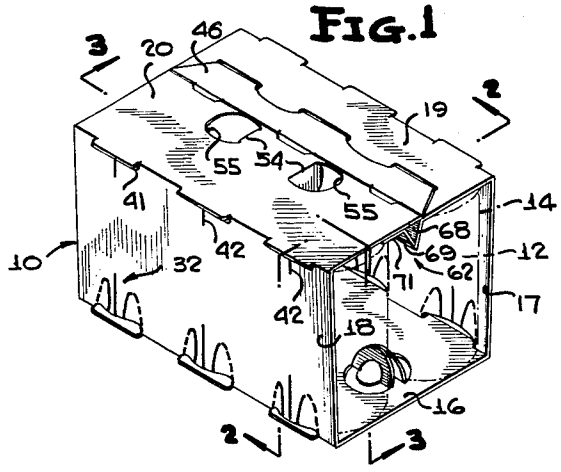

FIG. 2

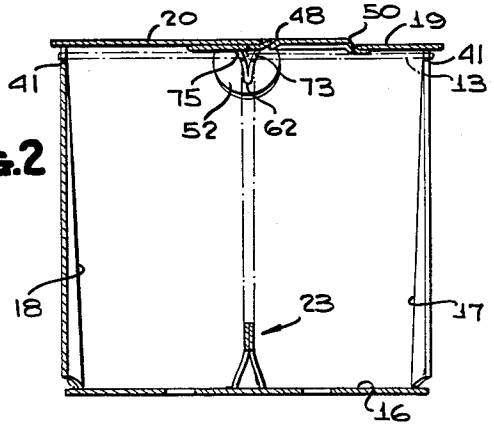

FIG. 3

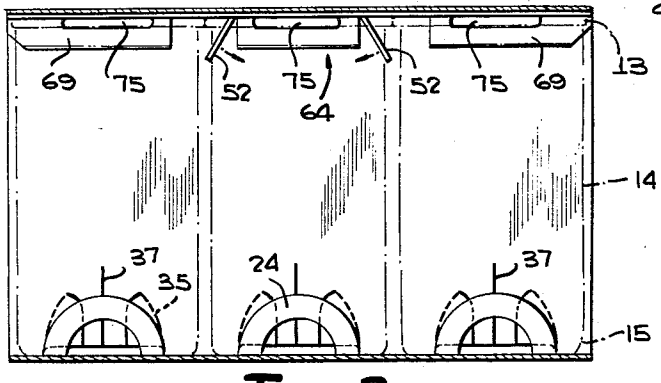

FIG. 4

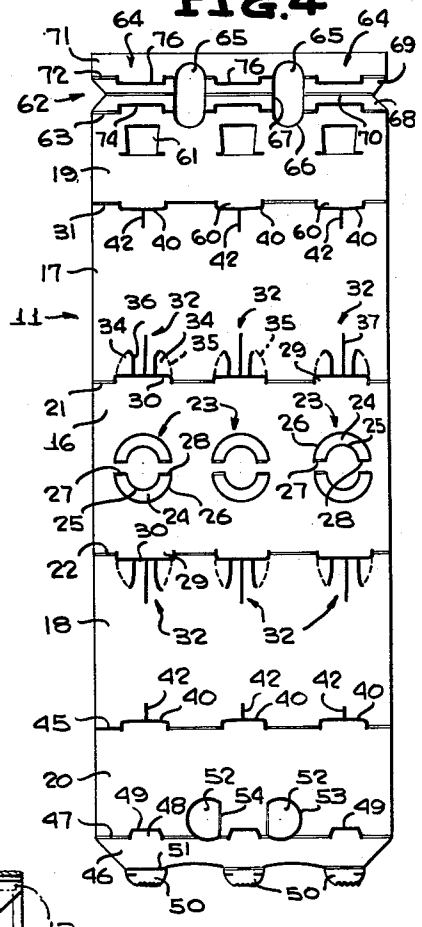

INVENTOR

ARTHUR J. WEISS

BY

Mann, Porter, Diller & Stewart

ATTORNEYS

United States Patent Office 3,163,322 Patented Dec. 29, 1964

3,163,322

CARRIER FOR SINGLE CHIME ALUMINUM CANS

Arthur J. Weiss, Bergenfield, N.J., assignor to Continental Can Company, Inc., New York, N.Y., a corporation of New York

Filed Apr. 5, 1963, Ser. No. 270,838
11 Claims. (Cl. 220—115)

This invention relates to a carrier for containers and more particularly to a carrier for containers of the type having only a single chime.

It is an object of this invention to provide a carrier for holding a plurality of containers of the type having a chime at one end thereof.

A further object of this invention is to provide the carrier with a divider member which includes a plurality of chime-receiving openings therein.

Another object of this invention is to provide a plurality of cut-outs for separating the divider member into a plurality of spacer members.

A further object of this invention is to provide a pair of chime-receiving openings in each of the spacer members for receiving the chimes of containers which are aligned in a pair of adjacent rows.

Another object of this invention is to provide a pair of flaps in an outer panel and to connect the divider member to an inner panel such that the flaps in the outer panel are in alignment with the openings in the divider member so that the flaps are engageable with the opposite ends of one of the spacer members.

Another object of this invention is to provide a carrier including a pair of inner and outer closure panels, a pair of side panels depending therefrom, and a bottom panel having a plurality of separating members which are in alignment with a plurality of container engaging means in each of the side panels.

Another object of this invention is to provide a container in which the overlapping inner and outer panels are wider in effective combined width than the bottom panel such that the side panels converge toward the bottom panel and the container engaging means in the side panel snugly embrace the container bodies.

A further object of this invention is to provide a wrap-around blank for a carrier which includes an inner closure panel and an outer closure panel, a divider member connected to the inner closure panel, a plurality of spaced cut-outs in the divider member for separating the divider member into a plurality of spacer members, a plurality of flaps in the outer closure panel which are in alignment with the cut-outs so that the flaps may be inserted through the cut-outs whereby the flaps may be engageable with the central ones of the spacer members to reinforce the closure panels when the carrier is being handled.

With the above and other objects in view which will hereinafter appear, the nature of the invention will be more clearly understood by reference to the following detailed description, the appended claimed subject matter and the several views illustrated in the accompanying drawing.

In the drawing:

FIGURE 1 is a perspective view of an assembled carrier for a plurality of containers, with the containers shown in phantom lines, and shows a bottom panel having separating members for separating the containers, a pair of upstanding side panels attached to the bottom panel and having a plurality of container engaging members conforming to a lower portion of the containers, and a pair of overlapping and interlocked top panels including a divider member for spacing the upper portion of the containers.

FIGURE 2 is a transverse vertical view taken on line 2—2 of FIGURE 1, with the containers shown in phantom lines, and shows a plurality of chime-receiving openings in the side panels and in the center-divider member with a chime of the container being received therein, and also shows a flap connected to the outer one of the top panels depending into the body of the carrier in alignment with the divider member.

FIGURE 3 is a longitudinal vertical sectional view taken on line 3—3 of FIGURE 1 and shows the divider member as being separated into a plurality of spacer members and flaps in the outer top panel being disposed at opposite ends of the central one of the spacer members.

FIGURE 4 is a plan view of a blank for forming the novel carrier which is illustrated in FIGURES 1 through 3.

Referring to the drawings in detail, there is shown a carrier, generally indicated by the numeral 10, which is readily assembled from a wrap-around paperboard blank, generally indicated by the numeral 11, for conveniently packaging a plurality of containers 12. The containers 12 are of the type which have a single chime 13 at the top thereof, a cylindrical body wall 14 and a smoothly rounded end connecting portion 15.

The blank 11, as shown in FIGURE 4, includes a bottom panel 16, a first side panel 17, a second side panel 18, an inner closure panel 19, and an outer closure panel 20.

The bottom panel 16 is separated from the first side panel 17 by an interrupted transverse fold line 21 and from the second side panel 18 by an interrupted transverse fold line 22. A plurality of separating members, generally indicated by the numeral 23, are spaced transversely of the blank 16 and include a pair of ring portions 24 which are defined by a pair of concentric semi-circular severance lines 25 and 26 which are joined together along a diameter by small fold lines 27 and 28. The bottom panel 16 further includes a plurality of transversely spaced and longitudinally aligned extensions 29 which are defined by transversely disposed severance lines 30 which connect the interrupted portions of the fold lines 21 and 22.

The first side panel 17 is connected to the bottom panel 16 along the fold line 21 and is connected to the inner closure panel 19 along an interrupted fold line 31. The first side panel 17 includes a plurality of transversely spaced container engaging members, generally indicated by the numeral 32, which are separated from the bottom panel 16 along the severance line 30 and have a pair of flaps 34 which are foldable along the perforated lines 35 and separated from the first side panel 17 by the severance lines 36. A weakened score line 37 is longitudinally disposed between each pair of flaps 34 such that the container engaging members 32 are sufficiently flexible to snugly embrace the smoothly rounded portion 15 of the containers 12.

The interrupted portions of the transverse fold line 31, which separates the first side panel 17 from the inner closure panel 19, are connected by transversely spaced severance lines 40. The severance lines 40 define chime-receiving openings 41 spaced transversely of the blank 11 for receiving the chime of an adjacent container 12, as shown in FIGURES 1, 2 and 3. A plurality of transversely spaced longitudinally disposed slits 42 are cut into the first side panel 17 and centrally intersect the severance lines 40. The slits 42 allow the first side panel 17 to snugly engage the containers 12.

The second side panel 18 is attached to the bottom panel 16 along the interrupted fold line 22 and is separated from the outer closure panel 20 by the interrupted fold line 45. The second side panel 18 is a mirror image of the first side panel 17 and includes identical container engaging members 32, transversely spaced severance lines

40, which provide for chime-receiving openings 41, and transversely spaced longitudinally disposed slits 42.

The outer closure panel 20 is connected to the second side panel 18 along the interrupted transverse fold line 45 and has a known type of locking flap 46 connected thereto along an interrupted fold line 47. The locking flap 46 includes a plurality of transversely spaced catches 48, which are defined by the transversely disposed severance lines 49 connecting the interrupted portion of the transverse fold lines 47, and also includes a plurality of transversely spaced locking tongues 50 attached along fold lines 51 in longitudinal alignment with the catches 48. A pair of flaps 52 are provided by arcuate severance lines 53 and are attached to the top closure panel 20 along longitudinal fold lines 54 and are bent along the fold line 54 to provide a pair of finger holes 55, as shown in FIGURE 1.

The inner closure panel 19 is attached to the first side panel 17 along the interrupted fold line 31 and has a plurality of transversely spaced extension members 60 defined by the severance lines 40. A plurality of transversely spaced openings 61 are disposed in the inner closure panel 19 for receiving the catches 48 and locking tongues 50, in a manner which is known in the art. A divider member, generally indicated by the numeral 62, is attached to the inner closure panel 19 along an interrupted fold line 63 and is separated into a plurality of transversely spaced spacer members, generally indicated by the numeral 64, by a pair of cut-outs 65. Each of the cut-outs 65 is defined by arcuate severance lines 66 and longitudinal severance lines 67. Each spacer member 64 includes a first side 68 and a second side 69 joined together along a transverse fold line 70. The first side 68, of the divider member 62, is attached to the inner closure panel 19 along the interrupted transverse fold line 63 and the second side 69 is connected to an end flap 71 along an interrupted fold line 72. A chime-receiving opening 73 is provided in the first side 68 by a severance line 74, and a chime-receiving opening 75 is provided in each of the second sides 69 by a severance line 76.

The wrap-around blank 11 is folded along the fold lines 31, 45, 21 and 22 so as to overlap the inner closure panel 19 and the outer closure panel 20 which panels are interlocked by the catches 48 and locking tongues 50 being disposed in the openings 61. As shown in FIGURES 1, 2 and 3, the divider member 62 is disposed betwen a pair of rows of containers 12, each of which have a chime 13 at the top thereof which is disposed within the chime-receiving opening 41 in one of the side panels 17 or 18, and in either the chime-receiving opening 73 or the chime-receiving opening 75 in the divider member 62. The containers 12 are spaced from each other by the separating members 23 which are attached to the bottom panel 16 and are snugly embraced by the container engaging members 32 in the side panels 17 and 18.

As can clearly be seen in FIGURE 2, the interlocked inner and outer closure panels 19 and 20 are wider than the bottom panel 16 such that the first side panel 17 and the second side panel 18 converge inwardly and downwardly toward the bottom panel 16. Thus, the containers 12 are each disposed between a separating member 23 and one of the side panels 17 or 18 such that the side panel is caused to bulge outwardly at the container engaging member 32 so that each of the containers 12 is firmly held in the carrier 10 and can not be inadvertently displaced therefrom.

Each of the flaps 52, which define the finger holes 55, is swingable downwardly into the carrier 10 along the respective fold line 54 so as to lie adjacent the opposite ends of the central spacer member 64 of the divider member 62. A squeezing pressure which is exerted on the flaps 52, along the arrows shown in FIGURE 3, causes the flaps 52 to engage the spacer member 64 which is squeezed between the flaps 52 and prevents tearing of the outer closure panel 20.

The novel carrier can be made of paperboard, plastic, heavy paper or other similar material.

While preferred forms and arrangement of parts have been shown in illustrating the invention, it is to be clearly understood that various changes in details and arrangement of parts may be made without departing from the spirit and scope of the invention as defined in the appended claimed subject matter.

I claim:

1. A carrier for single-chime containers comprising overlapped and interlocked panels including an inner panel and an outer panel; said outer panel having a plurality of transversely spaced locking means attached thereto along an interrupted fold line, and a pair of transversely spaced finger holes in said outer panel; said inner panel having a plurality of transversely spaced openings in longitudinal alignment with and receiving said locking means therein, a center-divider attached to said inner panel along an interrupted fold line, a pair of cut-outs in said center-divider disposed in alignment with said finger holes and separating said center-divider into a plurality of spacer members; each spacer member including a first side and a second side joined together along a transverse fold line, a chime-receiving opening in each said first side and second side for engaging the chimes on adjacent containers, and said first side and second side being disposed to separate the adjacent containers.

2. A carrier for single-chime containers comprising overlapped and interlocked panels including an inner panel and an outer panel; said outer panel having a plurality of transversely spaced locking means attached thereto along an interrupted fold line, and a pair of transversely spaced finger holes in said outer panel; said inner panel having a plurality of transversely spaced openings in longitudinal alignment with and receiving said locking means therein, a center-divider attached to said inner panel along an interrupted fold line, a pair of cut-outs in said center-divider disposed in alignment with said finger holes and separating said center-divider into a plurality of spacer members; each spacer member including a first side and a second side joined together along a transverse fold line, a chime-receiving opening in each said first side and second side for engaging the chimes on adjacent containers, and said first side and second side being disposed to separate the adjacent containers; a bottom panel disposed parallel to said overlapped panels, said bottom panel including a plurality of separating members disposed in transverse alignment with each other and beneath said plurality of spacer members.

3. A carrier for single-chime containers comprising overlapped and interlocked panels including an inner panel and an outer panel; said outer panel having a plurality of transversely spaced locking means attached thereto along an interrupted fold line, and a pair of transversely spaced finger holes in said outer panel; said inner panel having a plurality of transversely spaced openings in longitudinal alignment with and receiving said locking means therein, a center-divider attached to said inner panel along an interrupted fold line, a pair of cut-outs in said center-divider disposed in alignment with said finger holes and separating said center-divider into a plurality of spacer members; each spacer member including a first side and a second side joined together along a transverse fold line, a chime-receiving opening in each said first side and second side for engaging the chimes on adjacent containers, and said first side and second side being disposed to separate the adjacent containers; a pair of side panels, one of said side panels being connected to said inner panel and the other of said side panels being connected to said outer panel, a plurality of chime-receiving openings in each of said side panels disposed in align-

ment with the plurality of chime-receiving openings in said center-divider for cooperative engagement therewith.

4. A carrier for single-chime containers comprising overlapped and interlocked panels including an inner panel and an outer panel; said outer panel having a plurality of transversely spaced locking means attached thereto along an interrupted fold line, and a pair of transversely spaced finger holes in said outer panel; said inner panel having a plurality of transversely spaced openings in longitudinal alignment with and receiving said locking means therein, a center-divider attached to said inner panel along an interrupted fold line, a pair of cut-outs in said center-divider disposed in alignment with said finger holes and separating said center-divider into a plurality of spacer members; each of said finger holes being provided with a flap connected to said outer panel along a respective fold line, said flaps being disposable in said cut-outs for engagement with opposite ends of one of said spacer members.

5. The combination of a carrier and a plurality of containers, each of said containers including a chime at one end thereof and a smooth rounded portion at the other end thereof, said carrier comprising overlapping inner and outer panels, said inner panel including a plurality of spacer members, a pair of chime-receiving openings in each of said spacer members; a pair of cut-outs for spacing said spacer members, a pair of finger holes in said outer panel in alignment with said cut-outs, each of said finger holes being provided with a flap connected to said outer panel, each of said flaps being disposable in one of said pair of cut-outs and being engageable with opposite ends of one of said spacer members.

6. The combination of a carrier and a plurality of containers, each of said containers including a chime at one end thereof and a smooth rounded portion at the other end thereof, said carrier comprising overlapping inner and outer panels, said inner panel including a plurality of spacer members, a pair of chime-receiving openings in each of said spacer members; a pair of cut-outs for spacing said spacer members, a pair of finger holes in said outer panel in alignment with said cut-outs, each of said finger holes being provided with a flap connected to said outer panel, each of said flaps being disposable in one of said pair of cut-outs and being engageable with opposite ends of one of said spacer members; a pair of side panels, one of said panels being connected to said inner panel and the other of said side panels being connected to said outer panel, each of said side panels having chime-receiving openings therein in alignment with the chime-receiving openings in said spacer members.

7. The combination of a carrier and a plurality of containers, each of said containers including a chime at one end thereof and a smooth rounded portion at the other end thereof, said carrier comprising overlapping inner and outer panels, said inner panel including a plurality of spacer members, a pair of chime-receiving openings in each of said spacer members, a pair of cut-outs for spacing said spacer members; a pair of finger holes in said outer panel in alignment with said cut-outs, each of said finger holes being provided with a flap connected to said outer panel, each of said flaps being disposable in one of said pair of cut-outs and being engageable with opposite ends of one of said spacer members; a pair of side panels, one of said panels being connected to said inner panel and the other of said side panels being connected to said outer panel, each of said side panels having chime-receiving openings therein in alignment with the chime-receiving openings in said spacer members; a bottom panel disposed parallel to said overlapped panels, said bottom panel including a plurality of separating members disposed in transverse alignment with each other and beneath said plurality of spacer members.

8. The combination of a carrier and a plurality of containers, each of said containers including a chime at one end thereof and a smooth rounded portion at the other end thereof, said carrier comprising overlapping inner and outer panels, said inner panel including a plurality of spacer members, a pair of chime-receiving openings in each of said spacer members, a pair of cut-outs for spacing said spacer members; a pair of finger holes in said outer panel in alignment with said cut-outs, each of said finger holes being provided with a flap connected to said outer panel, each of said flaps being disposable in one of said pair of cut-outs and being engageable with opposite ends of one of said spacer members; a pair of side panels, one of said panels being connected to said inner panel and the other of said side panels being connected to said outer panel, each of said side panels having chime-receiving openings therein in alignment with the chime-receiving openings in said spacer members; a bottom panel disposed parallel to said overlapped panels, said bottom panel including a plurality of separating members disposed in transverse alignment with each other and beneath said plurality of spacer members; said side panels being connected to said bottom panel along opposite edges thereof and including a plurality of container engaging means conforming to a part of said smooth rounded portion of said containers.

9. A blank for forming a carrier, said blank comprising a wrap-around member, transverse fold lines in said member defining a bottom panel, a pair of side panels and inner and outer closure panels, means for interlocking said closure panels together, a divider member connected to said inner closure panel along a first interrupted transverse fold line and connected to an end flap along a second interrupted transverse fold line, a pair of cut-outs separating said divider member into a plurality of spacer members, each of said spacer members having a pair of severance lines therein connecting the interrupted portions of said first and second transverse fold lines to provide chime-receiving openings therein.

10. A blank for forming a carrier, said blank comprising a wrap-around member, transverse fold lines in said member defining a bottom panel, a pair of side panels and inner and outer closure panels, means for interlocking said closure panels together, a divider member connected to said inner closure panel along a first interrupted transverse fold line and connected to an end flap along a second interrupted transverse fold line, a pair of cut-outs separating said divider member into a plurality of spacer member, each of said spacer members having a pair of severance lines therein connecting the interrupted portions of said first and second transverse fold lines to provide chime-receiving openings therein; a pair of flaps transversely aligned in said outer closure panel and partially severed therefrom to define finger holes therein, said flaps being in longitudinal alignment with said openings in said inner closure panel.

11. A wrap-around blank for a carrier, said blank including an inner closure panel and an outer closure panel, means for interlocking said panels, a divider member connected to said inner closure panel along a first interrupted fold line, a plurality of spaced cut-outs in said divider member for separating said divider member into a plurality of transversely aligned spacer members, a plurality of flaps in said outer closure panel and transversely spaced such that each of said plurality of flaps is in longitudinal alignment with a respective one of said cut-outs which separates said spacer members.

References Cited by the Examiner

UNITED STATES PATENTS

2,899,049	8/59	Grinspoon	206—65
2,922,561	1/60	Currivan	229—40
2,926,782	3/60	Andre	206—65
2,990,997	7/61	Weiss	229—40
3,006,530	10/61	Forrer	206—65
3,111,221	11/63	Chapman et al.	206—65
3,118,537	1/64	Copping	229—40

FRANKLIN T. GARRETT, *Primary Examiner.*