Office de la Propriété Intellectuelle du Canada
Un organisme d'Industrie Canada

Canadian Intellectual Property Office
An agency of Industry Canada

CA 2811463 A1 2012/03/22

(21) 2 811 463

(12) DEMANDE DE BREVET CANADIEN
CANADIAN PATENT APPLICATION

(13) A1

(86) Date de dépôt PCT/PCT Filing Date: 2011/08/23
(87) Date publication PCT/PCT Publication Date: 2012/03/22
(85) Entrée phase nationale/National Entry: 2013/03/15
(86) N° demande PCT/PCT Application No.: EP 2011/004228
(87) N° publication PCT/PCT Publication No.: 2012/034635
(30) Priorité/Priority: 2010/09/18 (DE10 2010 045 979.8)

(51) Cl.Int./Int.Cl. *A47L 9/20* (2006.01), *A47L 5/22* (2006.01), *A47L 9/22* (2006.01), *B01D 46/00* (2006.01)

(71) Demandeur/Applicant:
NILFISK-ADVANCE A/S, DK

(72) Inventeurs/Inventors:
AMISANI, GIANNI, IT;
BONDIOLI, CESARE, IT;
DE FALCO, MAURO, IT

(74) Agent: RIDOUT & MAYBEE LLP

(54) Titre : NETTOYAGE DE FILTRE POUR ASPIRATEUR D'IMPURETES A VENTILATEUR EXTERNE
(54) Title: FILTER CLEANING FOR DIRT SUCTION DEVICES COMPRISING AN EXTERNAL FAN

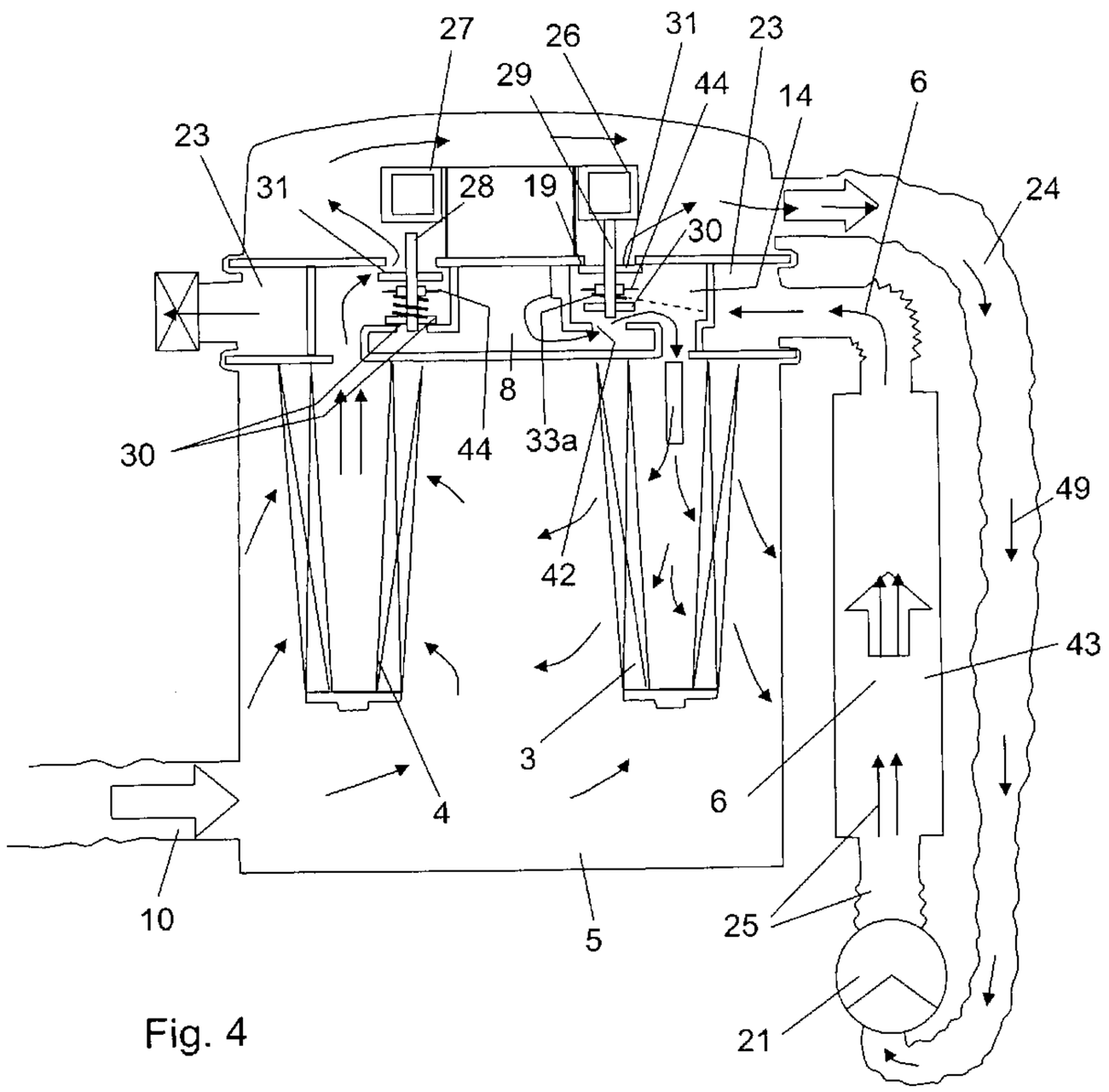

Fig. 4

(57) Abrégé/Abstract:
A dirt suction device comprises at least two filters (3, 4) which are arranged on/in a dirt suction device housing (1), are affected by an air stream from a fan (21), and include valves (26-34) for separately controlling the cleaning action of the filter, wherein during normal operation, the dirt-laden air stream passes through at least one filter from the untreated air side to the clean air side, and at least one of the valves is associated with each of the at least two filters, said valve switching over in the cleaning position such that the air stream in the filter is reversed and the dirt particles adhering to the untreated air side are removed, wherein the fan of the dirt suction device is arranged outside the dirt suction device housing.

(12) NACH DEM VERTRAG ÜBER DIE INTERNATIONALE ZUSAMMENARBEIT AUF DEM GEBIET DES PATENTWESENS (PCT) VERÖFFENTLICHTE INTERNATIONALE ANMELDUNG

(19) Weltorganisation für geistiges Eigentum
Internationales Büro

(43) Internationales Veröffentlichungsdatum
22. März 2012 (22.03.2012)

PCT

(10) Internationale Veröffentlichungsnummer
WO 2012/034635 A1

(51) Internationale Patentklassifikation:
A47L 9/20 (2006.01) *A47L 9/22* (2006.01)
B01D 46/00 (2006.01) *A47L 5/22* (2006.01)

(21) Internationales Aktenzeichen: PCT/EP2011/004228

(22) Internationales Anmeldedatum:
23. August 2011 (23.08.2011)

(25) Einreichungssprache: Deutsch

(26) Veröffentlichungssprache: Deutsch

(30) Angaben zur Priorität:
10 2010 045 979.8
18. September 2010 (18.09.2010) DE

(71) Anmelder *(für alle Bestimmungsstaaten mit Ausnahme von US)*: **NILFISK-ADVANCE A/S** [DK/DK]; Sognevel 25, DK-2605 Broendby (DK).

(72) Erfinder; und

(75) Erfinder/Anmelder *(nur für US)*: **AMISANI, Gianni** [IT/IT]; Via Carpineta, 54, I-40034 Castel d'Alano (BO) (IT). **BONDIOLI, Cesare** [IT/IT]; Via Mauro Tesi,1570, I-41059 Zocca (MO) (IT). **DE FALCO, Mauro** [IT/IT]; Via Circonvallazione Est, 218, I-41054 Marano sul Panaro (MO) (IT).

(74) Anwalt: **RIEBLING, Peter**; Postfach 31 60, 88113 Lindau/B. (DE).

(81) Bestimmungsstaaten *(soweit nicht anders angegeben, für jede verfügbare nationale Schutzrechtsart)*: AE, AG, AL, AM, AO, AT, AU, AZ, BA, BB, BG, BH, BR, BW, BY, BZ, CA, CH, CL, CN, CO, CR, CU, CZ, DE, DK, DM, DO, DZ, EC, EE, EG, ES, FI, GB, GD, GE, GH, GM, GT, HN, HR, HU, ID, IL, IN, IS, JP, KE, KG, KM, KN, KP, KR, KZ, LA, LC, LK, LR, LS, LT, LU, LY, MA, MD, ME, MG, MK, MN, MW, MX, MY, MZ, NA, NG, NI, NO, NZ, OM, PE, PG, PH, PL, PT, QA, RO, RS, RU, SC, SD, SE, SG, SK, SL, SM, ST, SV, SY, TH, TJ, TM, TN, TR, TT, TZ, UA, UG, US, UZ, VC, VN, ZA, ZM, ZW.

(84) Bestimmungsstaaten *(soweit nicht anders angegeben, für jede verfügbare regionale Schutzrechtsart)*: ARIPO (BW, GH, GM, KE, LR, LS, MW, MZ, NA, SD, SL, SZ, TZ, UG, ZM, ZW), eurasisches (AM, AZ, BY, KG, KZ, MD, RU, TJ, TM), europäisches (AL, AT, BE, BG, CH, CY, CZ, DE, DK, EE, ES, FI, FR, GB, GR, HR, HU, IE, IS, IT, LT, LU, LV, MC, MK, MT, NL, NO, PL, PT, RO, RS, SE, SI, SK, SM, TR), OAPI (BF, BJ, CF, CG, CI, CM, GA, GN, GQ, GW, ML, MR, NE, SN, TD, TG).

[Fortsetzung auf der nächsten Seite]

(54) **Title**: FILTER CLEANING FOR DIRT SUCTION DEVICES COMPRISING AN EXTERNAL FAN

(54) **Bezeichnung** : FILTERABREINIGUNG FÜR SCHMUTZSAUGER MIT EXTERNEM GEBLÄSE

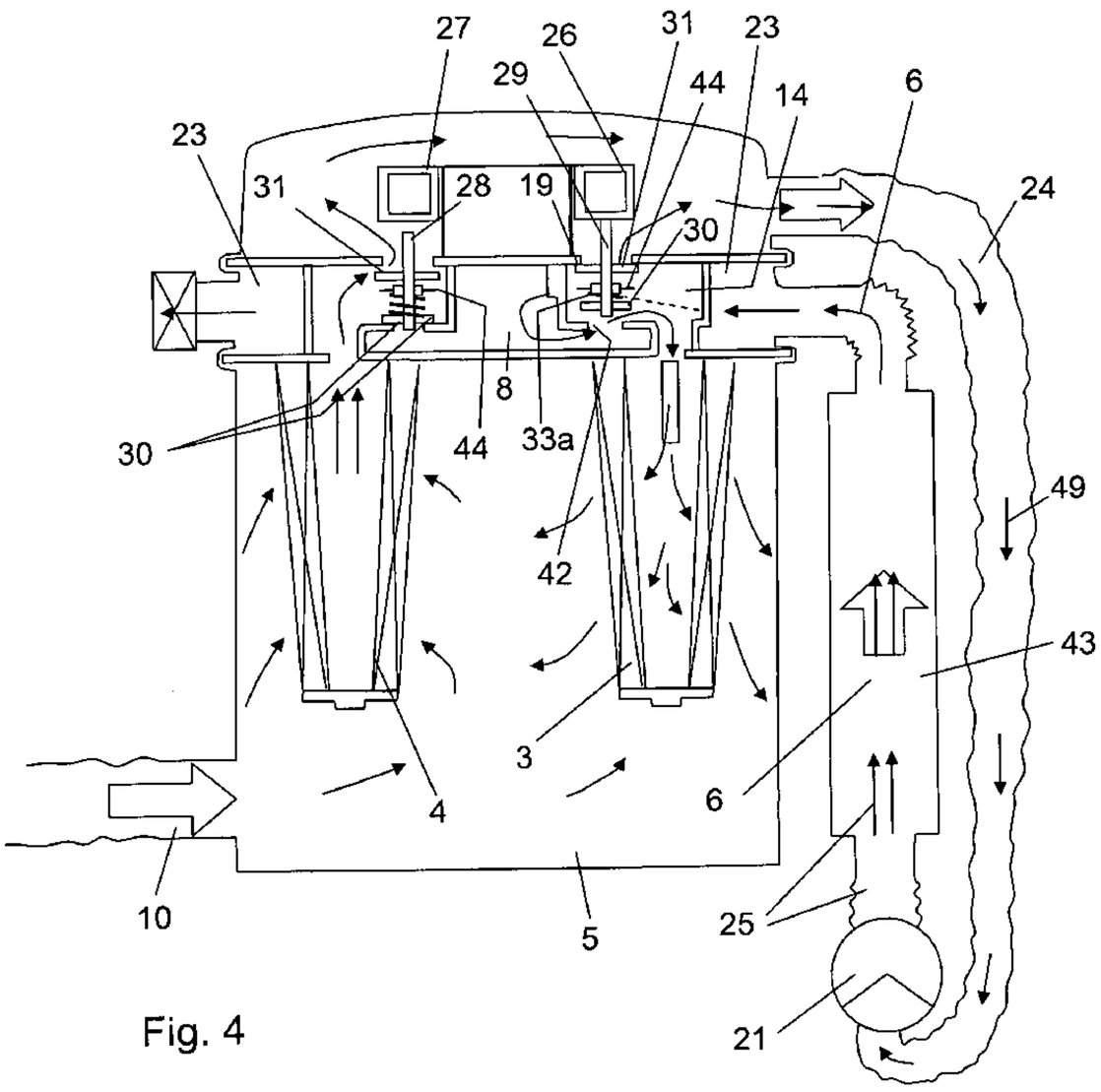

Fig. 4

(57) **Abstract**: A dirt suction device comprises at least two filters (3, 4) which are arranged on/in a dirt suction device housing (1), are affected by an air stream from a fan (21), and include valves (26-34) for separately controlling the cleaning action of the filter, wherein during normal operation, the dirt-laden air stream passes through at least one filter from the untreated air side to the clean air side, and at least one of the valves is associated with each of the at least two filters, said valve switching over in the cleaning position such that the air stream in the filter is reversed and the dirt particles adhering to the untreated air side are removed, wherein the fan of the dirt suction device is arranged outside the dirt suction device housing.

(57) **Zusammenfassung**: Schmutzsauger mit mindestens zwei Filtern (3,4), welche an oder in einem Schmutzsaugergehäuse (1) angeordnet und mit einem Luftstrom eines Gebläses (21) beaufschlagt sind, und welche Ventile (26-34) zur getrennten Steuerung der Abreinigung der Filter aufweisen, wobei im Normalbetrieb mindestens ein Filter von dem schmutzbehafteten Luftstrom von der Rohluftseite zur Reinluftseite durchsetzt ist, und jedem der mindestens zwei Filter mindestens eines der Ventile zugeordnet ist, welches in der Reinigungsstellung umschaltet, wodurch bei dem jeweiligen Filter der Luftstrom umgekehrt wird und nun die an der Rohluftseite anhafteten Schmutzpartikel abreinigt; wobei das Gebläse des Schmutzsaugers außerhalb des Schmutzsaugergehäuses angeordnet ist.

WO 2012/034635 A1

WO 2012/034635 A1

Veröffentlicht:

— *mit internationalem Recherchenbericht (Artikel 21 Absatz 3)*

— *vor Ablauf der für Änderungen der Ansprüche geltenden Frist; Veröffentlichung wird wiederholt, falls Änderungen eingehen (Regel 48 Absatz 2 Buchstabe h)*

FILTER CLEANING FOR DIRT SUCTION DEVICES COMPRISING AN EXTERNAL FAN

The subject matter of the invention is a filter cleaning action for dirt suction devices having an external fan according to the preamble of Claim 1.

A filter cleaning action for dirt suction devices according to the preamble of Claim 1 has been disclosed by the same applicant in the German patent specification DE 101 01 219 B4. The disclosure content of the present invention includes in its entirety the disclosure content of said patent specification. For parts that are equal in both documents the same reference numerals have been used so that with regard to the function and control action in the present invention, reference can be made to the disclosure content of the DE 1010 01 219 B4.

The above-mentioned patent specification provides a single ring filter which is divided into two different filter chambers by a separating web. However, the above-mentioned publication already arranges for the possibility of using that more than one ring filter with a separating web, indicating that two or more filters can be used.

In the above-mentioned publication, the fan is arranged in the housing of the dirt suction device. However, this has the disadvantage of significantly limiting the fan power. Therefore, based on the DE 101 01 219 B4, it is not possible to provide dirt suction devices with considerably higher performances because the fact that the fan is arranged inside the dirt suction device limits the space which, in turn, limits the suction performance.

Furthermore, the dirt suction device described in said patent specification has the disadvantage that it is not possible to operate the dirt suction device when separated from its fan. This resulted in the above-mentioned disadvantage that, on the one hand, the oversized fan does not allow for high suction performances and, on the other hand, such a dirt suction device cannot be used as a pre-filter in stationary fan systems.

An additional disadvantage is the fact that the device has an excessively high noise level because the fan provided with a high-speed motor is arranged directly in the dirt suction container and therefore produces considerable noise generation.

Since in the known patent specification DE 101 01 219 B4 the fan is integrated in the dirt suction device, it is only possible to use so-called ring filters and not individual filter cartridges which are arranged separately in the dirt suction device housing.

Therefore, the well-known system has the disadvantage that basically it is only possible to use a single ring filter which is divided into two different filter chambers by a separating web. It is not possible to use a plurality of different filters, each of which has to be cleaned separately by means of the well-known cleaning control system.

The invention is based on the objective of developing a filter cleaning action for a dirt suction device of the type mentioned above that significantly increases the suction performance and even reduces the installation space for the dirt suction device. Incidentally, it has a lower noise level while offering an improved performance.

To solve the problem, the invention is characterized by the fact that according to the preamble of Claim 1 the dirt suction device can be connected with at least one fan in airtight manner.

The available technical knowledge provides us with the essential advantage that it is now possible to connect one or several fans in airtight manner with the dirt suction device, wherein it is preferable to use a pipe connection between the one or several fans and the dirt suction device. However, the invention is not restricted to using a pipe connection. Instead of using a pipe connection, it is also possible to use other air-conveying connections, for example, pipe joint connections or tight flange connections.

Using at least one fan, which is positioned on the outside of the dirt suction device, has the advantage that the dirt suction device can also be operated apart from the fan. Now it is connected with the dirt suction device only by means of the pipes mentioned above. It is not required to mechanically mount the fan to the housing of the dirt suction device.

On the one hand, this has the advantage of improving its repair friendliness because the dirt suction device and its internal components can be exchanged apart from the fan components. On the other hand, it has the advantage that it is possible to arrange both modules, the dirt suction deice as one module and the fan as a different module, on a mutual carrier in order to provide a dirt suction device with superior suction performance.

Since it is no longer required to mount fan into the installation space of the dirt suction device, it is now possible for the first time to operate a large, powerful fan separate from the dirt suction device and to arrange it, as mentioned, on the carriage. As a result, it is possible for the first time to use fans with electrical connection values, for example, of between 5 kW and 20 kW. By comparison, the dirt suction device described in the DE 101 01 219 B4 was only able to utilize connection values of approximately between 2 and 3 kW.

Arranging the fan of the dirt suction device in the above-mentioned manner has the additional advantage that it is now also possible to use stationary fans, which are securely mounted somewhere in a building, guiding merely the suction and pressure port into the space in which the dirt suction device is to be operated.

This also involves the advantage that a relatively small (without fan) dirt suction device can be connected airtight on the suction side and rear surface, respectively, with an external, stationary fan in order to achieve an extremely high suction performance.

Furthermore, the separation of fan and dirt suction device has the advantage that the arrangement results in a lower noise level because the separately used fans can be separately silenced and arranged on a mutual platform with the dirt suction device in a vibration-damped manner. As a

result, no additional sound-protection measures are required in the dirt suction device except for any exhaust filter or the like that are possible available in the dirt suction device.

The invention has the additional advantage that as a result of reducing the installation space because of lack of a fan it is also possible to relinquish the relatively large ring filter in the dirt suction device and instead use so-called filter cartridges which are arranged in the dirt suction device housing in a number of more than two separately controllable filter cartridges.

For example, 2, 3 or a plurality of separately controllable filter cartridges are arranged in the dirt suction container, wherein the invention-based cleaning control system is controlled in such a way that respectively one or several filter cartridges are in cleaning position while the other filter cartridges are in suction (working) position.

This is a considerable advantage when compared with the prior art described in the DE 101 01 219 B4, because there only a single ring filter is provided, which naturally has only a limited service life. It is considerably more practical to bring a plurality of filter cartridges respectively in suction or cleaning position than a single ring filter.

As a result, such a dirt suction device with any number of more than two filter cartridges arranged on it has a considerably extended service life because the filter cartridges can be separately cleaned and separately exchanged depending on their wear and tear. However, the application should not be limited to filter cartridges. It is also possible to use, for example, flat filters.

Furthermore, the present invention claims an innovative valve control which comprises inventive characteristics that differ from the patent DE 101 01 219 B4.

The "previous" valve control has the advantage of a so-called sequencing control which has been disclosed in the DE 101 01 219 B4.

A sequencing control involves that during the cleaning action first the suction opening of the filter to be cleaned is closed, and only then - when said suction opening of the one filter is closed with a valve – the valve with the cleaning function is opened. In this way it was ensured that the second valve is opened only after the first valve had been closed.

However, in the context of the present invention, a further embodiment is claimed in which the valve control for the one valve is simplified and used independently from the control of the other valve.

While in prior art the valve plate is glidingly connected with the valve rod, the innovative valve control provides that the valve plate is firmly connected with the respective valve rod of the solenoid and kept in spring-loaded manner in closed position by means of a helical compression spring. This is a difference compared with prior art in which the compression spring only has the purpose of allowing a displacement, wherein the closed position takes place through a vacuum effect on the valve plate.

The present invention claims a valve control in which the helical compression spring is required for bringing about the closed position and, as a result, the valve plate is kept in spring-loaded manner in closed position. In order to bring the valve plate in open position, the spring has to be respectively compressed by the solenoid.

The advantage of the invention-based valve construction is the simplicity of the structure because the valve rods no longer require any sliding fits. Only valve plates that are firmly connected with the valve rod are used. As a result, it is required to reverse the suction and pressure side of the entire valve control, which is subsequently described by means of the figures in the drawing.

The subject matter of the present invention is not only included in the subject matter of each individual claim, but can be derived also from a combination of the different claims.

All statements and characteristics disclosed in the document, including the abstract, especially the spatial design displayed in the drawings, are claimed to be important features of the invention, provided they are new individually or in combination when compared with prior art.

Subsequently, the invention is explained in more detail by means of the drawings depicting several methods of execution. At the same time, the drawings and their description disclose further characteristics and advantages essential for the invention.

It is shown:

FIG 1: a cut through a dirt suction device having two filters, wherein both filters are in operating position;

FIG 2: the same cut as shown in FIG 1, wherein the right filter is cleaned;

FIG 3: an embodiment of a dirt suction device having a valve control, which embodiment has been modified compared with FIG 1 and 2, wherein the valve plates of said valve control are firmly connected with the respective valve rod, and wherein both filters are in operating position;

FIG 4: the same display as in FIG 3 with the cleaning position of the right filter;

FIG 5: a diagram of a representation in which a dirt suction device has been arranged separate from the fan;

FIG 6: a top view of an embodiment that has been modified in comparison to the one shown in FIG 5, in which a dirt suction device is operated in parallel mode with two fans;

FIG 7: a cut through a dirt suction device having two filters, wherein both filters are designed as flat filters and are in operating position.

FIG 1 shows a dirt suction device 1 which comprises a container base 5 and which is closed at the top by a housing cover 2.

In the dirt suction device housing 1, there is an arrangement of two separate filters 3, 4 which are designed as filter cartridges. Said filters 3, 4 can be designed as filter cartridges or as separate ring filters.

In the direction of the arrow 11, the dirt-laden suction air is sucked into the interior space of the dirt suction device housing 1 by means of a suction port 10 and flows in the direction of the arrow 11 against the external side of the filters 3, 4. Subsequently, the suction air can also be depicted as untreated air.

In the dirt suction device housing 1, a base 35 has been arranged which is part of the invention-based valve control.

The base 35 is part of a suction chamber 13 in which the valves associated to one another and operating in parallel are arranged.

Since the filters 3, 4 and their valve control are designed equally, it is sufficient to describe merely one side of FIG 1 and 2, because the opposite, mirror-symmetrical side is designed in the exact same manner.

For equal parts equal reference numerals have been used, wherein at times the letter ‘a’ is added when referring to the left or right filter.

FIG shows the operating positing which indicates that the suction air is sucked through the respective filter 3, 4 in the direction of the arrow 12 and appropriately cleaned. Said air reaches an inlet port 14, 15, wherein it should be added that the interior space of the respective filter 3, 4 is described as filter chamber 9 which is connected respectively with the inlet ports 14, 15 in an airtight manner.

The air flows via the valves that are kept in open position in the indicated direction of the arrow into the suction chamber 13, wherein the suction chamber 13 is connected in airtight manner with a circumferential ring chamber 23, into which the air flows, is collected and leaves the inlet opening 20 in the direction of the arrow 49.

The extracted clean air is supplied via a pipe 24 to the suction side of a fan 21 which the air is condensed and blown as compressed air via the exhaust 21into the pipe 25 where the air flows under excess pressure in the direction of the arrow 6 into the excess pressure chamber 8 in the region of the housing cover 2.

There the air is collected, leaves the exhaust filter 7 in the direction of the arrow and flows into the atmosphere.

It is important that the valve control is designed in such a way that at the valve seat 18, 19 the valve plate 31, 31a is first lifted off the valve seat, whereby the corresponding spring 33, 33a is being compressed. This is achieved in that the two solenoids 26, 27 are without current and the corresponding valve rods 28, 29 controlled by the solenoids 26, 27 are kept in open position only by their dead weight and the pressure difference between the intermediate chamber 16, 17 and the suction chamber 13, without the spring 33, 33a being tensioned. Each valve rod 28, 29 has a valve plate 31, 31a that can be moved by means of gasket seals 39. In the position shown in FIG 1, said valve plate 31, is lifted off the valve seat 18, 19.

At the same time, FIG 1 shows that the upper valve plate 30, 30a, which is seated also in such a way that it can be moved on the valve rod 28, 29, in closed position because it is seated on the valve seat 42 in sealing manner.

This closed position occurs only because of the pressure difference between the excess pressure chamber 8 and the suction chamber 13 so that the above-mentioned valve plates 30, 30a, 31, 31a are automatically kept in operating position through the applied vacuum.

The catch plates 32, 32a which are firmly connected with the respective valve rod 28, 29 do not have any function in the position shown in FIG 1.

However, when the right filter is cleaned in the manner shown in FIG 2 while the left filter 4 remains in operating position, the following process takes place:

When the solenoid 26 is activated, the valve rod 29 is lifted, and the lower washer disc 38 compresses the spring 33, whereby the valve plate 31 is pressed against the valve seat 18.

As a result, the inlet port 14 is closed, the vacuum in the inlet port 14 increases, the valve rod 29 moves up in vertical direction, comprises the spring 33, and the catch plate 32 takes the valve plate 30 on its sliding fit up to the valve rod 29. Consequently, the valve seat 42 is opened and cleaning air flows in the direction of the arrow 41 into the inlet port 14. There, the air flows directly into the interior space (filter chamber 9) of the filter 3 where it flows under excess pressure through the filter, blasting off the spraying particles attached to the outside of the filter 3 and transporting them into the interior space of the dirt suction device to be deposited at the bottom of the container 5.

During this process, the left filter 4 is still in operating position, i.e., the air stream corresponds exactly to the way depicted in FIG 1. This means that the cleaning air is discharged also in the direction of the arrow 41 and sucked in by the filter 4, transported via the open valve plate 31a

into the suction chamber 13, from there into the ring chamber 23 and in the direction of the arrow 49 into the suction pipe 24, where it is sucked in by the fan 21 and compressed.

FIG 1 shows that in the operating position a space 37 between the washer disc 34 and the valve plate 31 is set to 0, while in the same situation according to FIG 1 a space exists between the catch plate 32 and the valve seat 42.

In the cleaning position according to FIG 2, it is shown that now the space 37 has a specific magnitude and conversely the space 36 is set to 0.

When switching the depicted valve flaps 30, 31, the cleaning air or clean air immediately enters the cleaning opening 40 and flows in the direction of the arrow 41 through the filter 3.

As a further embodiment, figures 3 and 4 show that it is also possible to exchange the suction side and pressure side of the ports of the fan 21 into the dirt suction device 1, because a different valve flap control is involved.

The valves shown in figures 3 and 4 are connected with tight valve plates 30, 31, each of which is connected with the respective valve rod 28, 29, while in prior art these valve plates are designed to be sliding on the valve rod.

As shown in figures 3 and 4, this measure has the advantage that sliding gaskets and sliding guides can be eliminated. This results in the fact that the air compressed by the fan 21 above the pipe 25 first has to be guided via a silencer 43 into the housing, whereas the excess pressure chamber 8 now has a different design than the one shown in figures 1 and 2.

It is assumed that the valve plate 31 rests against the upper valve seat 19 and this opening is closed.

However, at the moment when the lower valve seat 42 is opened, the upper valve seat 19 is not yet closed. This defines an intermediate position which, however, is harmless for the cleaning action because, shortly afterwards, the one valve seat 19 and the other valve seat 19 are opened and the filter 3 is effectively cleaned.

Figures 3 and 4 show a simple design of the valves.
A further embodiment claims an arrangement of the spring 33 in the upper region of the slide 28 or inside the solenoid valves 26 and 27.

Figures 5 and 6 show an embodiment in which a dirt suction device housing 1 and a separately designed fan 21 are arranged together on a carriage 46.
The carriage 46 comprises wheels 47 to be able to drive.

FIG 5 shows the use of a single fan 21 which is powered in a conventional manner by a motor 45. By way of contrast, FIG 6 shows that it is also possible to operate several fans 21, 21a in parallel manner to one another.

In this case one fan 21 is added to another fan 21a, and both fans 21, 21a, respectively, generate high pressure which is supplied via the pipes 25, 25a to the only dirt suction device housing 1.

It can be observed that in the dirt suction device housing five filters have been arranged. Only filter 3 is depicted because the remaining four filters are designed in identical manner.

Each filter can be controlled with an associated solenoid 26 or 27 and, depending on the control position, one or several filters 3 are kept in operating position and one or several filters in cleaning position.

The suction air sucked from the dirt suction device housing 1 is supplied via a branched pipeline or tubing to the suction side of the respective fan 21a, 21.

FIG 6 shows that the individual solenoids that are arranged circular and evenly distributed around the circumference are fixed at a central attachment 48 of the dirt suction device housing 1.

FIG 7 shows a preferred embodiment of a dirt suction device housing 1 having at least two filters. Said embodiment has the special feature that filters 3, 4 are designed as flat filters which are arranged separately in the dirt suction device housing.

Such flat filters can consist of paper filters, carbon filters, flies made of polyester or the like. However, the invention should not be restricted to these filter embodiments.

Legend of the drawings

1	dirt suction device housing
2	housing cover
3	filter
4	filter
5	container base
6	direction of the arrow
7	exhaust filter
8	excess pressure chamber
9	filter chamber
10	suction port
11	direction of the arrow
12	direction of the arrow
13	suction chamber (connected with 23)
14	inlet port
15	inlet port
16	intermediate chamber
17	intermediate chamber
18	valve seat
19	valve seat
20	inlet opening
21	fan
22	outlet
23	ring chamber (vacuum chamber)
24	pipe
25	pipe
26	solenoid
27	solenoid
28	valve rod
29	valve rod
30	valve plate 30a
31	valve plate 31a

32 catch plate 32a

33 spring 33a

34 supply segment

35 base

36 space

37 space

38 washer disc 38a

39 gasket seal

40 cleaning opening

41 direction of the arrow

42 valve seat

43 silencer

44 limit stop

45 motor

46 carriage

47 wheel

48 attachment

49 direction of the arrow

Claims

1. Dirt suction device having at least two filters (3, 4), which are arranged on/in a dirt suction device housing (1) and which are affected by an air stream from a fan (21) and include valves for separately controlling the cleaning action of the filter (3, 4), wherein during normal operation, the dirt-laden air stream passes through at least one filter (3, 4) from the untreated air side to the clean air side, and at least one of the valves is associated with each of the at least two filters (3, 4), said valve switching over in the cleaning position in such a way that the air stream in the respective filter (3 or 4) is reversed and the dirt particles adhering to the untreated air side are removed, characterized in that at least one fan (21) of the dirt suction device is arranged outside the dirt suction device housing.

2. Dirt suction device according to Claim 1, characterized in that the dirt suction device is connected with at least two external fans (21).

3. Dirt suction device according to any one of claims 1 or 2, characterized in that the dirt suction device housing (1) and the external fan (21) are arranged on a mutual carriage.

4. Dirt suction device according to any one of claims 1 or 3, characterized in that the dirt suction device housing (1) can be connected with a stationary fan (21).

5. Dirt suction device according to any one of claims 1 or 4, characterized in that the filter (3, 4) consists of at least one filter cartridge or at least one flat filter, which can be controlled by means of at least one solenoid (28, 29).

6. Dirt suction device according to any one of claims 1 or 5, characterized in that the individual solenoids (26, 27) that are arranged circular and evenly distributed around the circumference are fixed at a central attachment (48) of the dirt suction device housing (1).

7. Dirt suction device having a valve control for cleaning at least one filter (3, 4), in which during the cleaning action at least one valve situated in the suction opening of the filter to be cleaned is closed, and at least one valve used for cleaning is opened, wherein the valve control comprises at least one solenoid (26, 27), one valve plate (30a, 30b) and one valve rod (28, 29), characterized in that the valve plate (30a, 30b) is firmly connected with the respective valve rod (28, 29) of the respective solenoid (26, 27) and is spring-loaded by a spring (33) in its closed condition.

8. Dirt suction device having a valve control according to Claim 7, characterized in that several filter cartridges or flat filters can be controlled separately from one another by means of the valve control.

9. Dirt suction device having a valve control according to Claim 7, characterized in that the valve control is designed in such a way that at least one solenoid (26, 27) is without current and the corresponding valve rod (28, 29) is kept in open position only by its own dead weight and the pressure differences between the intermediate chamber (16, 17) and the suction chamber (13).

10. A dirt suction device having a valve control according to Claim 7, characterized in that the valve control is designed such that at least one stroke magnet (26, 27) is without current, and the controlled valve rod (28, 29) corresponding thereto is disposed in the open setting solely by means of its own weight and the pressure difference between the intermediate chamber (16, 17) and the suction chamber (13).

Fig. 1

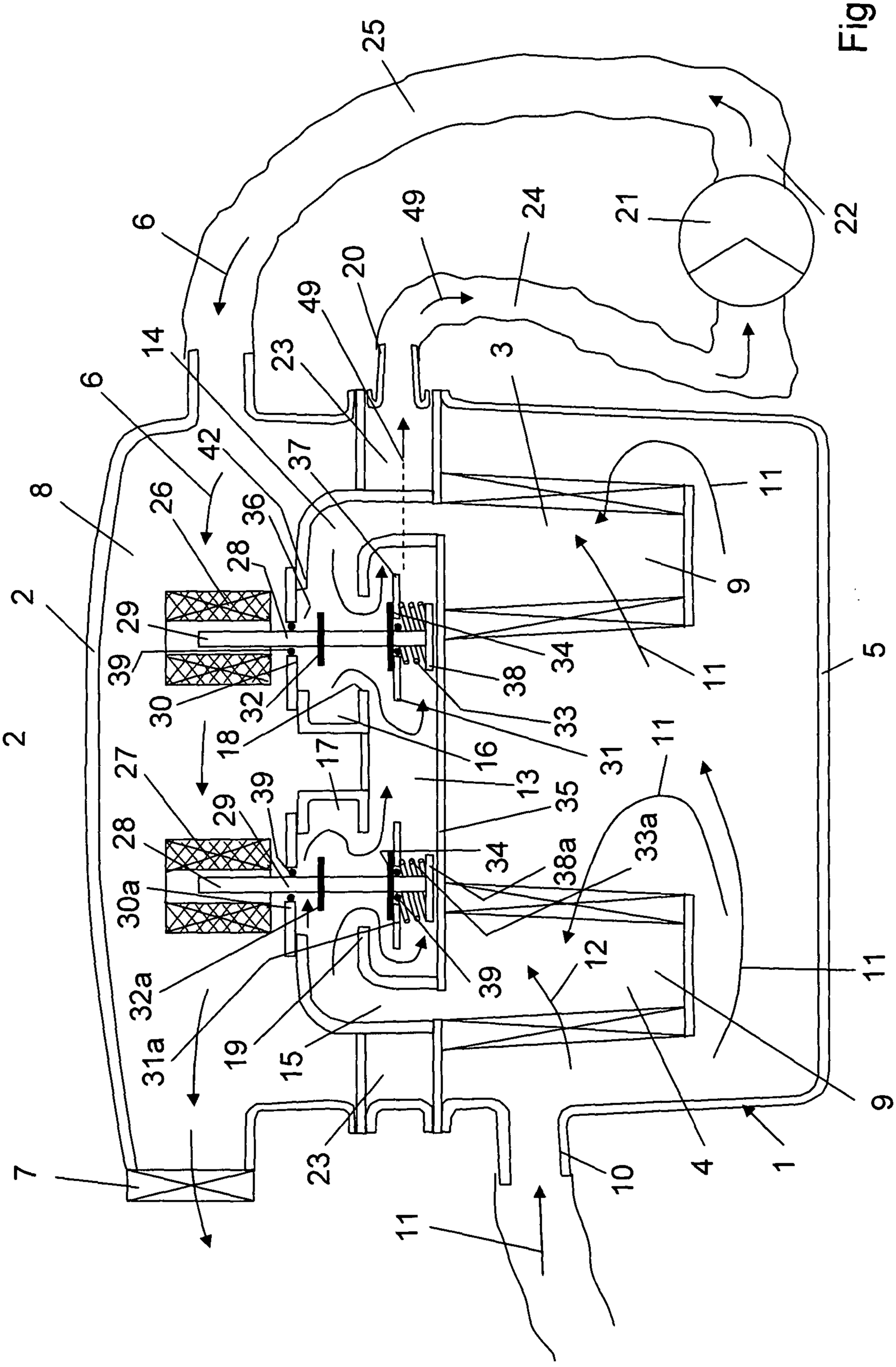
25
6
49
24
21
22
20
49
23
14
3
6
42
37
11
8
26
36
28
9
2
29
4
39
34
38
30
32
11
5
33
18
16
31
17
13
27
39
29
35
11
28
34
33a
38a
30a
12
32a
39
11
31a
19
15
9
3
2
23
10
11
4
1
7

Fig. 2

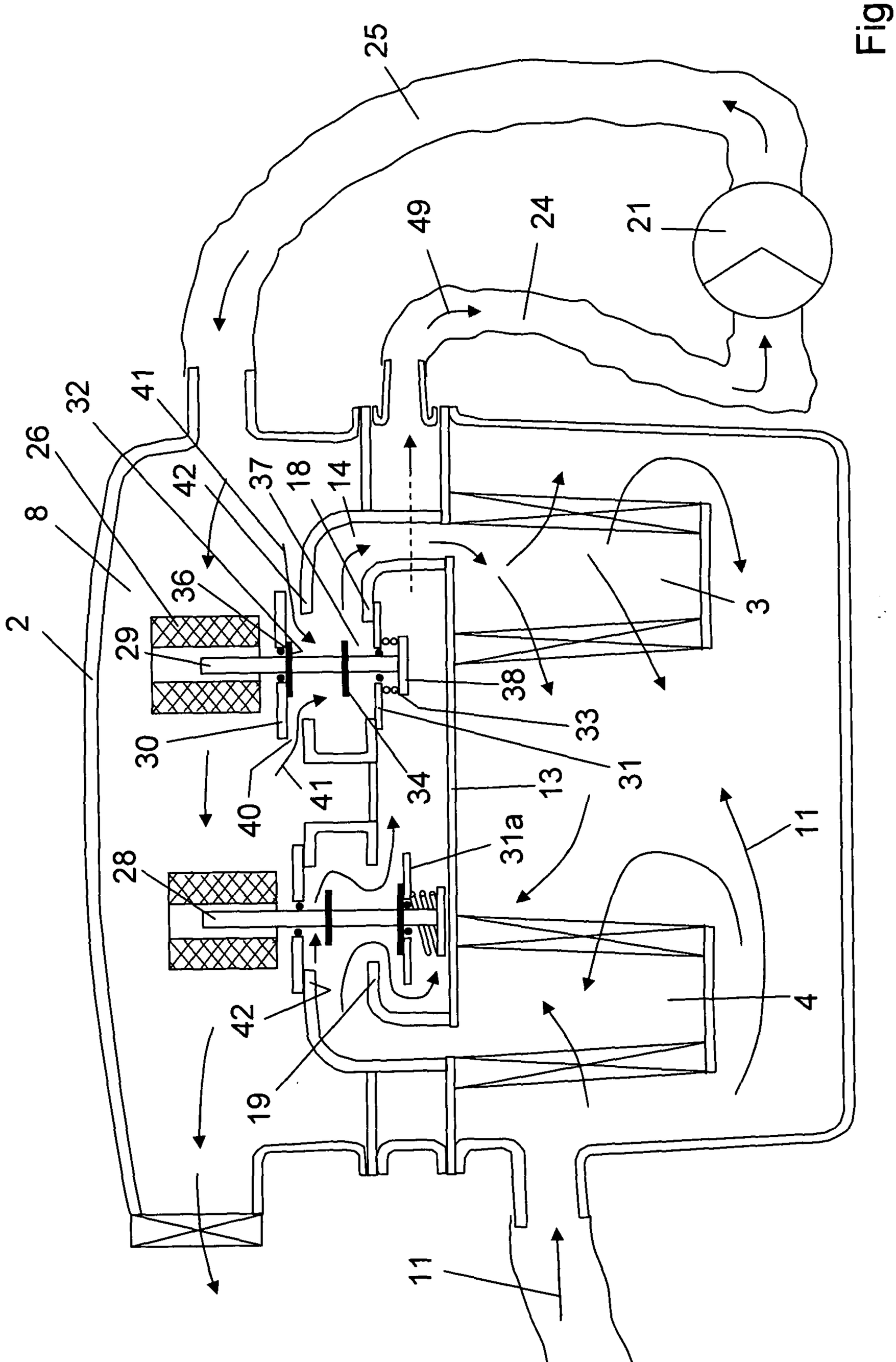
25
49
24
21
41
32
26
42
37
18
14
8
36
2
29
38
3
33
30
31
34
13
40
41
31a
11
28
42
4
19
11

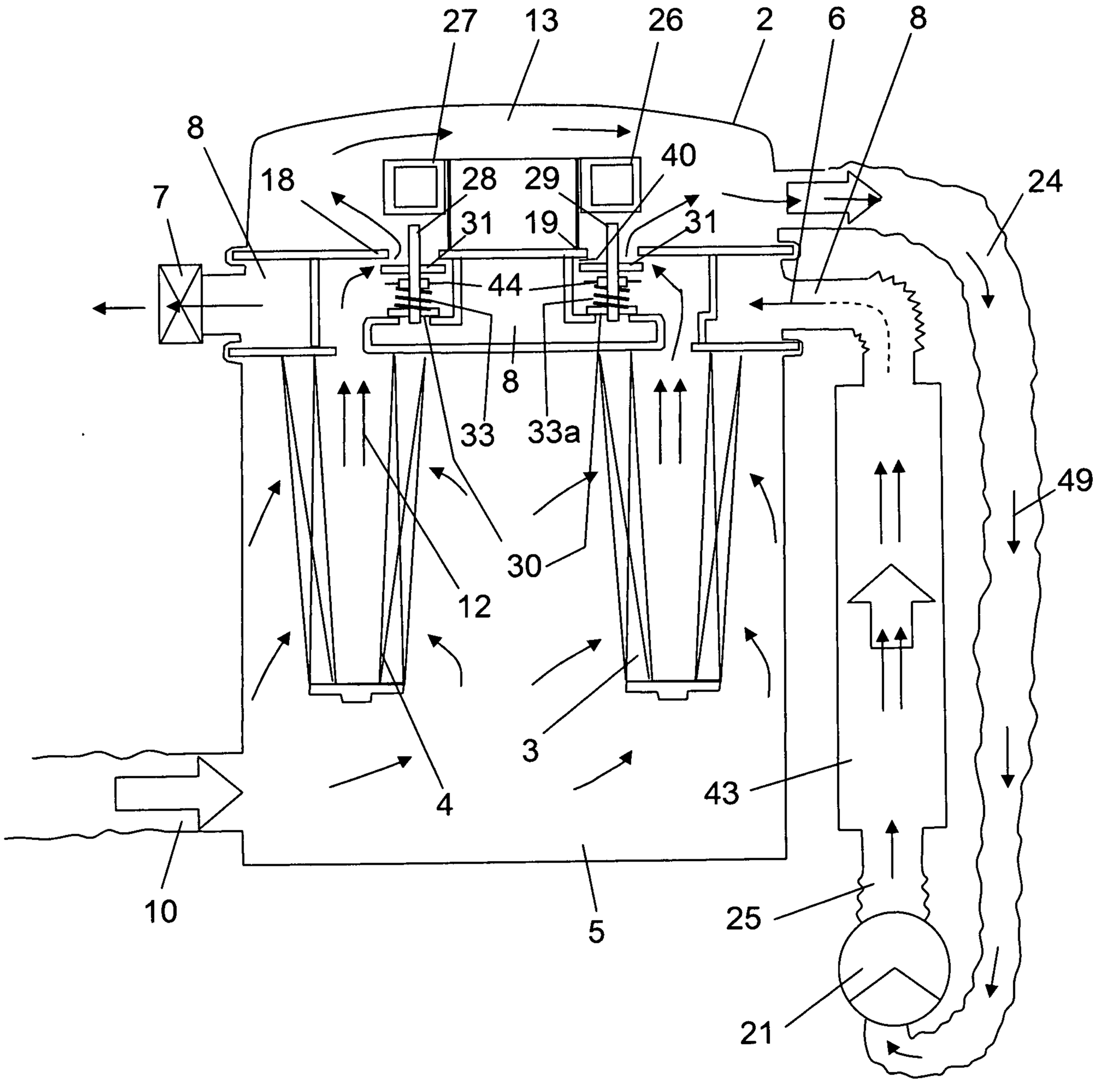
27
13
26
2
6
8
8
18
40
7
28
29
24
31
19
31
44
8
33
33a
49
30
12
3
4
43
10
5
25
21

Fig. 3

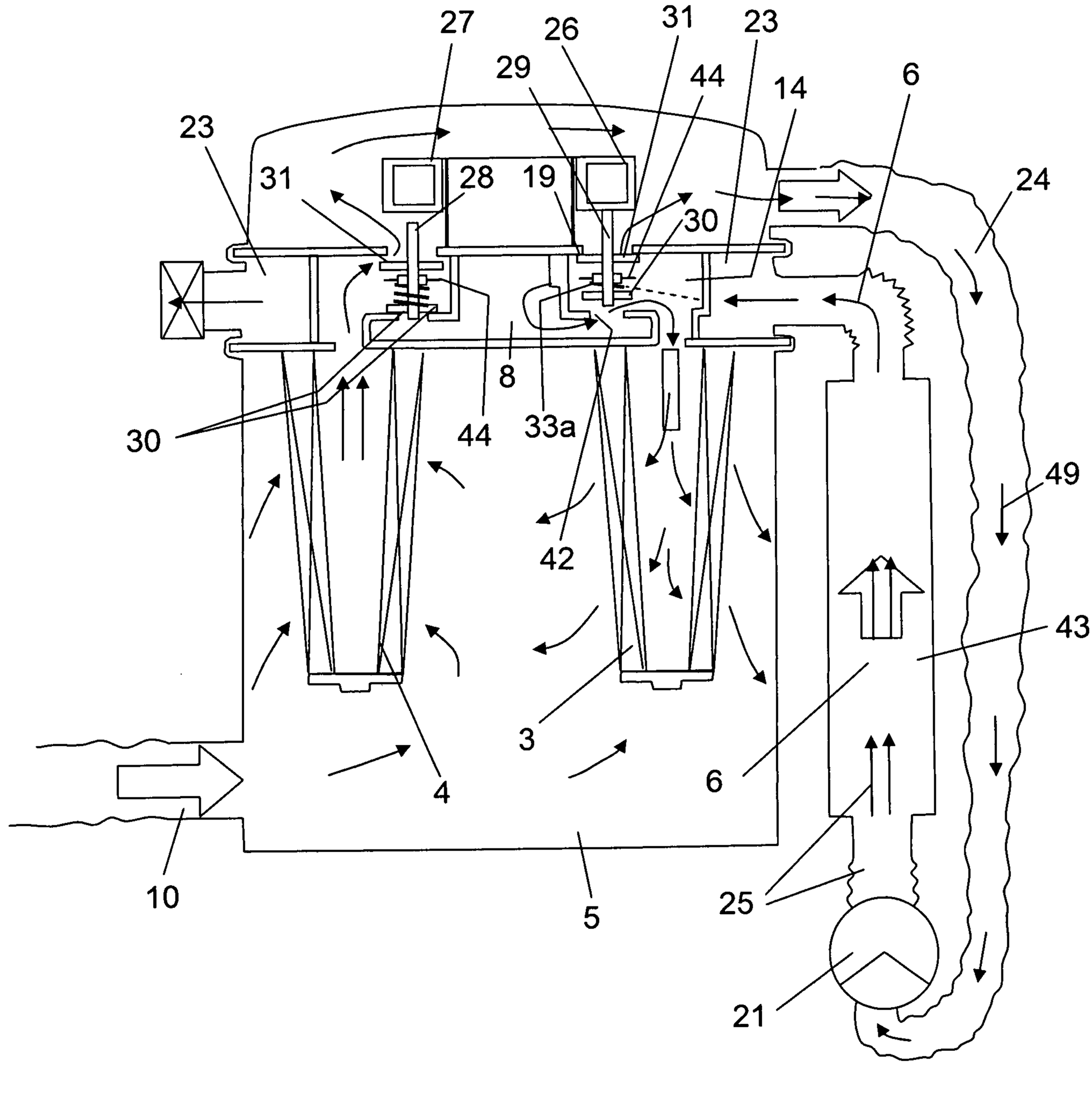
27
26
31
23
29
44
14
6
23
31
28
19
24
30
8
30
44
33a
49
42
43
3
4
6
10
5
25
21

Fig. 4

Fig. 5

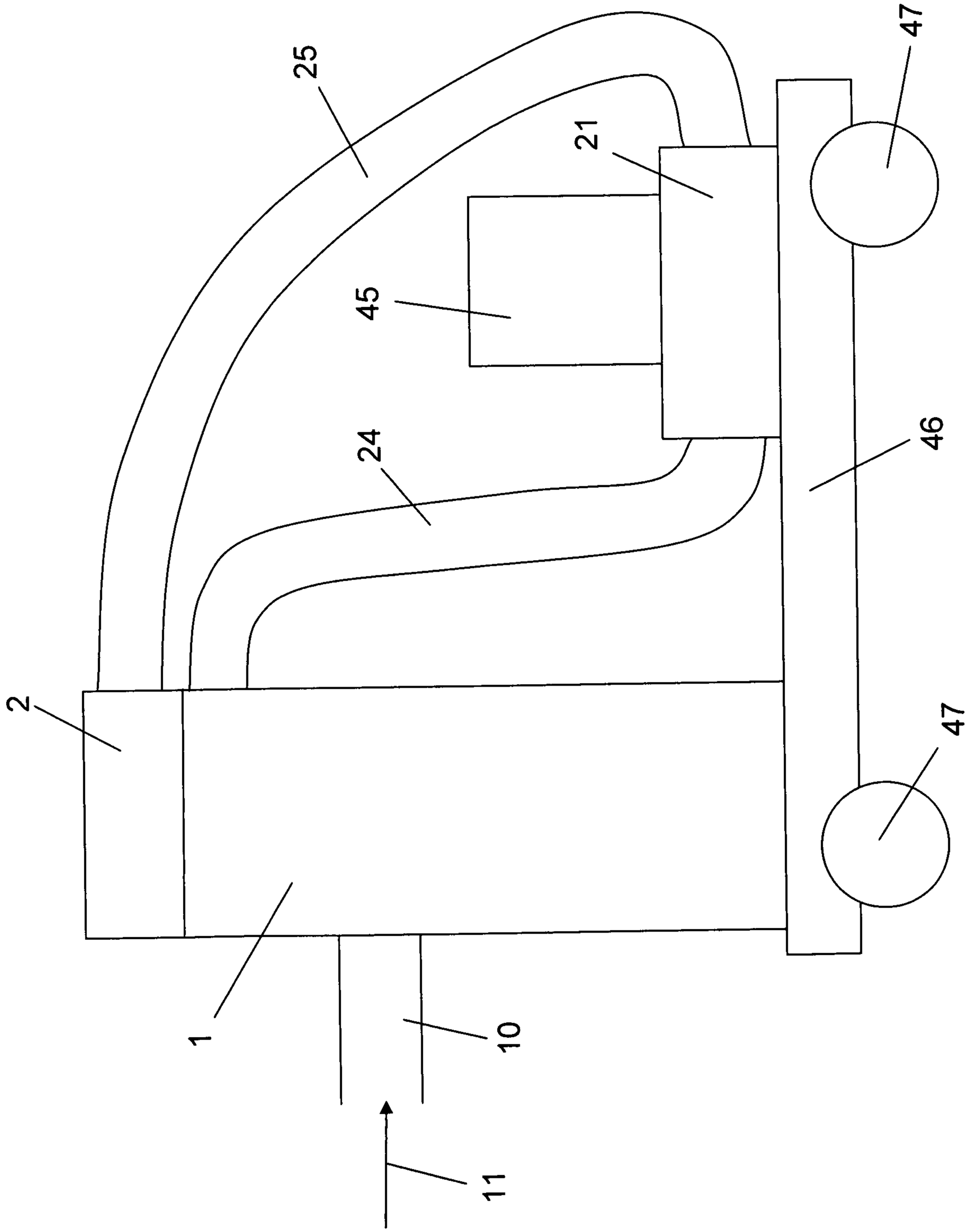

Fig. 6

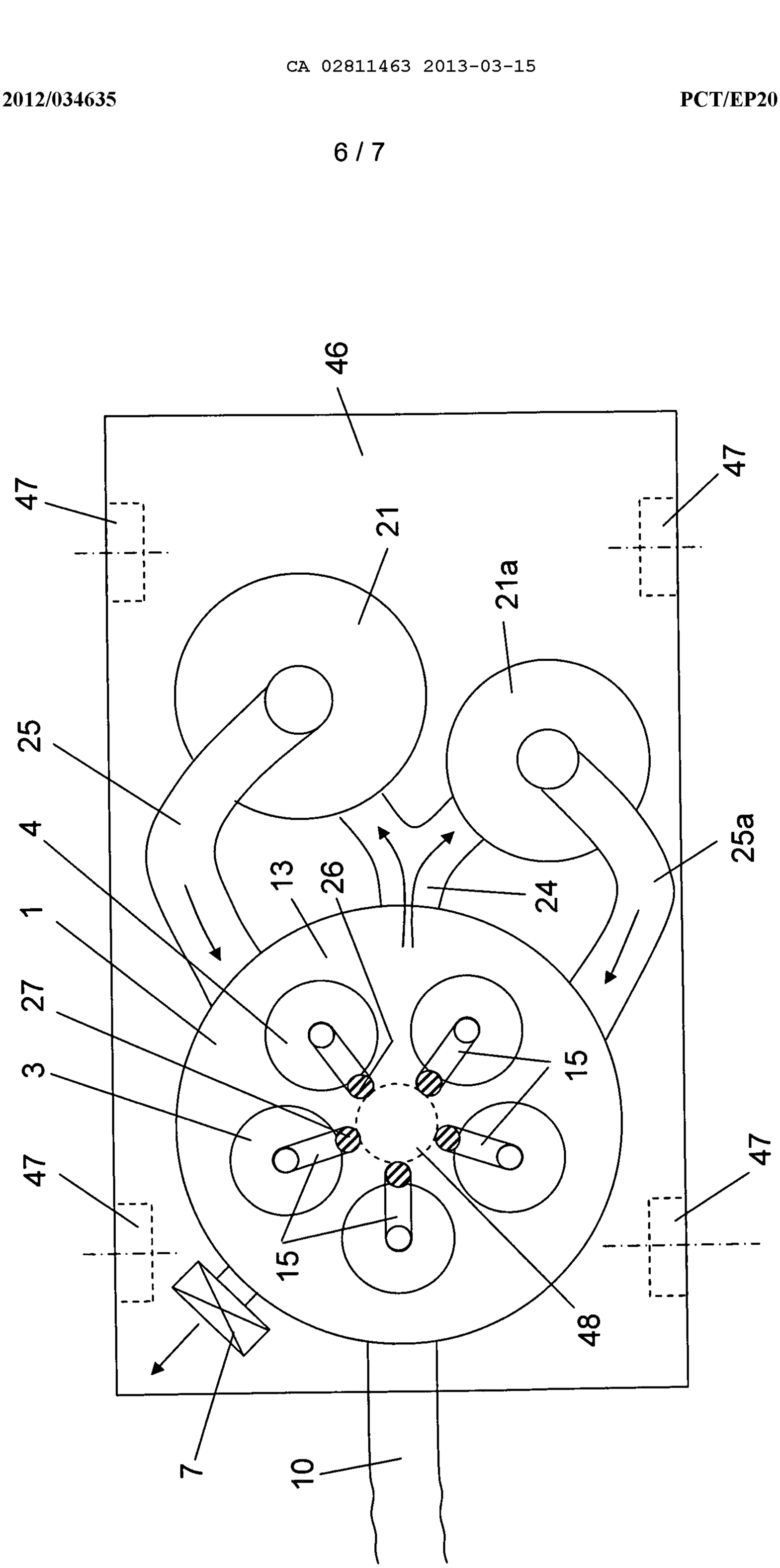

Fig. 7

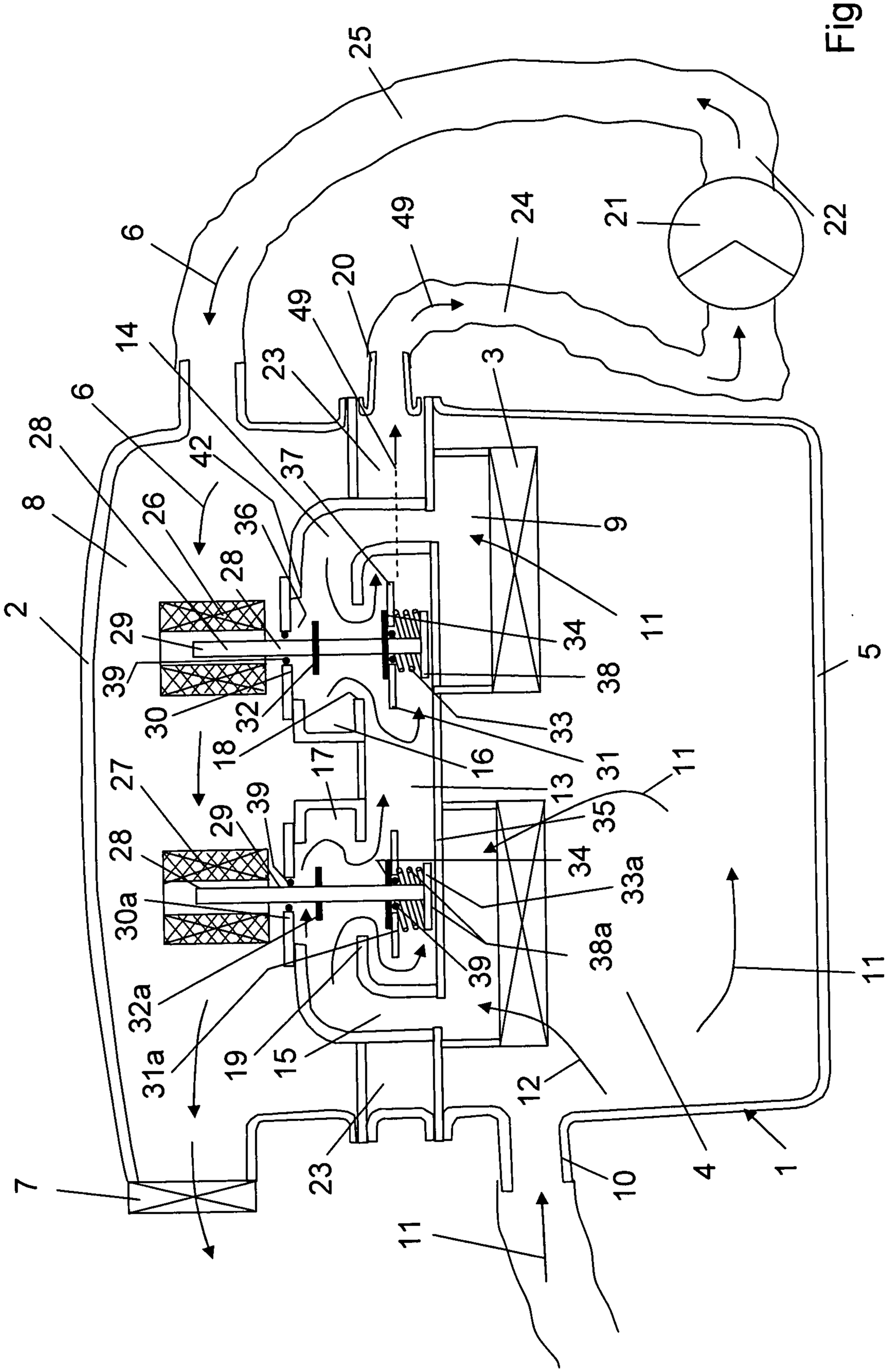
25
6
49
24
21
22
20
49
14
23
3
6
28
42
37
8
26
36
9
28
2
29
34
11
39
38
5
30
32
33
18
16
31
17
13
27
29
39
35
11
28
34
30a
33a
38a
39
11
32a
31a
19
15
12
23
10
11
4
1
7

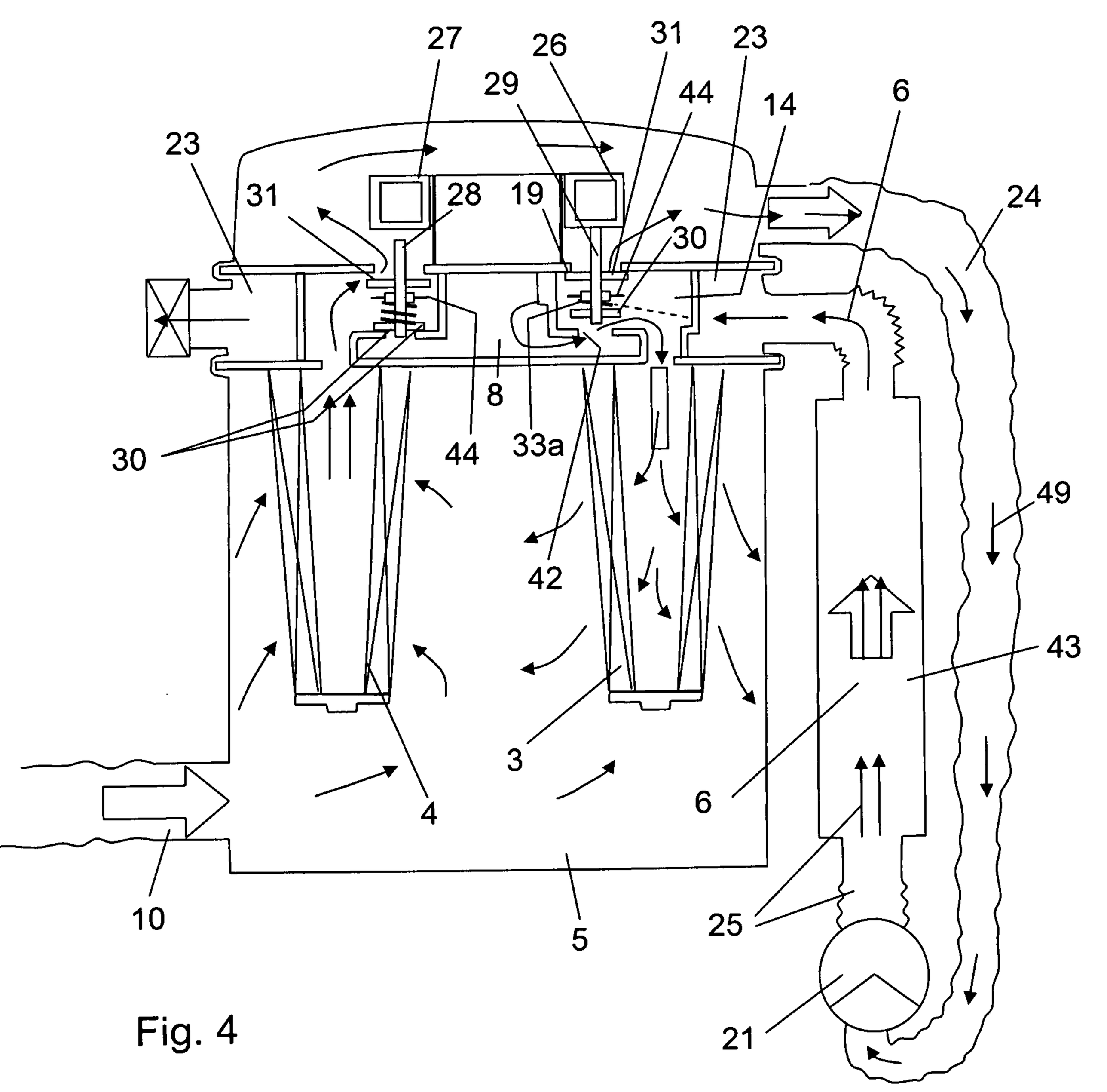
27
26
31
23
29
44
14
6
23
31
28
19
24
30
8
30
44
33a
49
42
43
3
4
6
10
5
25
21

Fig. 4