March 17, 1964 M. L. CRIPE 3,125,001

MULTI-POSITION VACUUM MOTOR

Filed Oct. 2, 1961

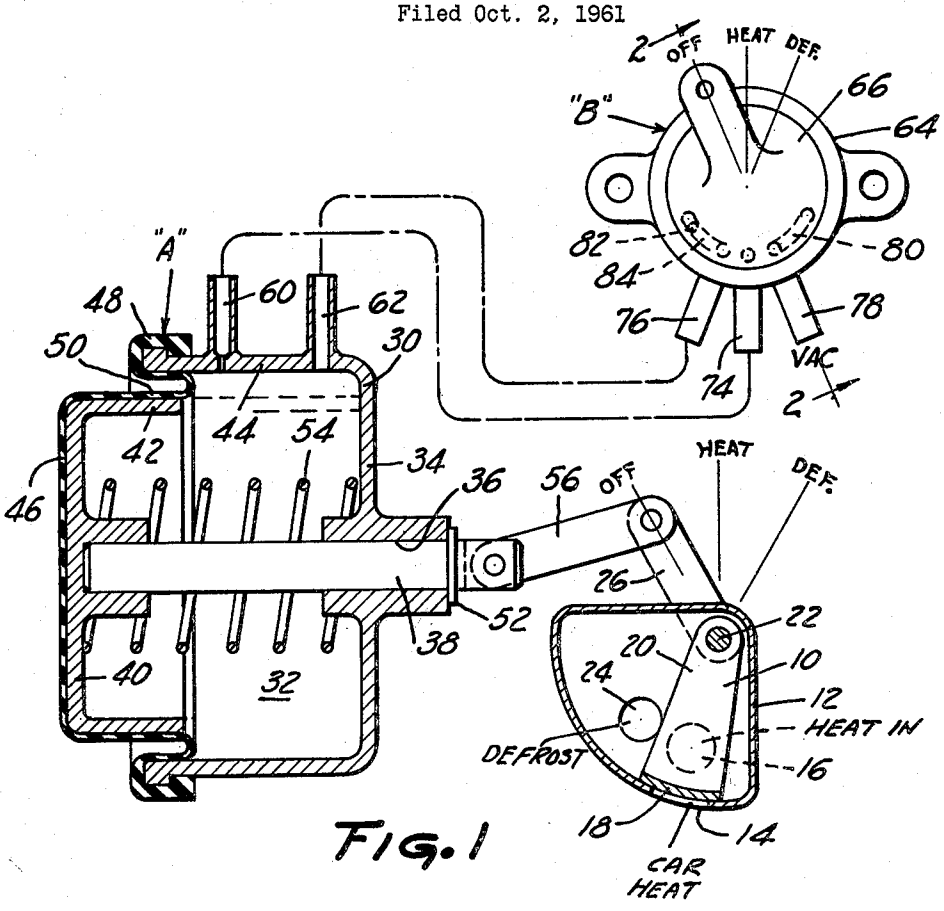

FIG. 1

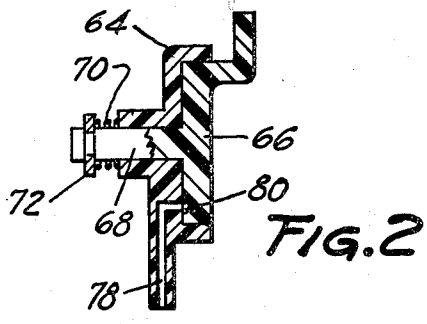

FIG. 2

INVENTOR.
MAXWELL L. CRIPE
BY
William P. Hickey
ATTORNEY

United States Patent Office 3,125,001 Patented Mar. 17, 1964

3,125,001

MULTI-POSITION VACUUM MOTOR

Maxwell L. Cripe, South Bend, Ind., assignor to The Bendix Corporation, South Bend, Ind., a corporation of Delaware

Filed Oct. 2, 1961, Ser. No. 142,194
3 Claims. (Cl. 91—357)

The present invention relates to a multi-position vacuum motor and control system therefor; and more particularly to an inexpensive multi-position vacuum motor having a curtain diaphragm which rolls over a vacuum port to establish one position of the motor.

An object of the present invention is the provision of a new and improved multi-position vacuum motor which is simple in design, rugged in construction and inexpensive to manufacture.

A further object of the present invention is the provision of a new and improved multi-position vacuum motor of the above described type wherein a curtain diaphragm having substantially no frictional hysteresis is used to roll over a vacuum port to both actuate the unit and provide a valving function which establishes an intermediate position of the motor.

The invention resides in certain constructions and combinations and arrangements of parts; and further objects and advantages of the invention will become apparent to those skilled in the art to which it relates from the following description of the preferred embodiment described with reference to the accompanying drawing forming a part of this specification, and in which:

FIGURE 1 is a somewhat schematic view of a vacuum motor control system for actuating the heater control of an automotive vehicle, and in which the vacuum motor is shown in cross section; and

FIGURE 2 is a fragmentary cross sectional view taken approximately on the line 2—2 of FIGURE 1.

The vacuum motor control system shown in FIGURE 1 is depicted as being used to actuate a valving structure 10 in the plenum chamber 12 of an automotive heating system. The plenum chamber 12 is an elongated structure having a cross section that is generally a sector of a circle. A heat outlet port 14 is located across the bottom curved section of the plenum chamber; and heated air is fed into the plenum chamber through a circular inlet 16 in one endwall of the plenum chamber 12. Valve structure 10 has a circular end portion 18 adapted to slide over and close off the outlet port 14, and an end actuating arm portion 20 which overlies the inlet 16 in the endwall of the plenum chamber and is fastened to an actuating shaft 22. The valving structure 10 is shown in its "Off" position wherein heat is prevented from entering the plenum chamber 12.

The heater control shown is also provided with a defrosting connection 24 in its endwall adjacent the heat inlet 16. The defrosting connection 24 is located to the side of the normal position of the valving structure 10 shown in the drawing and is adapted to be closed off by the end arm 20 as the valving structure is moved from the "Off" position shown to a "Car Heat" position wherein the circular portion 18 is open with respect to the outlet port 14. The position just described wherein the car heat port is open, and the defroster port is closed forms the "First Actuated" position of the valving structure 10. Valving structure 10 is adapted to be moved into still a "Second Actuated" position spaced clockwise from the "First Actuated" position above described, and wherein both the defrosting connection 24 and the heat outlet port 14 are opened. The shaft 22 is rotated by means of an arm 26, and the "Normal," "First Actuated," and "Second Actuated" position of the arm 26 are indicated in the drawings by "Off," "Car Heat" and "DEF," respectively.

The arm 26 is adapted to be moved into each of its three positions by means of a vacuum motor A which in turn is controlled by means remotely located valve structure B. The vacuum motor A generally comprises a cup-shaped housing 30 having a generally axially extending internal chamber 32 which communicates with the open end of the cup-shaped housing 30. The closed or bottom endwall 34 is provided with an axially extending opening 36 therethrough through which a shaft 38 is sealingly guided for reciprocatory motion. The inner end of the shaft 38 is suitably fastened to a cup-shaped movable wall 40 whose sidewalls 42 project into the internal chamber 32 and have a generally predetermined clearance with respect to the sidewalls 44 of the chamber 32. The internal chamber 32 is closed off by means of a diaphragm 46, the center portion of which overlies the movable wall 40 and the outer portion of which is sealingly snapped over the radial flange 48 of the housing member 30 adjacent its open end. The diaphragm 46 is provided with an annular curtain portion 50 having a generally U-shaped cross section, the sides of which lay up against the sidewalls 42 and 44 respectively. Inward movement of the movable wall 40 therefore causes one leg of the curtain portion of the diaphragm 50 to roll out of engagement with the sidewalls 42 and into engagement with the sidewalls 44 of the internal chamber 32. The shaft 38 is provided with an annular abutment washer 52 suitably affixed to its outer end; and the abutment washer 52 is normally biased into engagement with the end surface of the housing 30 by means of a piston return spring 54 interpositioned between the movable wall 40 and the inner endwall 34 of the housing member. Reciprocatory motion of the shaft 38 is transmitted to the arm 26 of the heater control structure by means of a drag link 56, the ends of which are suitably pivoted to shaft 38 and arm 26 respectively.

The power actuated elements 40 and 46 of the vacuum motor A are caused to move into a "First Actuated" position corresponding to the "Car Heat" position of the lever 26 indicated in the drawing, and to a "Second Actuated" position corresponding to the "Defrost" position of the lever 26 indicated in the drawing, by admitting vacuum into the internal chamber 32 of the vacuum motor A. According to principles of the present invention, the "First Actuated" position of the vacuum motor A is established by communicating vacuum to the internal chamber 32 through a vacuum connection 60 that is so located in the sidewalls 44 of the housing 30 as to be covered up by the rolling action of the diaphragm 50 at the position corresponding to the "Car Heat" position of the actuating arm 26. Inasmuch as a valving action and not a positive stopping arrangement is used to establish the "First Actuated" position of the vacuum motor A, it will be seen that inertia forces, frictional hysteresis forces, etc., could cause the "First Actuated" position which is assumed by the motor to vary appreciably. The overall design of the vacuum motor A shown in FIGURE 1 of the drawings is such that: the curtain diaphragm produces substantially no frictional hysteresis, the movable elements have very little inertia by reason of their light weight and short stroke; and the motor utilizes a piston return spring 54 having an appreciable spring rate which requires increasing pressure forces to be used to move the movable wall 40 throughout its stroke. The sliding fit or seal between the shaft 38 and its receiving bore 36 allows a slight seepage of air into the internal chamber 32, so that if any overshooting of the "First Actuated" position occurs, the movable wall 40 will move outwardly to the position where the diaphragm 50 just closes off the vacuum inlet port 60. It will further be

seen that the closing off of the vacuum inlet 60 by the diaphragm 46 occurs through a rolling action of the diaphragm so that no ripping or tearing of the surface of the diaphragm occurs due to a rubbing or sliding action over the opening of the vacuum inlet 60, as occurs in a sliding type of seal.

The "Second Actuated" position of the servomotor is established by suitable abutment means, as for example the end of the sidewalls 42 moving in engagement with the bottom end wall 34 of the housing, which limits the travel of the shaft 38 at the time that the arm 26 is in the exact "Defrost" position shown in the drawing. The movable elements 40 and 46 are caused to move from the "First Actuated" position to the "Second Actuated" position by admitting vacuum into the internal chamber 32 through a second vacuum inlet connection 62 which is not valved off in any manner by the motor, so as to positively maintain abutment of the end of the sidewalls 42 with the endwalls 34 of the vacuum motor A. It will therefore be seen that the movable elements of the vacuum motor A are caused to assume "First" and "Second" actuated positions which are accurately located, and adjusted to, without the use of valving structure provided expressly for that purpose.

Control of the vacuum motor A is had by a remotely located valve structure B which selectively communicates vacuum to the vacuum inlet ports 60 and 62 of the motor A. The remotely located valve structure B may be of any suitable type, and as shown in the drawing is formed by a rotary valve arrangement having a cup-shaped body 64 into which a rotary slide 66 is sealingly fitted. The rotary slide 66 is provided with a shaft 68 which extends through the bottom of the cup-shaped body 64, and which is held in place by means of a spring 70 interpositioned between the bottom of the cup and a snap ring 72 on the projecting end of the shaft 68. The bottom surface of the slide 66, and the internal surface of the cup-shaped body 64 form a valve porting arrangement which selectively communicates vacuum to a first outlet connection 74 communicating with the vacuum connection 60 of the motor A, and a second outlet connection 76 communicating with the second vacuum inlet 62 of the motor A. The vacuum connection 78, and the vacuum outlets 74 and 76 are formed as part of the valve body 64 and have portings therein which communicate with the internal surface of the body 64 at generally equi-spaced intervals. The inner surface of the slide 66 is provided with an arcuate groove 80 of sufficient length as to be capable of extending over all of the ports of the connections 78, 74 and 76. In the normal "Off" position of the valve, the groove 80 is positioned so that it only overlies the vacuum inlet port 78. The slide can then be rotated to a "Car Heat" position wherein the groove 80 overlies the ports of the vacuum inlet and actuating ports 78 and 74 and has a "Defrosting" position wherein the groove 80 overlies the ports of all of the connections 78, 74 and 76. When the slide 66 is moved into the "Car Heat" position, vacuum from the connection 78 is only communicated to the outlet 74 of the valve body so that vacuum only enters the internal chamber 32 of the vacuum motor A through the vacuum inlet connection 60. This draws the movable elements 40 and 46 inwardly to its "First Actuated" position wherein the diaphragm 50 just closes off the inlet connection 60, and proceeds no further as previously explained—by reason of the very low friction and inertia, and the slight seepage of air between the shaft 38 and receiving bore 36. When the slide 66 is moved into its "Defrost" position, vacuum is also communicated to the inlet port 62 to draw the movable wall 40 down into engagement with the bottom endwall 34 of the housing 32, and thereafter hold it in abutment therewith.

The internal surface of the cup-shaped body 64 may also be provided with an atmospheric port 82, and a groove 84, in the inner surface of the slide 66 to communicate atmospheric pressure to the port 76 when the slide 66 is in the "Off" position shown in the drawing. With this arrangement, a quick passage of air proceeds to the internal chamber 32 of the vacuum motor A when the slide 66 is moved to the "Off" position to permit the piston return spring 54 to snap the movable wall 40 and shaft 38 back to its normal position, wherein the annular abutment washer 52 engages the end wall of the servomotor, and the arm 26 is positioned in its "Off" position.

It will be apparent that the objects heretofore enumerated as well as others have been accomplished; and that there has been provided an overall design of a multi-position vacuum motor which is extremely simple and inexpensive to manufacture and which will accurately position itself into an intermediate position by the rolling action of its power diaphragm over a vacuum inlet port.

While the invention has been described in considerable detail, I do not wish to be limited to the particular construction shown and described; and it is my intention to cover hereby all novel adaptations, modifications and arrangements thereof which come within the practice of those skilled in the art to which the invention relates.

I claim:

1. In a vacuum motor control system: a housing having an internal chamber, a movable wall in said internal chamber, the sides of said movable wall having a predetermined clearance with respect to the sidewalls of said chamber, a curtain diaphragm overlying said movable wall with a rolling U-shaped portion extending into said predetermined clearance to roll between the sidewalls of said chamber and the surface of said movable wall during movement of said movable wall, said curtain diaphragm having its outer edge sealingly fixed to the sidewalls of said housing, a driven shaft operatively connected to said movable wall, means biasing said movable wall to a normal position adjacent the open end of said internal chamber, a first vacuum connection in the sidewalls of said internal chamber spaced inwardly of the normal position of said diaphragm and rolled over and sealed off by said diaphragm during inward movement of said movable wall from said normal position to provide a first actuated position of said driven shaft, which sealing is maintained throughout any further inward movement of said movable wall, abutment means limiting inward movement of said movable wall to a second actuated position wherein said movable wall is spaced inwardly from said first actuated position, a second vacuum connection to said internal chamber and not closed off by said diaphragm to cause said movable wall to engage said abutment and provide a second actuated position of said shaft, and a valve means for selectively applying vacuum to respective first and second vacuum connections.

2. In a vacuum motor control system: a cup-shaped housing having a generally closed bottom end wall and an internal chamber opening outwardly of the open end of said cup-shaped housing, a movable wall in said internal chamber, the sides of said movable wall having a predetermined clearance with respect to the sidewalls of said chamber, a curtain diaphragm overlying said movable wall with a rolling U-shaped portion extending into said predetermined clearance to roll between the sidewalls of said chamber and the surface of said movable wall during movement of said movable wall and its outer edge sealingly fixed to the sidewalls of said housing, a driven shaft extending through said end wall of said housing and abutted by said movable wall, means biasing said movable wall to a normal position adjacent the open end of said internal chamber, a first vacuum connection in the sidewalls of said internal chamber spaced inwardly of the normal position of said diaphragm and rolled over and sealed off by said diaphragm during inward movement of said movable wall from said normal position to provide a first actuated position of said driven shaft, which sealing of said first vacuum connection is maintained throughout any further inward movement of said movable wall, abutment means limiting inward movement of said movable

wall to a second actuated position wherein said movable wall is spaced inwardly from said first actuated position, a second vacuum connection to said internal chamber and not closed off by said diaphragm to cause said movable wall to engage said abutment and provide a second actuated position of said shaft, and valve means for selectively applying vacuum to respective first and second vacuum connections.

3. In a vacuum motor control system: a housing having an internal chamber; a movable wall in said internal chamber; a driven shaft operatively connected to said movable wall; a first vacuum connection to said internal chamber; a second vacuum connection to said internal chamber spaced from said first vacuum connection; a valve means for selectively applying vacuum to respective first and second vacuum connections; and a diaphragm means operatively connected to said movable wall and

said housing, said diaphragm means being adapted to close said first vacuum connection as said movable wall is moved to a position where said diaphragm rolls off said movable wall onto the chamber walls to keep said first vacuum connection closed whenever said movable wall is underlying and beyond said first vacuum connection towards said second vacuum connection.

References Cited in the file of this patent

UNITED STATES PATENTS

1,809,491	Rowell	June 9, 1931
1,952,806	Hyland	Mar. 27, 1934
2,465,714	Elliott	Mar. 29, 1949
2,895,455	Clowes	July 21, 1959
2,986,125	Young et al.	May 30, 1961