A. C. CORSE.

Base-Burning Stove.

No. 129,534. Patented July 16, 1872.

Fig. 1.

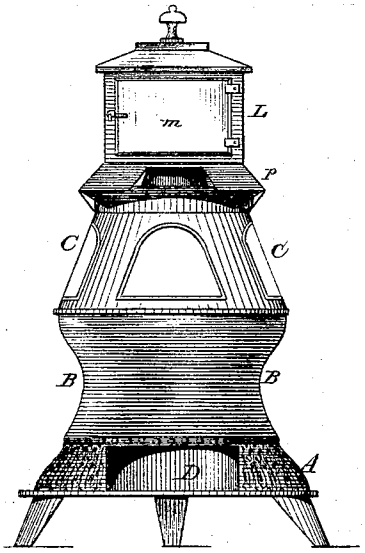

Fig. 2.

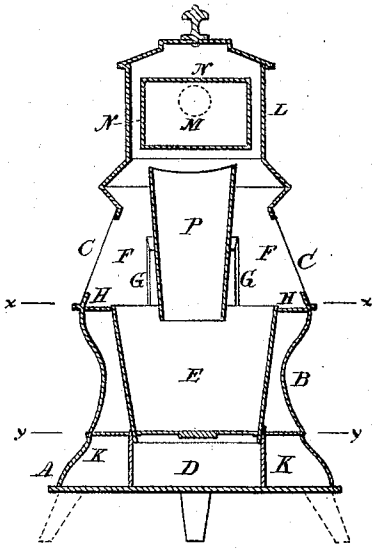

Fig. 3.

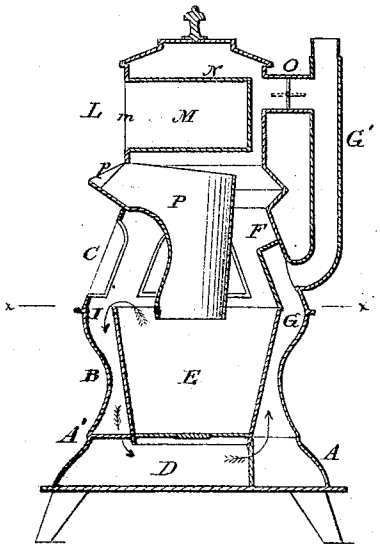

Fig 4.

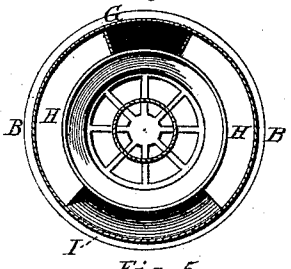

Fig. 5.

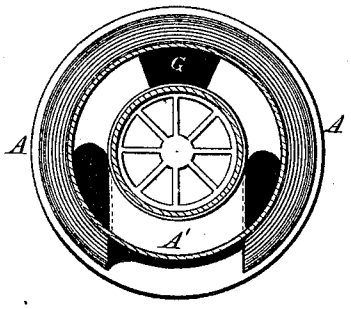

Witnesses.

C. A. Poole.
John R. Young

Inventor,

A. C. Corse, by
Arnold and K. his
attys.

AM. PHOTO-LITHOGRAPHIC CO. N.Y. (OSBORNE'S PROCESS.)

UNITED STATES PATENT OFFICE.

ALBERT C. CORSE, OF TROY, NEW YORK, ASSIGNOR TO EDDY, CORSE & CO., OF SAME PLACE.

IMPROVEMENT IN BASE-BURNING STOVES.

Specification forming part of Letters Patent No. 129,534, dated July 16, 1872.

To all whom it may concern:

Be it known that I, ALBERT C. CORSE, of Troy, in the county of Rensselaer and in the State of New York, have invented certain new and useful Improvements in Heating-Stoves; and do hereby declare that the following is a full, clear, and exact description thereof, reference being had to the accompanying drawing making part of this specification, in which—

Figure 1 is a front elevation of my improved stove. Fig. 2 is a vertical central section of the same on a line extending from side to side. Fig. 3 is a like view of the same on a line extending from front to rear. Fig. 4 is a horizontal section of said stove on line *x x* of Figs. 1, 2, and 3; and Fig. 5 is a like view on line *y y* of same figures.

Letters of like name and kind refer to like parts in each of the figures.

The object of this invention is to increase the symmetry and compactness of a stove, and also to increase its draught; and it consists, principally, in the arrangement of the back or ascending flue within the casing of the lower or fire-pot section, substantially as and for the purpose hereinafter specified. It consists, further, in the construction and relative arrangement of the parts composing the lower or fire-pot section, substantially as and for the purpose hereinafter shown. It consists, further, in a diving-flue situated wholly in front of the fire-pot, substantially as and for the purpose set forth.

In the annexed drawing, A represents the base, B the lower section, and C the mica section of a stove containing an ash-pit, D, fire-pot E, and combustion-chamber F, arranged in the usual manner. Between the interior of the casing B and the fire-pot E is left a space, which at the rear is inclosed by means of a flue, G, which from the base A extends upward to a point slightly above the vertical center of the mica section, from whence said flue extends rearward and upward, so as to form a back pipe, G′. From the flue G a ledge, H, extends horizontally between the upper edge of the fire-pot and the adjacent portion of the casing B, so as to close the space between the same, except at the front side, where is left a flue, I, which extends downward to the plate A′, that forms the upper side of the ash-pit, from whence said flue opens laterally outward and downward into the side bottom flues K, and through the same communicates with the rear ascending-flue G. As thus constructed and arranged, it will be seen that the course of heated escaping products of combustion are down the front or diving flue, rearward through the side bottom flues, and then upward through the ascending or back flue into the exit-pipe, by which means the following results are obtained: The escaping gases are carried directly to the front side and base of the stove, at which points their heat is most effective in warming the room; from thence said gases, with diminished temperature, pass into and through the side bottom flues and into the rear ascending flue, the front side of which is in contact with the fire-pot, and forms a part of the combustion-chamber, so that the temperature of said gases is again raised to or near their former degree, their volume correspondingly augmented, and the rapidity of their passage through said ascending flue and the exit-pipe greatly increased; the effect of such reheating of said gases being to materially improve the draught of the stove, and enable it to be used in places where stoves of usual construction would not operate. The upper section L has a square form horizontally, and has arranged within its interior a correspondingly-shaped oven, M, between which and the sides, rear, and top of said section is left a space or flue, N, that communicates at its lower end with the combustion-chamber F, and at its rear side with a cross-pipe, O, which connects said flue with the back pipe G′. A door, *m*, incloses the front side of said oven, and permits access to its interior when desired. Immediately below the oven M, and within the combustion-chamber F, is placed a magazine, P, the upper end and front side of which extends forward through the casing, and is provided with an opening, P, for the admission of coal. As seen in Fig. 3, the front side of the magazine is extended inward, so as to give substantially the same space between the same and the adjacent portion of the mica section as is left between the sides of said magazine and section. By this arrangement of the oven and magazine, each is rendered independent of the other, instead, as has heretofore been the

case, of being so combined as to enable access to the magazine to be had only after the oven-door was opened and a portion of the bottom of the oven removed.

Having thus fully set forth the nature and merits of my invention, what I claim as new is—

1. In a magazine heating-stove, the arrangement of the rear ascending flue within the casing of the fire-pot section, substantially as and for the purpose specified.

2. In a magazine heating-stove, the construction and relative arrangement of the casing B, the fire-pot E, the flues G and I, and the ledge H, substantially as and for the purpose shown.

3. In a magazine heating-stove, a diving-flue situated wholly in front of the fire-pot, substantially as and for the purpose set forth.

In testimony that I claim the foregoing I have hereunto set my hand this 22d day of May, 1872.

ALBERT C. CORSE.

Witnesses:
JOHN R. YOUNG,
GEO. S. PRINDLE.