No. 625,904 Patented May 30, 1899.

A. J. SIMMONS.

AUTOMATIC FLUID SEPARATOR.

(Application filed Aug. 27, 1898.)

(No Model.) 2 Sheets—Sheet 1.

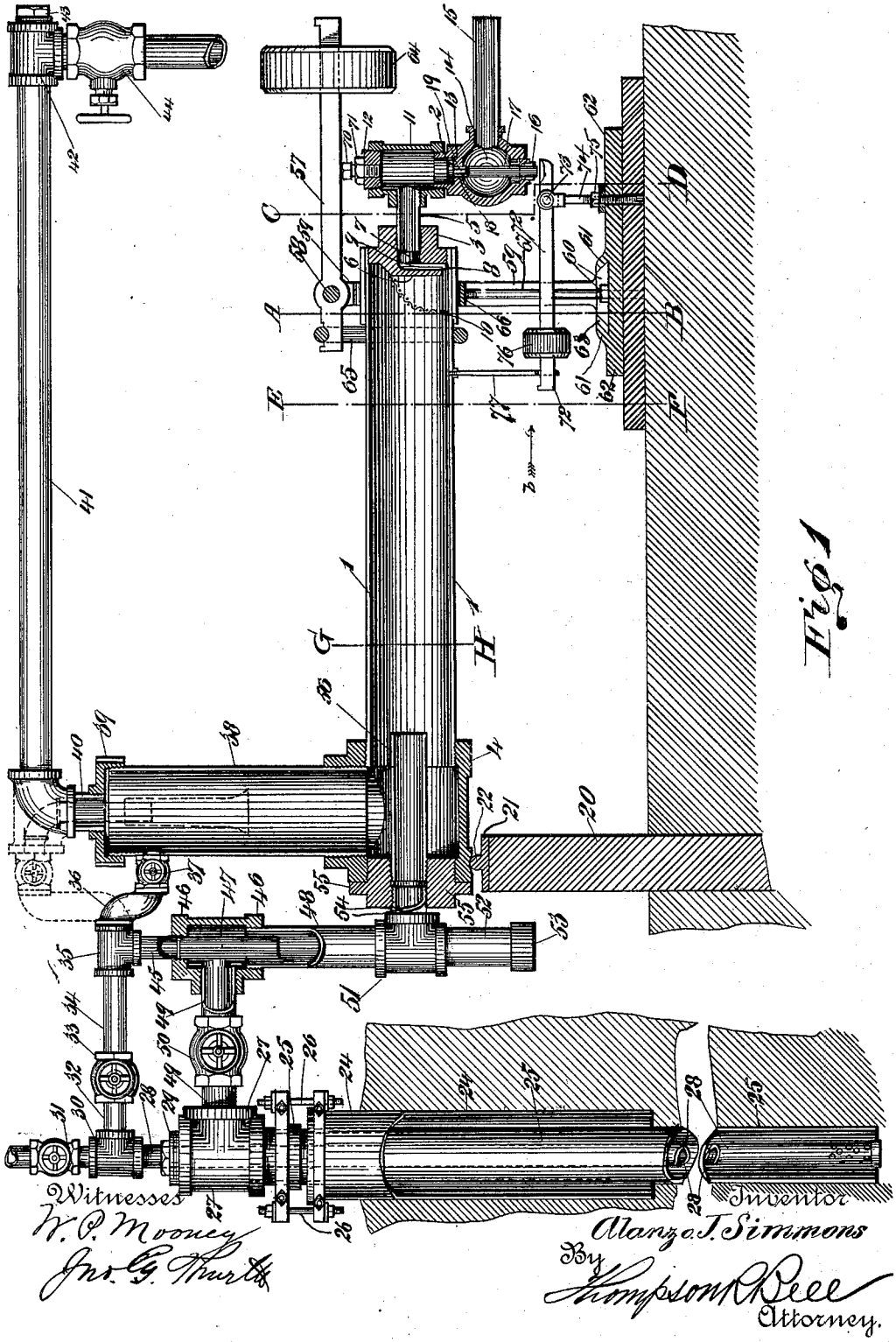

Fig. 1

Witnesses
W. P. Mooney
Jno. G. Thurtle

Inventor
Alanzo J. Simmons
By Thompson & Bell
Attorney.

THE NORRIS PETERS CO., PHOTO-LITHO., WASHINGTON, D. C.

No. 625,904. Patented May 30, 1899.

A. J. SIMMONS.

AUTOMATIC FLUID SEPARATOR.

(Application filed Aug. 27, 1898.)

No Model.) 2 Sheets—Sheet 2.

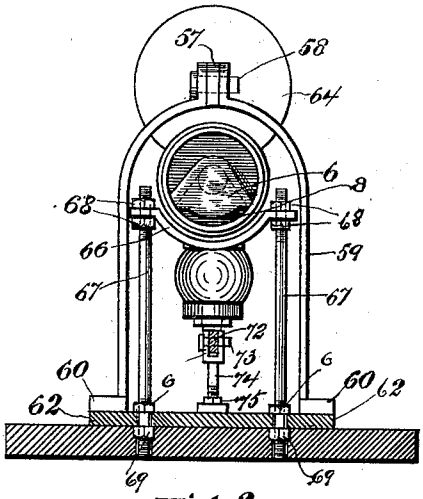

Fig 2

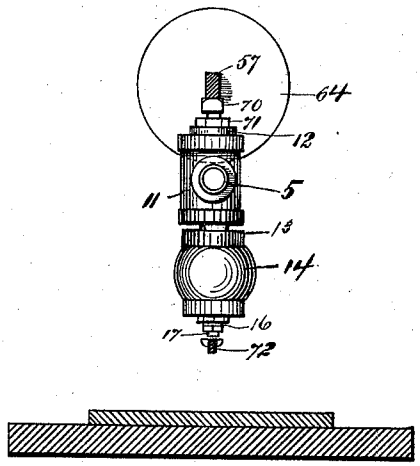

Fig 3

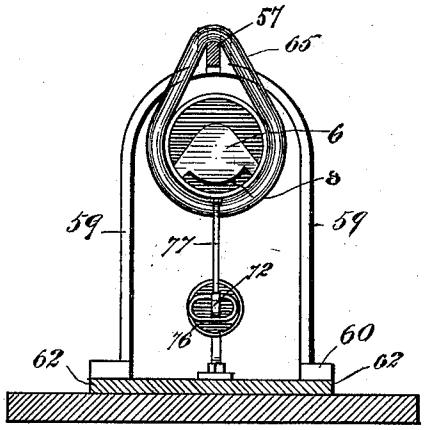

Fig 4

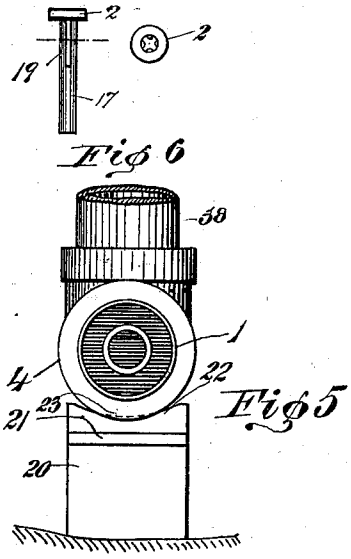

Fig 6

Fig 5

Witnesses
W. P. Mooney
Jno. G. Thurtle

Inventor
Alonzo J. Simmons
By Thompson & Bell
Attorney

THE NORRIS PETERS CO., PHOTO-LITHO., WASHINGTON, D. C.

UNITED STATES PATENT OFFICE.

ALONZO J. SIMMONS, OF INDIANAPOLIS, INDIANA.

AUTOMATIC FLUID-SEPARATOR.

SPECIFICATION forming part of Letters Patent No. 625,904, dated May 30, 1899.

Application filed August 27, 1898. Serial No. 689,643. (No model.)

To all whom it may concern:

Be it known that I, ALONZO J. SIMMONS, a citizen of the United States, residing at Indianapolis, in the county of Marion and State of Indiana, have invented new and useful Improvements in Automatic Fluid-Separators, of which the following is a specification.

My invention relates to certain new and useful improvements in an apparatus for separating fluids of different specific gravity that are mechanically united in one body, and said invention is particularly applicable for use in connection with oil and gas wells for the purpose of separating the water, carried with the flowing or escaping fluid and held in suspension therein, from either the gas or the oil as it is discharged from the well.

The object of this my invention is to provide a simple and durable apparatus that will automatically operate to effectually collect and separate a gaseous body from a fluid without either obstructing or in any manner tending to retard the velocity or reduce the amount or force of flow of the fluid; also, to provide means for effectually drying the gaseous body eliminated from a liquid body; also, to provide means to automatically operate to decant or draw off the weightier fluid when a surplus of the same has been collected.

In the accompanying drawings similar numerals of reference designate like parts throughout the several views.

Figure 1 is a sectional broken view of my apparatus, showing it connected to a gas or oil well. Fig. 2 is a transverse sectional view of the same, taken through the line A B. (See Fig. 1.) Fig. 3 is a similar view taken through the line C D. (See also Fig. 1.) Fig. 4 is a similar view taken through the line E F. (See also Fig. 1.) Fig. 5 is a similar view taken through the line G H, (see also Fig. 1,) and Fig. 6 shows detail views of the drain or drip valve.

This apparatus is particularly adapted for use in connection with either gas or oil wells; and it consists in a hollow lever 1, which may be either rectangular or cylindrical in cross-section and of a sectional area determined by the capacity of the well, the pressure of the fluid flowing therefrom, and the area of the releasing, drip, or drain valve 2, hereinafter more fully set forth. The said lever 1 is closed at its free end by the plug 3, which is securely screwed or otherwise firmly secured therein, and said lever has its opposite end screwed into or otherwise secured in the T-piece 4, which piece may be of the usual commercial form of construction. The length of the hollow lever or separating-chamber 1 may also be increased or decreased in proportion to the capacity of the flow from the well to which the apparatus is attached, and this dimension is also in a measure dependent on the area of the drip or drain valve 2, for the reason that if the area of the said valve is made proportionately greater the lift thereof shall necessarily be required to be less than that of a valve of lesser area to obtain the required amount of area of opening, and consequently a lever or separating-chamber 1 having a proportionately greater diameter will be required to be used in connection with the valve of greater area. The plug 3 is drilled centrally and tapped to receive the nipple 5, and on the inner side of said plug is formed integral thereon the apron or shield 6, which extends over the discharge-opening 7 downwardly toward and sufficiently close to the inner bottom surface of the separating-chamber or lever 1 to form a narrow semicircular discharge-opening 8 and to form a siphon port or passage 9, leading to the opening 7. A suitable screen 10, of wire-netting or other suitable woven or imperforated material, is closely fitted at its edges to the interior of the said chamber 1 directly in front of the said opening 8, and is provided for the purpose of straining the fluid to be discharged and preventing sand or other sediment from passing through the openings 7 and 8 and being deposited on the drip-valve seat, thereby causing a leakage of the gas or lighter fluid contained in said separating-chamber 1. A T-piece 11 is connected to one end of the nipple 5, the top opening of which T-piece is closed with the threaded plug 12, and into the bottom opening of said T-piece is screwed or otherwise secured the valve-seat 13. The valve-seat 13 is provided with the chamber 14, having a suitable discharge-pipe 15 connected thereto for the purpose of conveying the waste fluid to a suitable place as rapidly as it is discharged through the opening under the valve 2. On the bottom portion of

the said chamber 14 is provided a suitable stuffing-box 16, through which the prolonged end 17 of the valve-stem passes, and the said stuffing-box is provided for the purpose of preventing the fluid which passes into and through said chamber being wasted by leakage. The use of this latter device only becomes necessary when the apparatus is connected to or used in connection with oil-wells to prevent the loss of oil. The valve-stem 17 extends through the opening 18, formed in the valve-seat 13, and is adapted to work freely therein, and said valve-stem has the longitudinal grooves 19, milled or otherwise formed therein for the purpose of permitting the free flow of the weightier fluid through said seat-opening 18.

The T-piece 4 rests on and is supported by the fulcrum-stand 20, secured in any suitable manner in the ground, and on the top of which latter is secured the fulcrum-plate 21, the knife-edge 22 of which fits into the transverse groove 23, formed in the bottom side of said T-piece.

The well to which this apparatus is applicable may be of any of the usual forms of construction of driven or bored wells, and this apparatus is peculiarly adapted to a novel form of construction of well illustrated in a general way in the drawings to show the manner of connecting the said separating apparatus thereto, and the said well will form the subject-matter of another application. The outer casing 24 of the well usually extends down into the earth and rock sufficiently deep to shut off all water and springs to prevent a leakage of same into the oil or gas well. Inclosed within the casing 24 is the shaft 25, which is anchored at its top end by suitable distance or anchor bolts 26 to the top end of the casing 24, which latter is firmly and securely fixed in the ground. On the top end of the shaft 25 is screwed the T-piece 27, and extending from the bottom of the well is the inner shaft 28, which is firmly screwed at its top end into the plug 29 till it projects therethrough a sufficient distance to permit the T-piece 30 to be connected or screwed thereto, as shown in Fig. 1. Connected at the top end of said T-piece 30 is the globe-valve 31, which is provided for the purpose of permitting the fluid under pressure to escape from the well directly into the atmosphere at times when obstructions of any nature have formed or collected in said shaft and have obstructed the free flow of the fluid. A nipple 32 is screwed into the T-piece 30, and on said nipple is screwed or otherwise connected the globe-valve 33. A nipple 34 connects said globe-valve 33 to said T-piece 35, and to the latter is connected the angle connection 36, which latter may either be formed of one integral piece or it may be composed of two elbows connected together by means of a connecting-nipple. On the end of said connecting-piece 36 is screwed the globe-valve 37, which connects with the vertically-extending receiving-chamber 38. The top end of the receiving-chamber 38 is provided with a cap 39, firmly screwed or otherwise secured thereon, and securely screwed into said cap is a suitable nipple 40 or other connection, whereby a section 41 of a branch pipe leading to the service or main pipe is connected to said receiving-chamber 38. A T-piece 42 is connected on the end of said section 41, into one arm of which T-piece is screwed or otherwise removably secured the plug 43, which is provided for the purpose of permitting access to the interior of said pipe 41 without detaching or disconnecting any of the parts or "breaking" a joint. A suitable globe-valve 44 is connected to the other arm of said T-piece 42 and is provided for the purpose of shutting off the supply of fluid flowing from the well from the main or service pipe when so required. A nipple 45 connects the T-piece 35 to the lower T-piece 46, and within said T-piece 46 is the siphon-tube 47, which extends downwardly some little distance beyond the said T-piece into the connecting-pipe 48, and said pipe is arranged thus for the purpose of causing a vacuum more or less perfect, according to the velocity of the flow of the fluid through said tube 47, to assist and accelerate the flow of the fluid collected between the inner shaft 28 and the outer shaft 25. The side arm of the T-piece 46 is connected to the side arm of the T-piece 27 by the nipples 49, connected to the ends of the globe-valve 50, which latter is provided for the purpose of shutting off the supply of gas or fluid from this source to and into said T-piece 46. The connecting-pipe 48 connects the T-piece 51, and to the bottom arm of the latter is connected the nipple 52, which is provided at its bottom end with the removable closing-cap 53. The depending pipe 52, extending below the level of the fluid contained in the collecting or separating chamber 1, serves the purpose of a repository for receiving and collecting particles of matter that may be carried with the fluid and for the purpose of preventing said particles, as much as possible, passing through and into the chamber 1. A nipple 54 connects the said arm of the said T-piece 51 to the plug 55, which latter is securely screwed into the T-piece 4. A tube 56 is screwed centrally into said plug 55 to abut against and connect to the nipple 54 and is provided for the purpose of conveying and discharging the fluid or fluids at a point beyond the open bottom or base of the receiver 38 to prevent spray or weightier fluid being discharged into said receiving-chamber 38 and being carried over to and through the pipe 41 into the main or service pipe.

I will now describe the mechanism provided for the purpose of automatically operating the releasing, drip, or drain valve 2, by which latter the heavier fluid is drained or permitted to escape from the collecting or separating chamber 1 when said fluid has attained a cer-

tain predetermined or fixed height. A counterbalance-lever 57 is pivotally mounted on its fulcrum-pin 58, which latter is supported by its fulcrum-standards 59, the bases or feet 60 of which have their edges tapered to correspond with the taper of the inner edges of the holding-down strips 61, formed integral on the base-plate 62, and between which strips the said feet 60 are securely clamped and held in position by the securing-keys 63. The lever 57 is provided with the counterbalance-weight 64, which is adjustably mounted on the longer arm of said lever, and the shorter arm of said lever is notched to receive the saddle 65, which latter extends around and beneath the free end of the collecting and separating chamber or lever 1 for the purpose of yieldingly supporting the same at such point. A cross-bar 66 (see particularly Fig. 2) is preferably concaved to form a bearing and support for the free end of the collecting and separating chamber or hollow lever 1 when the latter is fully depressed. Said cross-bar is adjustably secured on the top ends of the standards 67 by the screw-nuts 68, said standards having their bottom ends projecting through the base-plate 62, whereto they are secured by the securing-nuts 69. A set-screw 70, screwed into the plug 12 directly underneath the lever 57, is provided for the purpose of adjusting and limiting the amount of play or swing of said lever, and the said set-screw is held and locked in its adjusted position by the lock-nut 71. The valve-operating lever 72 is fulcrumed on a suitable fulcrum-pin 73, supported by the standard 74, which latter is adjustably screwed into the bottom base-plate 62 and is locked in position by the nut 75, screwed on the threaded end of said standard. The shorter lever-arm of the lever 72 is preferably broadened or spoon-formed at its point of contact with the valve-stem 17, which form is adopted for the purpose of insuring contact with said spindle or stem at all times with the free end of said lever and under such conditions as when the said lever is caused to swing sidewise out of alinement. The longer arm of said lever is provided with the weight 76, which is adjustably mounted thereon, and the vertical swing of said arm is limited to that of the depression of the collecting and separating chamber or lever 1 by the rod 77, secured at its top end to the bottom side of said chamber or lever 1 by being screwed therein and locked by a suitable lock-nut. The bottom end of said supporting-rod is looped in the form shown in Fig. 4, so as to permit either or both the chamber 1 and the lever 72 to swing independently of each other.

The fluid flowing from the well into the separating-chamber or hollow lever 1, which latter, owing to its length and its area relative to the pipes connecting it with the well, well-shafts, the horizontal position of said chamber 1, and the position of the receiving-chamber 38 on said separating-chamber 1 and the area of the latter, has the velocity of its flow not only retarded, but the direction of the flow of the fluid is reversed, which motion tends to accelerate the separation of the weightier and lighter bodies constituting the fluid, whether the latter be constituted of either gas and water, gas and oil, or oil and water. The weightier body of the fluid will be collected in the chamber 1, while the lighter body will ascend into the receiving-chamber to the pipe 41, through which it is conducted into the main or service pipe. When a quantity of the weightier fluid is collected in the collecting and separating chamber 1 sufficient to more than counterbalance the weighted counterbalance-lever 57 and to depress the free or yielding end of the said collecting-chamber or hollow lever 1, the depending rod 77 descends to release the weighted end of the valve-operating lever 72, thereby permitting the shorter arm of said lever to ascend or move toward the projecting end of the valve-stem 17, while the said valve-stem is at the same time descending. Thus a more rapid and increased travel compounded of the descending motion of the chamber or lever 1 and the ascending motion of the shorter arm of the lever 72 is imparted to the valve 2 to lift it rapidly and its full extent. The area and length of the separating-chamber or hollow lever 1 may, by close calculation, be proportioned to have in itself the desired resiliency to operate the releasing-valve 2 without the use of the automatic releasing-lever mechanism described; but I prefer to employ the automatic lever system above described for the reason that the operation of the valve is rendered more positive, sensitive, requires less nicety in adjustment, and is less liable to become deranged and inoperative.

When the gas flowing from the well is excessively saturated with water, it becomes necessary to provide an additional means whereby the water will be precipitated into the collecting-chamber 1. To accomplish this purpose, the velocity of the flow of the incoming fluid must be retarded in order to give time for precipitation. With this object in view I provide a jet-pipe, (see dotted lines in Fig. 1,) which extends downwardly in the interior of the receiving-chamber 38 and terminates in a gradually-enlarged or flaring discharge-opening, which means direct the incoming fluid downwardly against the upcoming and escaping fluid with which it intermingles and retards its motion, the motion of both the fluids being opposite in direction.

Having thus fully described this my invention, what I claim as new and useful, and desire to cover by Letters Patent of the United States therefor, is—

1. In an automatic fluid-separator, the combination with a horizontally-disposed separating-chamber pivoted at one end and having its remainder free to rise and fall, of a drip or drain valve at the free end of said chamber for relieving it of its contents, and

means for opening said valve on the descent of the chamber.

2. In an automatic fluid-separator, the combination with a horizontally-disposed separating-chamber pivoted at one end and having its remainder free to rise and fall, of a drip or drain valve at the free end of the chamber for relieving it of its contents, and a pivoted lever operated by the chamber on its descent to coöperate with and unseat the valve.

3. In an automatic fluid-separator, the combination with a horizontally-extending hollow lever pivotally mounted at one end and free at its other end and an escape or drip valve connected to the free end of said hollow lever, of a weighted lever having its weighted or descending end connected to the free end of said hollow lever, said weighted lever having its free end arranged to coöperate in its movement with the hollow lever to open said drip-valve when the latter is depressed by the gravity of the fluid collected and contained therein.

4. In an automatic fluid-separator, the combination with a horizontally-extending hollow lever pivotally mounted at one end and free at its other end, a weighted counterbalancing-lever having its free end or lifting end connected to the free end of said hollow lever and an escape or drip valve connected to the free or descending end of said hollow lever, of a weighted lever having its weighted or descending end connected to the free or descending end of said hollow lever said weighted lever having its free end arranged to cooperate in its movement with the hollow lever to open said valve when said hollow lever is depressed by the gravity of the fluid collected and contained therein.

5. In an automatic fluid-separator, the combination with a horizontally-extending yielding hollow lever pivoted at one end and free to rise and fall at its other end, an escape or drip valve connected to the free end of said hollow lever, and means for opening said valve when said hollow lever is depressed by the gravity of the fluid collected and contained therein, of a vertically-extending receiving-chamber connected at its bottom end to said hollow lever at or near the pivoted end of the latter, a suitable fluid-supply pipe connected to the pivoted end of said hollow lever and having its discharge end extending interiorly within said hollow lever beyond the open base of said receiving-chamber and a discharge-pipe connected to the top end of said receiving-chamber.

6. In an automatic fluid-separator, the combination with a horizontally-extending yielding hollow lever pivoted at one and free at its other end, an escape or drip valve connected to the free end of said hollow lever and means for opening said drip-valve when said hollow lever is depressed by the gravity of the fluid collected and contained therein, of a fluid-supply pipe extending vertically and downwardly beneath the level of the said hollow lever, a means for closing the end of said pipe and a horizontally-extending pipe connected to said supply-pipe above the closed end thereof and having its other end connected to the pivoted end of said hollow lever.

7. In an automatic fluid-separator, the combination with a horizontally-extending yielding hollow lever pivoted at one end and free to rise and fall at its other end, of a closing-plug at the free end of said lever and having an interior induction-opening below the level of the exterior eduction or outlet passage, a valve connected to said outlet-passage and means for automatically opening said valve when said hollow lever is depressed by the gravity of the fluid collected and contained therein.

8. In an automatic fluid-separator, the combination with a horizontally-disposed pivoted separating-chamber having one end free to rise and fall, of a pivoted and weighted counterbalance-lever, a saddle hung from said lever, and encircling the free end of the chamber, and a valve operated on the descent of the chamber, adapted to relieve the same of its contents.

9. In an automatic fluid-separator, the combination with a horizontally-extending yielding hollow lever fixed at one end and free at its other end, an escape or drip valve connected to the free end of said hollow lever and a stop whereby said valve is automatically operated to open when said hollow lever is depressed by the gravity of the fluid collected and contained therein, of a stable bed-plate at and under the free end of said hollow lever, standards secured at their bottom ends to said bed-plate and extending vertically under said hollow lever at the free end thereof and a supporting or stop bar extending transversely beneath said hollow lever and secured to said standards to be adjusted in a vertical direction either upwardly or downwardly.

10. In an automatic fluid-separator, the combination with a horizontally-extending yielding hollow lever fixed at one end and free at its other end, an escape or drip valve connected to the end of said hollow lever and means for opening said valve when said hollow lever is depressed by the gravity of the fluid collected and contained therein, of a vertically-extending receiving-chamber connected at its bottom end to said hollow lever at or near the fixed end of the latter, a fluid-supply pipe connected to the top end of said receiving-chamber extending downwardly in the interior of said chamber and terminating in a trumpet-formed or flared discharge-opening and a discharge-pipe connected to the top end of said chamber.

11. In an automatic fluid-separator, the combination with a horizontally-extending yielding hollow lever fixed at one end and free at its other end, an escape or drip valve connected to the end of said hollow lever, and

means for opening said valve when said hollow lever is depressed by the gravity of the fluid collected and contained therein, of a vertically-extending receiving-chamber connected at its bottom end to said hollow lever at or near the fixed end of the latter, a fluid-supply pipe connected to the top end of said receiving-chamber and extending downwardly in the interior of said chamber and terminating in a trumpet-formed or flared discharge-opening, a suitable supply-pipe connected to the fixed end of said hollow lever and having its discharge end extending interiorly within said hollow lever beyond the open base of said receiving-chamber, and a fluid-supply pipe connected to the top end of said receiving-chamber.

In testimony whereof I have hereunto set my hand and seal in presence of two subscribing witnesses.

ALONZO J. SIMMONS. [L. S.]

Witnesses:

THOMPSON R. BELL,

OLIVER M. SIMMONS.