(12) INTERNATIONAL APPLICATION PUBLISHED UNDER THE PATENT COOPERATION TREATY (PCT)

(19) World Intellectual Property Organization
International Bureau

(43) International Publication Date
15 June 2023 (15.06.2023)

WIPO | PCT

(10) International Publication Number
WO 2023/105273 A1

(51) International Patent Classification:
E04B 1/04 (2006.01) *E04B 1/348* (2006.01)

(21) International Application Number:
PCT/IB2021/061827

(22) International Filing Date:
16 December 2021 (16.12.2021)

(25) Filing Language: English

(26) Publication Language: English

(30) Priority Data:
117630 10 December 2021 (10.12.2021) PT

(71) Applicant: **DDN INVESTIMENTOS S.A.** [PT/PT]; Rua Leopoldo de Almeida, 9 A e B, 1750-137 Lisboa (PT).

(72) Inventor: **DA SILVA OLIVEIRA, Carlos António**; Rua Leopoldo de Almeida, 9 A e B, 1750-137 Lisboa (PT).

(74) Agent: **PEREIRA DA CRUZ, João**; J. PEREIRA DA CRUZ, S.A., Rua Vitor Cordon, 10A, 1249-103 Lisboa (PT).

(81) Designated States *(unless otherwise indicated, for every kind of national protection available)*: AE, AG, AL, AM, AO, AT, AU, AZ, BA, BB, BG, BH, BN, BR, BW, BY, BZ, CA, CH, CL, CN, CO, CR, CU, CZ, DE, DJ, DK, DM, DO, DZ, EC, EE, EG, ES, FI, GB, GD, GE, GH, GM, GT, HN, HR, HU, ID, IL, IN, IR, IS, IT, JO, JP, KE, KG, KH, KN, KP, KR, KW, KZ, LA, LC, LK, LR, LS, LU, LY, MA, MD, ME, MG, MK, MN, MW, MX, MY, MZ, NA, NG, NI, NO, NZ, OM, PA, PE, PG, PH, PL, PT, QA, RO, RS, RU, RW, SA, SC, SD, SE, SG, SK, SL, ST, SV, SY, TH, TJ, TM, TN, TR, TT, TZ, UA, UG, US, UZ, VC, VN, WS, ZA, ZM, ZW.

(84) Designated States *(unless otherwise indicated, for every kind of regional protection available)*: ARIPO (BW, GH, GM, KE, LR, LS, MW, MZ, NA, RW, SD, SL, ST, SZ, TZ, UG, ZM, ZW), Eurasian (AM, AZ, BY, KG, KZ, RU, TJ, TM), European (AL, AT, BE, BG, CH, CY, CZ, DE, DK, EE, ES, FI, FR, GB, GR, HR, HU, IE, IS, IT, LT, LU, LV, MC, MK, MT, NL, NO, PL, PT, RO, RS, SE, SI, SK, SM, TR), OAPI (BF, BJ, CF, CG, CI, CM, GA, GN, GQ, GW, KM, ML, MR, NE, SN, TD, TG).

(54) Title: MODULAR CONSTRUCTION SYSTEM

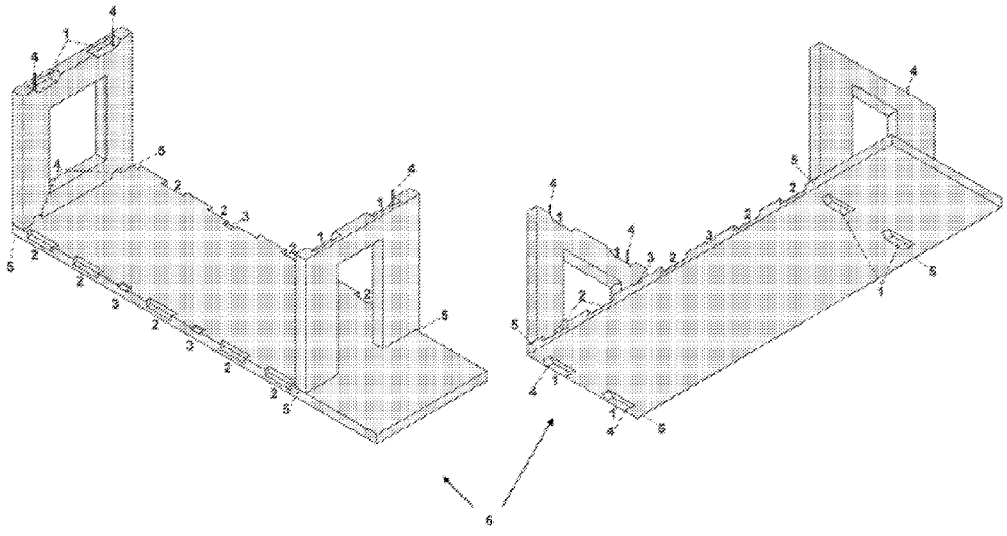

Figure 2

(57) Abstract: It is disclosed a modular construction system, comprised by multiple habitable modules, which are connected together along the horizontal and vertical plane, configuring a multi-storey building. The connections between adjacent modules, along the horizontal and the vertical plane, are carried out through a particular set of connections L1 to L5, allowing a simple and quick installation of the modules that make up the building, ensuring the desired mechanical, thermal and acoustic performance.

WO 2023/105273 A1

[Continued on next page]

Published:

— *with international search report (Art. 21(3))*

— *in black and white; the international application as filed contained color or greyscale and is available for download from PATENTSCOPE*

DESCRIPTION

MODULAR CONSTRUCTION SYSTEM

FIELD OF THE INVENTION

The present invention is enclosed in the field of construction systems. In particular, the present invention relates to modular construction systems.

PRIOR ART

Modular construction arises as a consequence of the civil construction sector's need to find increasingly industrialized construction systems with less waste, in order to make it more economical and optimize the use and reuse of material resources, thus meeting the new paradigm of society, and, consequently, of the civil construction sector: the economy, sustainability and speed in construction.

Such type of construction is characterized by dimensional standardization, repetition and standardization of processes and materials, promoting constructive efficiency from manufacturing to on-site assembly. The fact that modular construction is completely standardized and mechanized is important as it minimizes the risk of construction errors. The modular construction is also characterized by creative flexibility, as it allows for different architectural configurations to be obtained, through the different shapes that can be assigned to the blocks. In addition to the versatility, the ecological footprint of this type of solutions is quite reduced when compared to traditional construction, as it allows the reduction of about 90% of waste, reduction of energy consumption, reduction of up to 90% in vehicle movement, reduction of noise pollution at the construction site, and reduction of construction time by 50-70%. All these factors contribute to a better cost-effectiveness ratio. The materials commonly used are concrete, steel, wood, plastic and others (aluminium, glass, polyurethane foam).

However, despite the fact that modular construction systems have numerous advantages, they require time-consuming and exhaustive work in their design and project, which is mostly manual, from the functional organization of the building,

through the selection of materials, to the calculation of its performance and to its optimization. The precast industry already has monolithic components that add more than one structural function, but whose scope of application is limited, typically to technical passages. In terms of the construction of buildings and dwellings, the use of prefabricated structures is residual compared to traditional construction, and typically boils down to industrial buildings and one-story dwellings, or a maximum of two floors.

The present disclosure presents an improved solution in relation to the state of the art.

SUMMARY OF THE INVENTION

Thus, the object of this disclosure is a modular construction system for highly industrialized buildings, with fast execution and high quality, with reduced cost and environmental impact. This solution thus provides that all the advantages associated with modularity are applied to the construction of buildings, either in terms of flexibility in the configuration of the occupational area, this being apartments with multiple topologies or areas for any other kind of purposes, or in constructive terms, related to the simple and quick installation of the modules that make up the building, ensuring the desired mechanical, thermal and acoustic performance.

A fundamental aspect for all these advantages be achieved, according to this disclosure, is related to the structural connections between the building modules, which provide the necessary structural stability that also allows the construction of the building to be carried out along the vertical plane (with multiple floors).

In this way, the system of the present disclosure is comprised of a plurality of habitable modules, connected together, along a horizontal plane and/or a vertical plane of the building. According to the particularities of the described system, the connection between adjacent modules, along the horizontal plane, takes place through connections of L2 type and L5 type. Additionally, the connection between adjacent modules, along the vertical plane, or between a module on a vertical level and

a roof structure on a vertical level immediately above, takes place through connections of type L1 and type L4.

Particularly, the connection L2 is of male-female joint type, wherein one module comprises male joints and the adjacent module comprises female joints.

The L5 connection is implemented through reinforcing bars, installed along the horizontal plane, each interconnecting two adjacent modules.

The connection L1 is of male-female joint type, wherein one module comprises male or female joints, and the adjacent module or the roof structure comprises joints of a complementary type.

The L4 connection is implemented through reinforcing bars, installed along the vertical plane, each interconnecting a module with the adjacent module or with the roof structure.

The use of this type of structural connections guarantees the necessary structural stability that allows the construction of multi-storey buildings, as they allow the entire surface of adjacent modules to be in full contact with each other, and that this contact, in addition to being perfectly insulated, also guarantees the structural connection and consequent mechanical strength.

Furthermore, it allows to reduce the number of elements needed for the construction of a building, which increases the benefit compared to the traditional construction methods.

In addition, it allows for the standardization and aggregation of a large part of the construction elements, which helps to take greater advantage of the moulds, both in quantity and quality, as well as reducing and making profitable the labour that affects all the phases of operation, simplifying the process both in pre-fabrication and construction.

Additionally, the reduction in the number of elements necessary for the construction of a building contributes to obtain a structure with superior dynamic behaviour. In this specific case, the use of this type of connections between modules allows that the reduction in the number of elements does not translate into a reduction in the flexibility of the solutions that can be built.

DESCRIPTION OF FIGURES

Figure 1 – representation of an embodiment of a habitable module according to the invention. The reference signs represent:

1 – L1 type connection;

2 – L2 type connection;

3 – L3 type connection;

4 – L4 type connection;

5 – L5 type connection;

6 – habitable module;

9 – block for connecting common infrastructures;

10 – watertight connection box.

Figure 2 – representation of another embodiment of a habitable module according to the invention, that can be combined with the module represented in figure 1. The reference signs represent:

1 – L1 type connection;

2 – L2 type connection;

3 – L3 type connection;

4 – L4 type connection;

5 – L5 type connection;

6 – habitable module.

Figure 3 – representation of an embodiment of the system showing the connection between a plurality of habitable modules (6), both in the horizontal and vertical plane.

Figure 4 – representation of a L1 type connection, wherein the reference signs represent:

1 – L1 type connection;

7 – structural reinforcement;

8 – reinforcement elements.

Figure 5 – representation of a L2 type connection, wherein the reference signs represent:

2 – L2 type connection;

7 – structural reinforcement;

8 – reinforcement elements.

Figure 6 – representation of a L3 type connection, wherein the reference signs represent:

3 – L3 type connection;

3.1 – threaded rod;

3.2 – metallic plate;

3.3 - tightening nut;

6 – habitable modules;

7 – structural reinforcement;

8 – reinforcement elements.

Figure 7 – representation of a L4 type connection, wherein the reference signs represent:

4 – L4 type connection;

6 – habitable modules;

7 – structural reinforcement;

8 – reinforcement elements.

Figure 8 – representation of a L5 type connection, wherein the reference signs represent:

5 – L5 type connection;

6 – habitable modules.

DETAILED DESCRIPTION

The more general and advantageous configurations of the present invention are described in the Summary of the invention. Such configurations are detailed below in accordance with other advantageous and/or preferred embodiments of implementation of the present invention.

The modular construction system disclosed comprises multiple habitable modules, which are connected together along the horizontal and vertical plane, configuring a multi-storey building. By "habitable module", throughout the present disclosure, it is intended to refer to an area that can be occupied for dwelling purposes, such as apartments, or for the implementation and establishment of services of various natures such as shops or warehouses.

The connection between adjacent modules along the horizontal plane, is carried out through L2 and L5 type connections. In turn, the connection between adjacent modules along the vertical plane takes place through L1 and L4 type connections. With respect to the vertical plane, the building is finished by a roof structure. This structure can be of any type known from the state of the art, with the addition of incorporating connections L1 and L4, for connecting the habitable module immediately below.

In one embodiment of the system, the male-type joints of the connections L1 and L2, has a height ranging between 1 cm and 40 cm, and a minimum length of 3 cm. The length of the joint can be, at most, equivalent to the length of the wall. Obviously, the corresponding joint of the female type will be complementary, in

order to guarantee the coupling of the female type, preferably without gaps between the contact surfaces between the two joints. Specifically, if the male-type joint has a height of 40 cm and a length of 3 cm, the depth of the female-type joint must be at least 40 cm and its length at least 3 cm. In another aspect of the system, the male-type joint is defined by edges that make up angular arrangements ranging between 0° and 180°. In fact, on all edges of a male-type joint the same effect can achieved by changing the angle between adjacent edges: for example, in one embodiment the two edges may be perpendicular to each other, with angles of 90°. In another embodiment one edge has an angular arrangement of 100° and the other of 80°.

In another embodiment of the system, the length of a reinforcing bar of the connection L4 is such that 2/3 of its length is inserted in the lower habitable module and 1/3 in the upper module. In another embodiment the length of the reinforcing bar is least 30 cm.

In another embodiment of the system, the reinforcing bar of the connection L5 has a minimum diameter of 0.6 cm and a minimum length of 10 cm. In another embodiment, the reinforcing bar may be an iron bar or a Dywidag type bar, which may have circular, square, rectangular or other sections as long as the steel area of the section used is equivalent.

In another embodiment of the system, the connection between adjacent modules, along a horizontal plane, is complemented, in addition to L2 and L5 type connections, with L3 type connections. The purpose of using this type of complementary connection is to prevent differential deformations between the slabs that form the support platform of each module, and both the vertical and horizontal transmission of actions between slabs. Particularly, and for that purpose, each connection L3 is implemented by at least two threaded rods, installed one in each module and adapted to fix a metallic plate resting on a contact zone between the two modules.

In one embodiment of the system, the length of the threaded rod is at least 2 cm and the thickness of the metallic plate is at least 0.5 mm. The design should absorb the vertical and horizontal stresses in the various directions resulting from the design of the structure. Fixing the metallic plate to the contact zone between the modules can be done using a tightening nut, coupled to each threaded rod.

In another embodiment of the system, all connections between modules, are supplemented with a binder such as cement, to seal the respective connections, that is, to fill in existing gaps.

In another embodiment of the system, the number of connections between modules, along the horizontal and vertical plane, is variable. The number of connections L1 to L5 to consider in the vertical and horizontal coupling of module combinations depends on the building geometry and therefore on the dimensioning to be carried out. It is also important to mention that for the same building it is possible to consider modules with more connections with a lower load capacity or fewer connections with a higher load capacity.

In another embodiment of the system, each habitable module comprises a parallelepiped support platform, arranged in a horizontal plane, and at least two surrounding walls arranged in a vertical plane. In one embodiment, each surrounding wall is installed at one end of the platform. The dimensions of both the platform and the walls vary depending on the configurations of each project. The same applies to the thickness of the walls, which is also variable, however, as an example, and for a 5-storey building, this may vary between 10 cm and 30 cm. Typically, the support platform and the walls are reinforced concrete pieces, but other materials that with identical geometries are capable of transmitting equivalent efforts can be considered. The assembly between these parts, in light of the flexibility that the system, in particular, the set of connections L1 to L5, allow to achieve, may have various configurations, for example, the support platform could be the slab on which the floor will be installed or,

alternatively, it could be the ceiling, with the surrounding walls being fixed, in both cases, using connections L1 and L4. This constructive system is configured to allow the suppression or inclusion of surrounding or interior walls, as well as the suppression or inclusion of doors or windows in any of the surrounding or interior walls, or to include or suppress sections of the support platform, ensuring the structural stability of the building. This is achieved, once again, using the set of connections L1 to L5 which is used for the connection between modules and which guarantees the correct distribution of forces between them. The vertical and lateral coupling allows, through a suitable combination of modules to be coupled, to build buildings with different apartment typologies for dwelling, services and other types of use, with several floors in height, according to dimensioning.

In another embodiment of the system, the support platform comprises connections of the L2 and L5 type, embedded in it, for connecting between support platforms of adjacent modules along the horizontal plane, and connections of the L1 and L4 type for installation of the surrounding walls. The surrounding walls comprise connections of the L1 and L4 type, embedded in the lower and upper end for attachment to the support platform, depending on whether the platform is the floor section or the ceiling of a habitable module, respectively, and connections of the L1 and L4 type embedded in the upper end for connection to the support platform of an adjacent module or to a roof structure or embedded in the lower end for connection to a support platform of an adjacent module.

In another embodiment of the system, the L3 connections are installed on the support platform of two adjacent modules.

In another embodiment of the system, the support platform and the surrounding walls comprise an interior structural reinforcement. Said structural reinforcement is complemented with reinforcement elements in the areas where the L1, L2, L4 and L5 connections are embedded and where the L3 connections are installed.

Said reinforcement elements are implemented using steel rods, with a diameter section ranging from 0.6 cm to 2.5 cm. The reinforcement elements are used to absorb both vertical and horizontal loads resulting from the design of the structure.

In another embodiment of the system, each module comprises a block for connecting the common infrastructure of the building and the modules that constitute it. Common infrastructures concern water, sewage, electricity or communications networks, among others. Its dimensions vary depending on the dimension of each module.

In another embodiment of the system, each module additionally comprises at least one watertight connection box for accommodating pipes from an adjacent module. Typically, the box is made of PVC, metal or any other material. This box is used to link the infrastructure connections of the building, in particular, it can be used to accommodate electrical and/or communications installations, separated from hydraulic installations. The dimensions of this box vary depending on the dimension of each module.

As will be clear to one skilled in the art, the present invention should not be limited to the embodiments described herein, and a number of changes are possible which remain within the scope of the present invention.

Of course, the preferred embodiments shown above are combinable, in the different possible forms, being herein avoided the repetition all such combinations.

CLAIMS

1. Modular construction system for buildings, comprising a plurality of habitable modules, connected together along a horizontal and/or vertical plane of the building; the system being characterized by:

- the connection between adjacent modules along a horizontal plane, is carried out through connections of type L2 and type L5; and
- the connection between adjacent modules along a vertical plane, or between a module on a vertical level and a roof structure on a vertical level immediately above, is carried out through connections of type L1 and type L4,

wherein,

the connection L2 is of male-female joint type, wherein one module comprises male-type joints and the adjacent module comprises female-type joints;

the connection L5 is implemented through reinforcing bars, installed along the horizontal plane, each interconnecting two adjacent modules;

the connection L1 is of male-female joint type, wherein one module comprises male or female type joints, and the adjacent module or the roof structure comprises joints of a complementary type;

the connection L4 is implemented through reinforcing bars, installed along the vertical plane, each interconnecting a module with the adjacent module or with the roof structure.

2. System according to claim 1, wherein the connection between adjacent modules along a horizontal plane is complemented with L3 type connections;

wherein,

each connection L3 is implemented by at least two threaded rods, installed one in each module and adapted to fix a metallic plate resting on a contact zone between the two modules.

3. System according to claim 2, wherein the length of the threaded rod is at least 2 cm and the thickness of the metallic plate is at least 0.5 mm; and wherein,

the fixation of the metallic plate to the contact zone between the modules is carried out using a tightening nut, coupled to each threaded rod.

4. System according to any of the preceding claims, wherein the male-type joint of connections L1 and L2 has a height ranging between 1 cm and 40 cm, and a minimum length of 3 cm.

5. System according to any of the preceding claims, wherein the length of a reinforcing bar of the connection L4 is such that 2/3 of its length is projected to be inserted in the lower habitable module and 1/3 of its length is projected to be inserted in the upper module; and wherein the length of the reinforcing bar is at least 30 cm.

6. System according to any of the preceding claims, wherein a reinforcing bar of the connection L5 has a minimum diameter of 0.6 cm and a minimum length of 10 cm; the reinforcing bar being an iron bar or a bar of the Dywidag type.

7. System according to any of the preceding claims, wherein all the connections between modules comprise a binder for sealing the respective connections.

8. System according to any of the preceding claims, wherein the number of connections between modules, along the horizontal and vertical plane, is variable.

9. System according to any of the preceding claims, wherein a habitable module is comprised by:

a parallelepiped support platform, arranged in a horizontal plane;

and by

at least two surrounding walls installed in the platform; optionally each surrounding wall is installed at one end of the platform.

10. System according to claim 9, wherein

the support platform comprises connections of the type L2 and L5, embedded in it, for connection between adjacent modules along the horizontal plane, and connections of the type L1 and L4 for installation of the surrounding walls; and

the surrounding walls comprise connections of the type L1 and L4, embedded into the lower and/or upper end for attachment to the support platform; and L1 and L4 type connections embedded into the upper end for connection to the support platform of an adjacent module or into a roof structure or embedded into the lower end for connection to an adjacent module.

11. System according to claims 2, 9 and/or 10, wherein the L3 connections are installed on the support platform of two adjacent modules.

12. System according to claim 2 and according to any of claims 9 to 11, wherein the support platform and the surrounding walls comprise an interior structural reinforcement; said structural reinforcement being complemented with reinforcement elements in the areas where the L1, L2, L4 and L5 connections are embedded and where the L3 connections are installed; said reinforcement elements being implemented using steel rods, with diameter section varying between 0.6 cm to 2.5 cm.

13. System according to any of claims 9 to 12, wherein the dimensions and thickness of the support platform and surrounding walls of a module are variable, and the supporting platform and surrounding walls of a module being made of concrete.

14. System according to any one of the preceding claims, wherein each module comprises a block for connecting the common infrastructure of the building;

common infrastructures relating to water, sewage, electricity or communications networks.

15. System according to any of the preceding claims, wherein each module further comprises at least one watertight connection box.

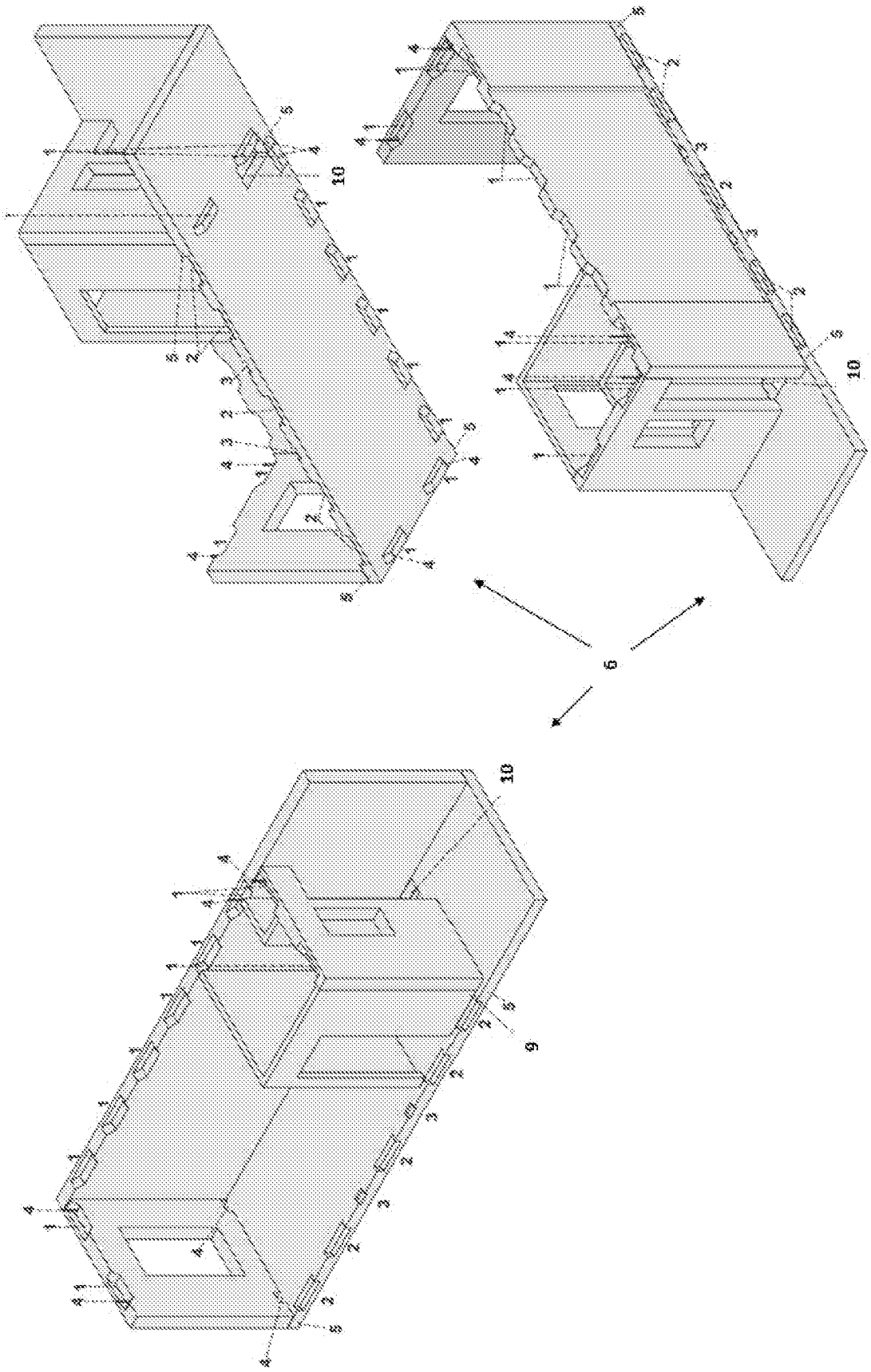

Figure 1

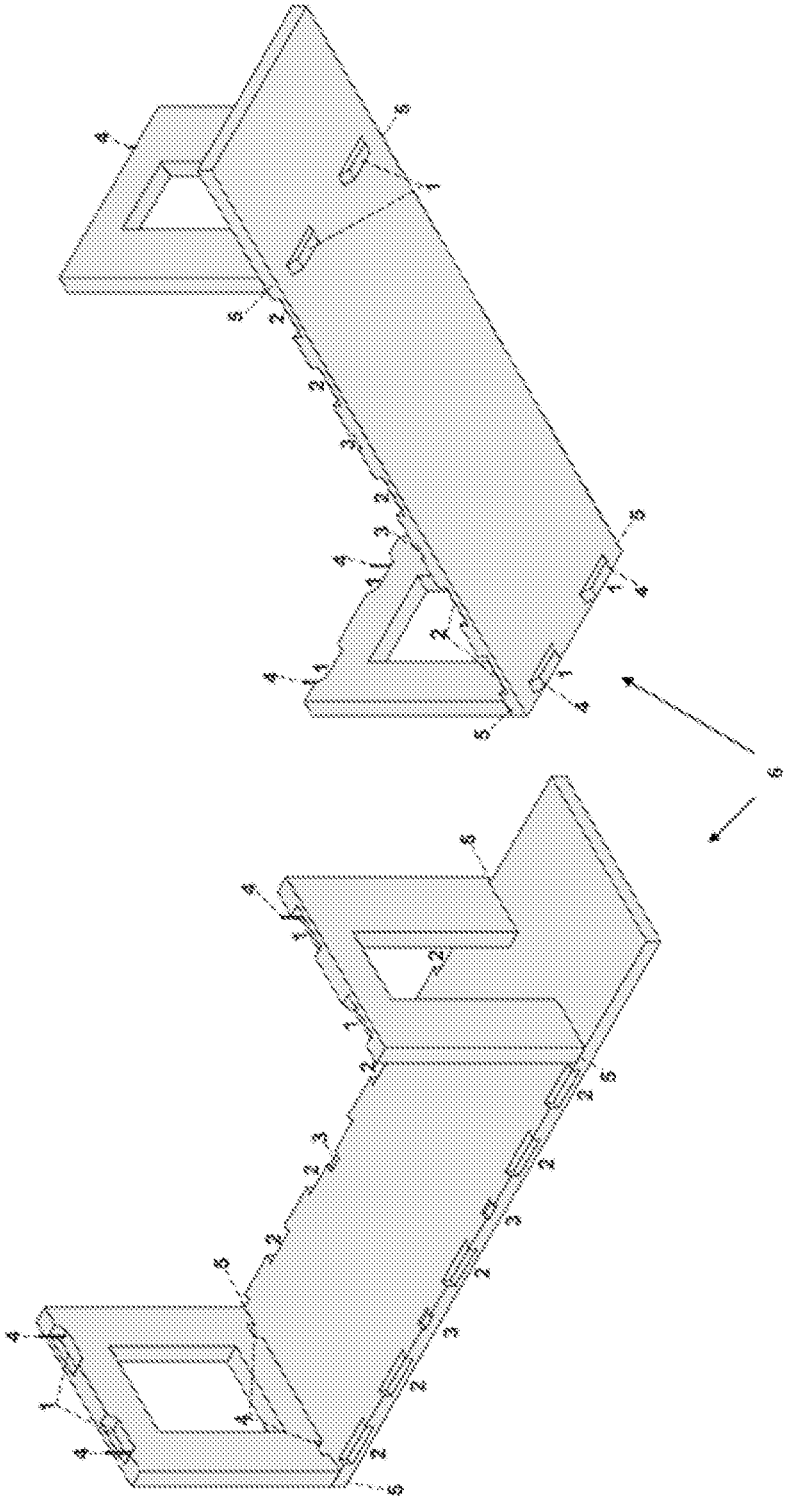

Figure 2

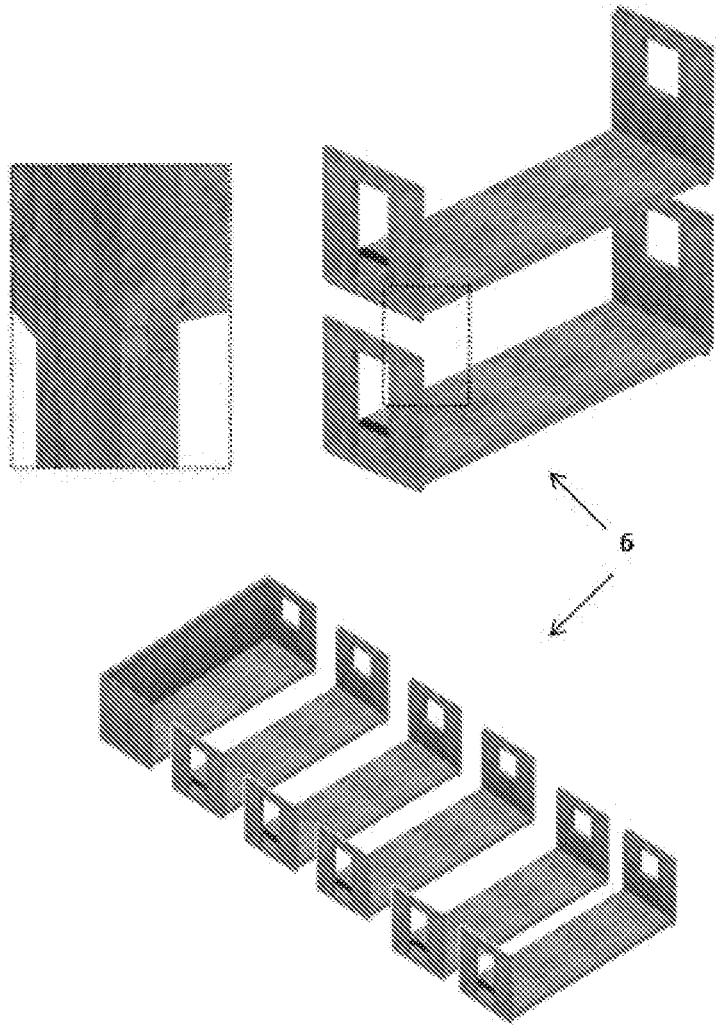

Figure 3

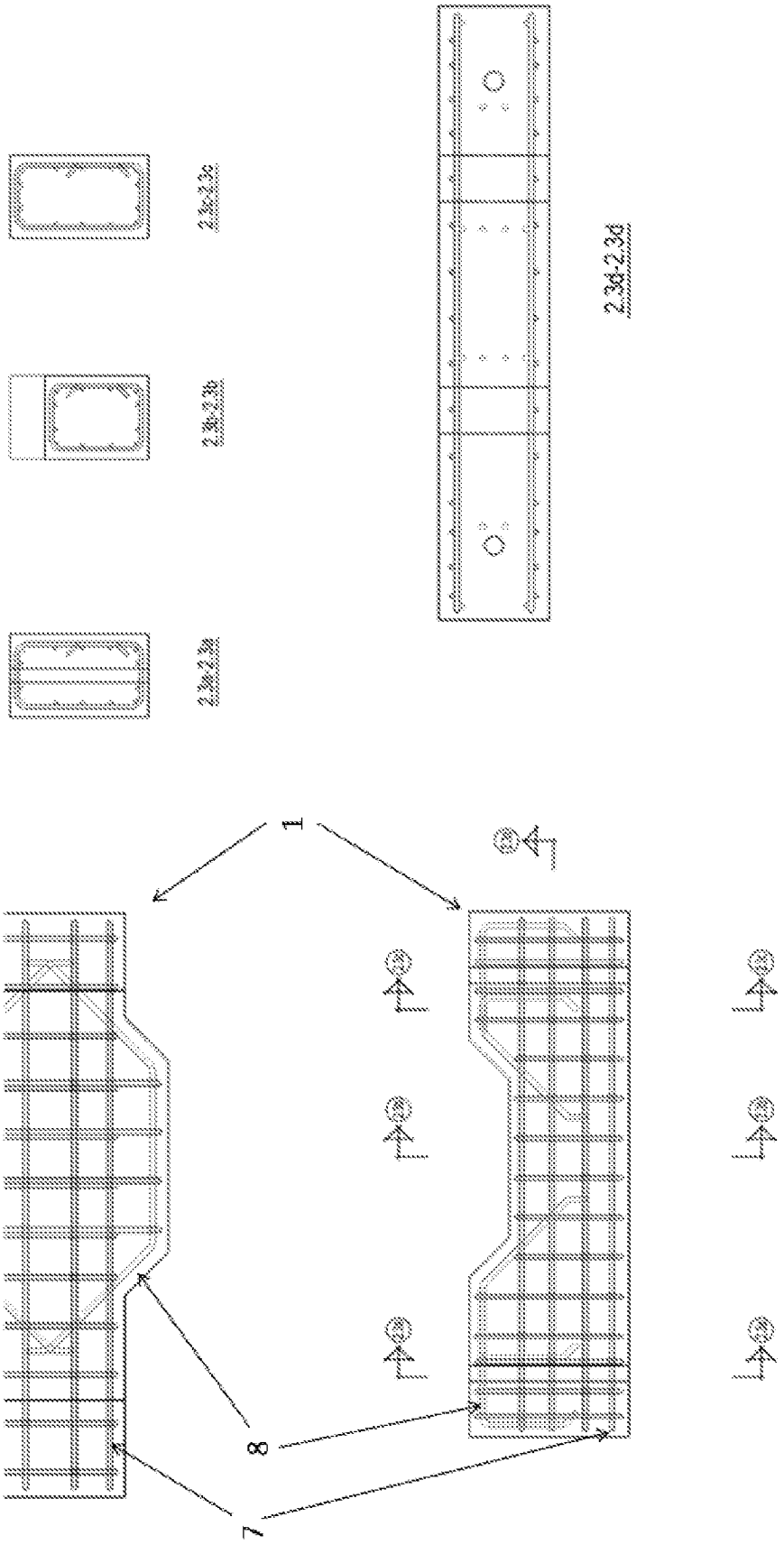

Figure 4

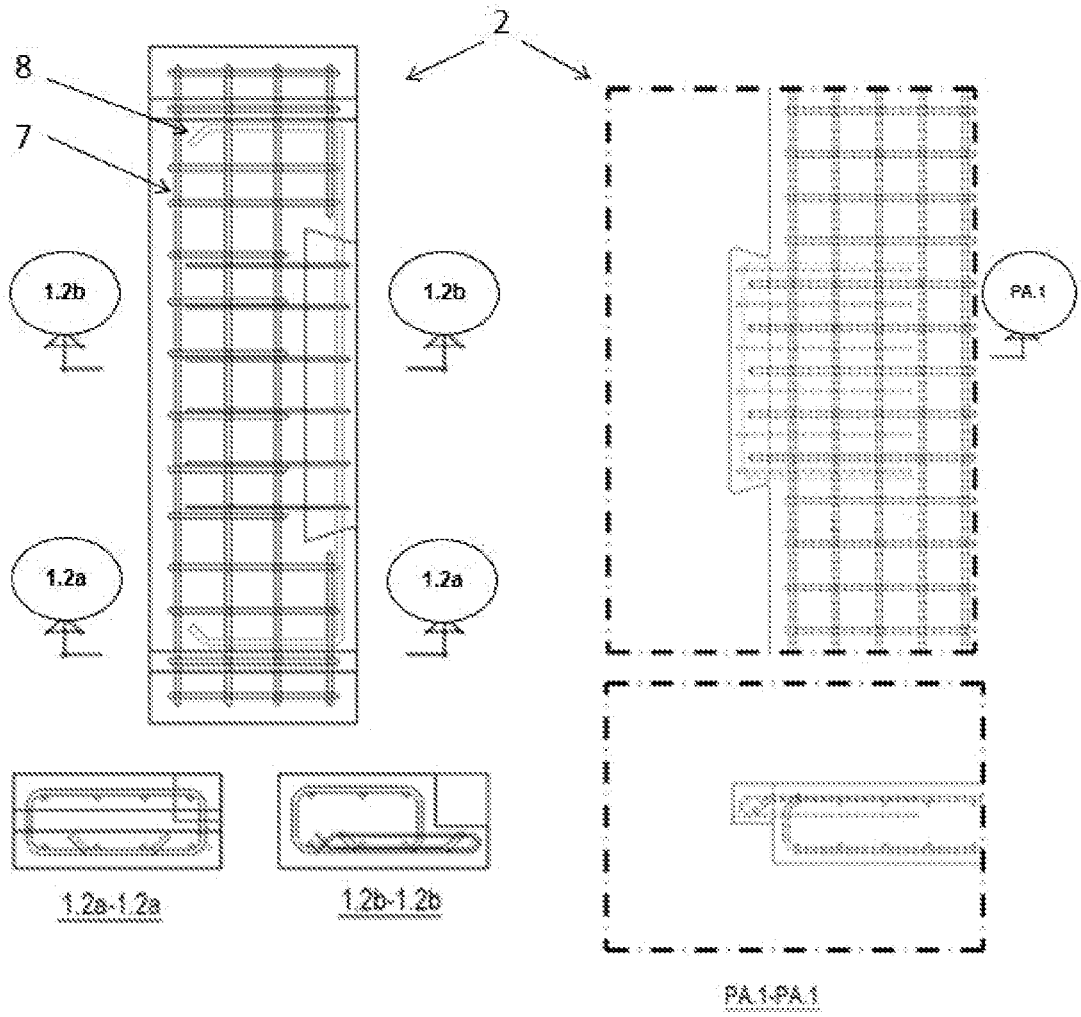

Figure 5

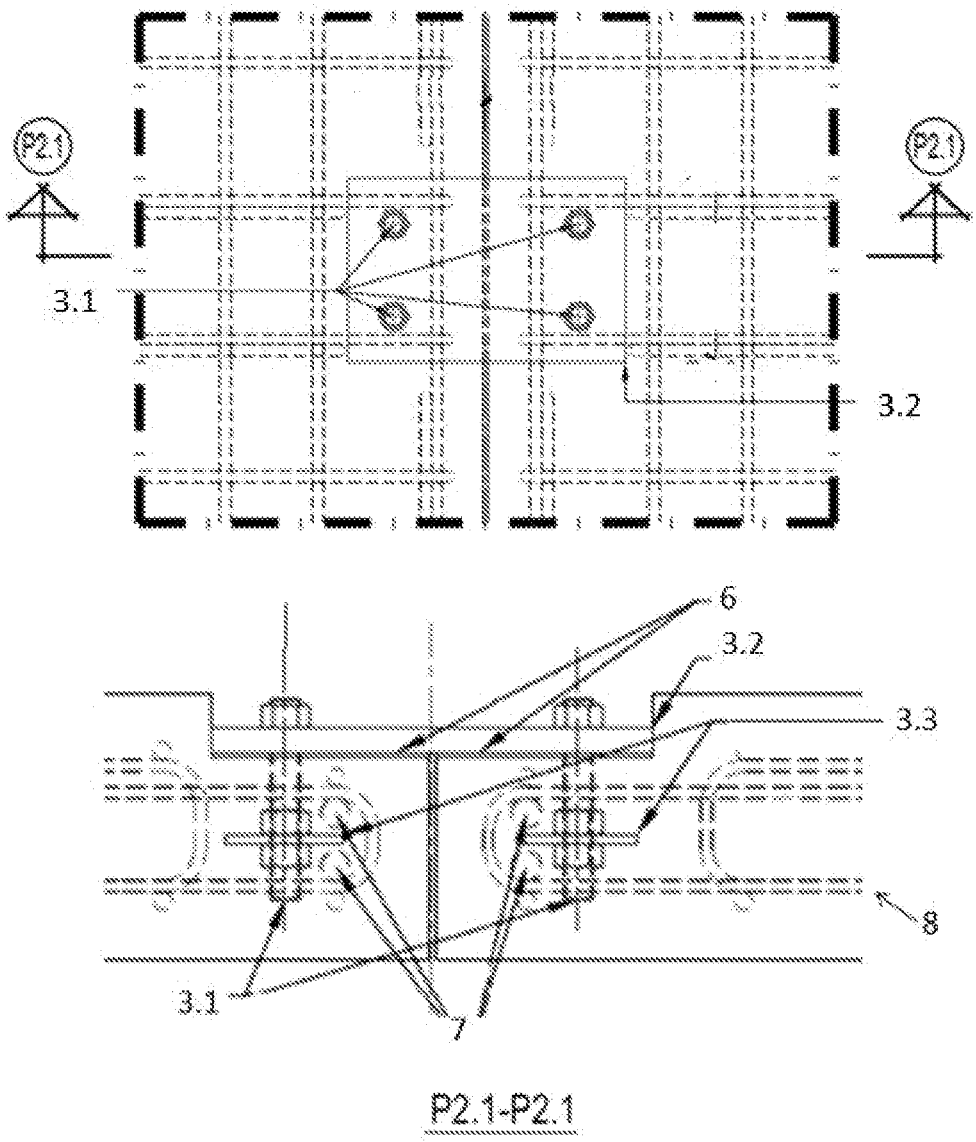

Figure 6

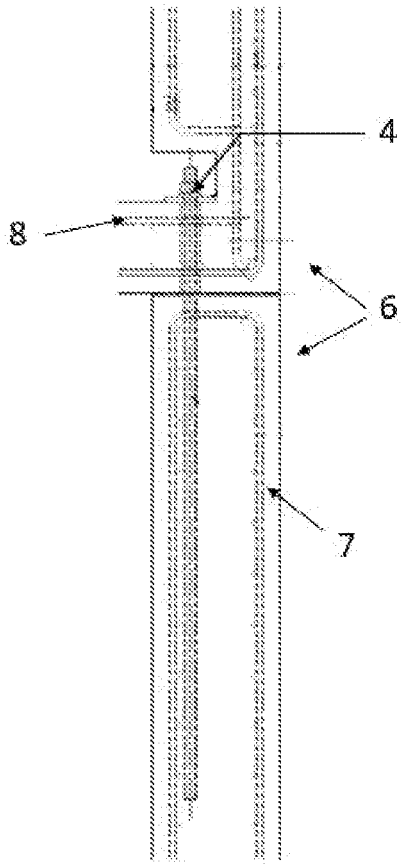

Figure 7

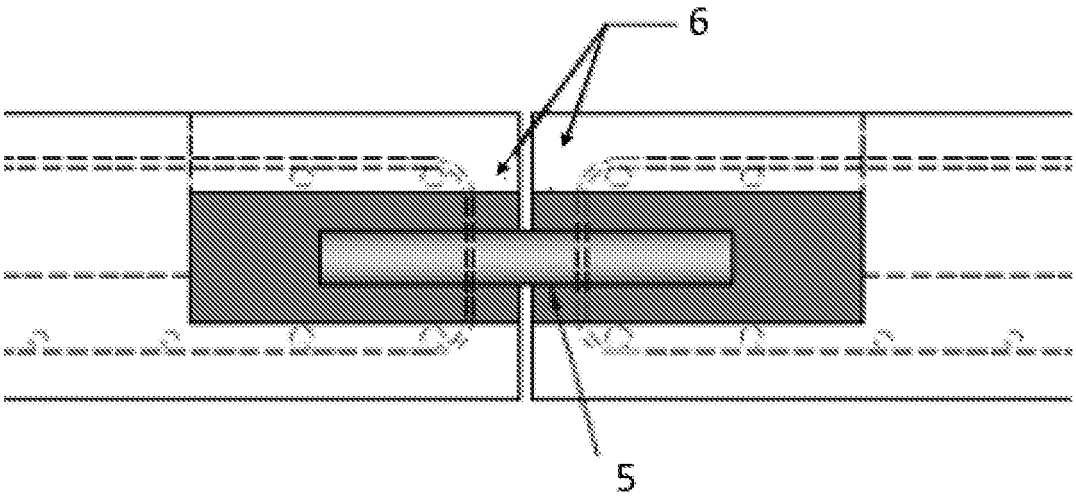

Figure 8