Jan. 31, 1950 L. F. MAYLE 2,495,749

CONTROL CIRCUIT FOR RAILROAD PASSENGER ENTERTAINMENT SYSTEMS

Filed April 30, 1947

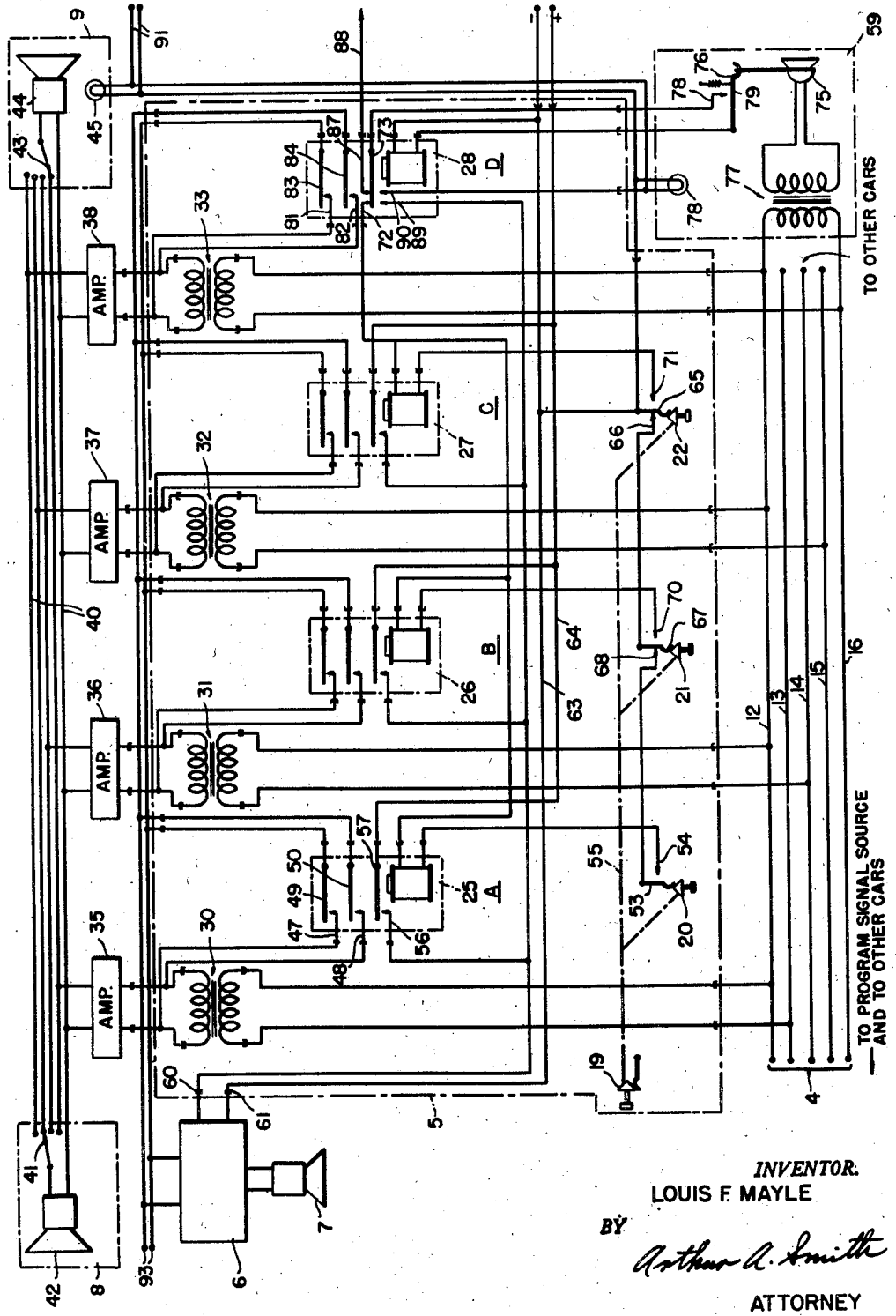

INVENTOR.
LOUIS F. MAYLE

BY
Arthur A. Smith

ATTORNEY

Patented Jan. 31, 1950 2,495,749

UNITED STATES PATENT OFFICE

2,495,749

CONTROL CIRCUIT FOR RAILROAD PASSENGER ENTERTAINMENT SYSTEMS

Louis F. Mayle, Fort Wayne, Ind., assignor, by mesne assignments, to Farnsworth Research Corporation, a corporation of Indiana

Application April 30, 1947, Serial No. 744,933

10 Claims. (Cl. 179—1)

1

This invention relates to audible entertainment program distribution systems and more particularly relates to improved distribution controlling apparatus for providing greater efficiency and flexibility of operation together with ease of maintenance.

An audible entertainment program distribution system may generally be classified as a public address system having means for applying to the input circuits thereof various types of entertainment signals, such as, recorded music, radio programs, or voice signals. Such a system usually consists of a centrally located signal source, under the control of a skilled operator having amplifying and distribution means adapted to supply the program material to a number of loudspeakers which may be in the same building or in remote locations. This type of controlling and amplifying apparatus is generally permanently mounted in a given location and is not usually expanded after the initial installation.

With respect to the operation of such a program distribution system on railroad trains whereby the program material may be disseminated to the passengers throughout the various cars of the train, a different and more complex problem is encountered. First, railroad operations introduce the peculiar problem of expandable or contractable conditions wherein, for instance, the actual make-up of a train may vary from day to day by the addition of a greater or lesser number of coach cars, sleeping cars or pullman cars. Inasmuch as the program distribution requirements of these particular cars also differ from each other, it is apparent that there is a need for a standardized arrangement for program distribution and control purposes whereby regardless of the types of cars, or the number of cars employed, the program distribution may be readily and efficiently accomplished. Secondly, the possibility of a skilled public address system operator being assigned to each train so equipped is relatively remote and it may be assumed that the apparatus control and the apparatus maintenance will be done by an unskilled operator, such as the train crewman. Therefore, the control apparatus and associated components should be easily replaceable. Thirdly, the nature of a railroad entertainment program installation necessitates the employment, in each individual car, of a control device adapted to handle the specific requirements of that particular car and at the same time must be readily adaptable for use in any other of the various types of cars which may be employed.

2

For instance, in a lounge sleeper type of car, there exists the condition of having a lounge space therein in which a relatively large group of passengers will receive the entertainment program from a single loudspeaker. At the same time the lounge sleeper car is also equipped with a plurality of sleeping compartments. It is desirable to provide these compartments with amplifying and reproducing apparatus whereby the compartment occupants may also selectively receive the entertainment program material. In the case of regular sleeping cars however, such as a bedroom car, there is only a plurality of private compartments to be supplied with program material and, therefore, there is no necessity for accommodating a large listener group. In the case of dining cars, pullman cars or coaches, there is only need for apparatus to provide program material to a large listening group.

It may be readily seen, therefore, that the railroad requirements for entertainment program distribution purposes present widely varied conditions dependent upon the types of cars which comprise a complete train. It is desirable, therefore, that the apparatus employed in such a program distribution system be standardized and extremely flexible in operation whereby regardless of the length of a train and the character of its make-up the program distribution controlling apparatus should be similar in all the cars and at the same time, for the purpose of interchangeability it is desirable that the control apparatus employed in any one particular car be readily and easily adaptable to any other type of car.

Therefore, it is an object of the present invention to provide a program distribution system having improved controlling means which are easily operable and readily interchangeable by unskilled personnel.

It is a further object of the present invention to provide a flexible controlling arrangement for an entertainment distribution system for railroad trains, or the like, which includes a standardized plug-in type of control unit having contained therein a plurality of standardized relays and transformers which are also adapted for plug-in operation, whereby the control unit or its components may be quickly interchanged or modified.

A still further object of the present invention is to provide, in a program distribution system, means whereby an operator may establish priority over the entertainment signals and may make voice announcements to group listeners and others.

Another object of the present invention is to provide, in a program distribution system, control means which may be readily expanded or modified to control either a single program channel or a plurality of program channels.

In accordance with this invention there is provided a plurality of train communication channels extending to each of a plurality of cars of a train and each channel being allocated for use to distribute a particular type of program material. Also, each car having private passenger compartments is provided with a plurality of car communication sub-channels extending only to the private compartments in that car and permanently coupled to the respective train communication channels. Each private compartment is equipped with a sound-reproducing device and selecting apparatus enabling the passenger to choose a particular program for reproduction. Also, in each car having accommodations for a group of passengers, there is located a sound-reproducing device, such as a loudspeaker and control switching apparatus, enabling an attendant or crewman to couple the loudspeaker selectively to all but one of the train communication channels. This one channel may be allocated for use solely for making general announcements. In addition, each car is equipped with a microphone station having automatic switching apparatus for coupling the microphone to the announcement channel and for coupling this channel to the group loudspeakers throughout the train in place of whatever ones of the other channels were coupled thereto. At the same time the automatic switching apparatus operates indicators in all of the private passenger compartments of the train and also at all of the microphone stations. Thus, the private passengers may switch to the announcement channel to hear the announcement and at the same time there is an indication at the other microphone stations that the announcement channel is in use.

It is contemplated in the present invention that the control apparatus shall be arranged with plug-in connections and that the major components contained within the control apparatus will also be of plug-in type. Thus, in the case of a car requiring only a single amplifier and speaker for group coverage, the control apparatus may have but a single relay and transformer plugged into appropriate sockets. This same control apparatus may also be employed in another car which contains facilities both for group listener coverage and private passenger compartment listener coverage. In this instance a plurality of relays and a plurality of transformers may be plugged into control apparatus to meet the additional requirements. In the event of apparatus breakdown, under these conditions, a controlling unit or a component thereof may be readily removed from one location and installed in another without necessitating changes in wiring or removal of electrical connections. In such a case, these changes may be efficiently accomplished by unskilled personnel.

It is further considered, in the instant invention, to incorporate in the control apparatus, means whereby train personnel may make a direct voice announcement over a program channel to advise the passengers as to the time of arrival at the next station, or as to the dining car services, etc. In the case of the group listeners the control apparatus is arranged to provide priority to these voice announcements whereby to disconnect the entertainment program material and

to apply the voice signals to the amplifier. With respect to the compartment listeners, a signal indicator will be actuated in the compartment and the listener may then selectively arrange for the reception of the voice announcement.

In the railroad passenger entertainment system embodying the present invention, in one specific form, a plurality of entertainment program signals are fed to program channels which comprise a plurality of metallic conductors extending throughout the full length of a train. As the program channels pass through each individual car, connection is made thereto through a control box circuit whereby program signals may be impressed upon various amplifiers contained within the car. At the extremities of each car, the program channels may be coupled to the next adjoining car, thus extending the program channels. The entertainment program signals are impressed upon the program channels in the form of audio signal energy which will then be conducted by the program channels through the entire length of a train.

For a better understanding of the invention together with other and further objects thereof, reference is made to the following description, taken in connection with the accompanying drawing, and its scope will be pointed out in the appended claims.

The single figure of the drawing is a circuit diagram of an illustrative embodiment of the invention.

Referring now to the drawing, there is illustrated a program distribution system embodying the control circuit of the present invention. The system is shown applied to a single railroad passenger car, such as a sleeper lounge, whereby program entertainment signals are available through a train line 4 and may be selectively disseminated through a control box 5, shown dotted, to a relatively large listener group by means of a group amplifier 6 and loudspeaker 7. The signals from the train line 4 are also to be distributed to a pair of private passenger compartments 8 and 9. Provisions are also included whereby train personnel, such as a conductor, dining car steward, or the like, may interrupt the entertainment signals applied to the group loudspeaker 7 and impress a voice announcement thereon, and at the same time the voice announcement is also made available at the other points throughout the entire system.

The train line 4 may have the entertainment signals applied thereto at a remote point, not shown, and is herein illustrated as a single car section having terminals at each end thereof whereby other train lines of adjacent cars may be appropriately coupled thereto to extend the program distribution through a relatively large series of cars.

The train line 4 consists of the conductors 12, 13, 14, 15 and 16, conductor 12 serving as a common return for the other conductors, whereas the individual conductors 13, 14, 15 and 16 each may separately be used for the dissemination of entertainment program signals such as semi-classical music, popular music, radio program, or voice announcements, respectively. For descriptive purposes, these individual conductors will hereinafter be referred to as train communication channels A, B, C and D respectively.

For the purpose of controlling the coupling of the train channels A, B, C and D to the group amplifier 6, and also to the compartments 8 and 9, the control box 5 is provided with a plurality

of controlling switches 19, 20, 21 and 22. The switches 20, 21 and 22, which are associated with the channels A, B, and C respectively, are employed to selectively extend these channels to the group amplifier 6. The switch 19 is an "off" switch, primarily adapted to discontinue the selective coupling of the train channels to the amplifier 6. The control box 5 is also provided with a plurality of channel relays 25, 26, 27 and 28 which are associated with a plurality of line coupling transformers 30, 31, 32 and 33, respectively. The transformers are arranged in the control circuit in a manner whereby program material may be constantly coupled from channels A, B, C, and D to the compartments 8 and 9 and, at the same time, the actuation of one of the control switches 20, 21 and 22 will selectively couple a channel to the group amplifier 6 and loudspeaker 7. For amplifying the signal distributed through the transformers to the compartments 8 and 9, there is provided a plurality of compartment amplifiers 35, 36, 37 and 38 which are arranged between the line coupling transformers 30, 31, 32 and 33 respectively and a compartment signal distribution line 40 which extends to the compartments 8 and 9 and constitutes a plurality of car sub-channels.

For selecting a particular sub-channel the compartment 8 is provided with a selector switch 41 and a loudspeaker 42. Similarly, the compartment 9 is provided with a selector switch 43, a loudspeaker 44 and a signal indicator 45. It will be apparent that the train channels A, B, C and D primarily distribute the entertainment program material through a plurality of cars, whereas the car sub-channels comprising the distribution line 40 are secondarily arranged within the confines of an individual car for signal distribution to private passenger compartments contained therein.

Referring now to the distribution of the channels A, B, C and D through the control box 5, it will be noted that the conductors 13, 14, 15 and 16 are connected to the lower windings of the line transformers 30, 31, 32 and 33 respectively. The upper windings of transformers 30, 31, 32 and 33 are connected to the input of amplifiers 35, 36, 37 and 38 respectively. The upper windings of these transformers also are connected respectively to pairs of fixed contacts of the channel relays 25, 26, 27 and 28. For example, the upper winding of transformer 30 is connected to contacts 47 and 48 of the channel relay 25. An associated pair of armatures, such as 49 and 50 of relay 25, are arranged on each relay to engage with the aforementioned fixed contacts, whereby signal energy may then be coupled from the upper winding of a transformer, such as 30, to the group amplifier 6.

The control switches 19, 20, 21 and 22 may conventionally be of the locking push-button type whereby the manual operation of switch 20, for example, causes a movable contact 53 to effect a steady engagement with a fixed contact 54 until either switch 19 or another control switch, such as switch 21, is operated to actuate a release bar 55 and thereby cause the release of the previously closed switch 20.

The control box 5 is thus adapted to provide for controlling circuits whereby three channels A, B and C may be selectively coupled to the group amplifier 6 and whereby the fourth channel, namely channel D, may be controlled from a microphone box 59 for conveying voice announcements. Facilities, to be described, are provided whereby channel D may take precedence over the entertainment channels A, B and C so as to be coupled to the amplifier 6 in their stead.

It is contemplated that the control box 5 is to be equipped with conventional plug-in terminal facilities, such as shown near amplifier 6 at terminal points 60 and 61, whereby external conductive wiring may be suitably connected thereto. This will permit the standardization of mounting and wiring arrangements in all cars so equipped, and provides for simplification of the control box replacement problem. This plug-in construction is further applied to the relays and the transformers which are generally identical in construction and operation, and are adapted to be inserted in, or removed from, the control box 5, whereby to provide for overall flexibility of servicing and maintenance and for instant interchangeability of component parts throughout an entire train. Thus, the control box 5 represents a removable unit having standard mounting provisions and containing components which may be easily installed or removed to suit the particular needs of the car in which it is installed.

Each of the three switch-operated controlling circuits in the control box 5 is adapted to function separately but not simultaneously to connect a single program channel to the group amplifier 6. At the same time, the control box circuit provides for each of the program channels A, B and C to be continuously coupled to the appropriate compartment amplifiers 30, 31 or 32 for constant impression of program material upon the car sub-channels consisting of the distribution line 40.

For power source purposes there is provided a pair of power source conductors 63 and 64, which may be connected to the conventional power line of the train, not shown, whereby energizing current may be furnished for the channel relays, amplifiers and signal indicators. It will be noted that the contacts of the controlling switches 20, 21 and 22 are arranged in a series circuit with the negatively polarized power conductor 63. The power conductor 63 is first connected to a movable contact 65 of the control switch 22. This contact 65 is normally in engagement with a fixed contact 66, whereby the conductor 63 is coupled to a movable contact 67 of the control switch 21. The movable contact 67 normally engages a fixed contact 68 which is connected to the movable contact 53 associated with the control switch 20. It will be obvious that this series circuit arrangement, in conjunction with the release bar 55, permits only one of the controlling switches to be operated at one time for the purpose of applying an energizing potential to the relays. The controlling switches 20, 21 and 22 are provided with fixed contacts 54, 70 and 71 which are connected respectively to the lower terminals of the windings of channel relays 25, 26 and 27. The upper terminals of these windings are connected through a fixed contact 72 and armature 73 of relay 28 to the power conductor 64 of positive polarity. It will be evident therefore, that with the channel relay 28 normally de-energized the closure of the controlling switches 20, 21 or 22 will impress an energizing potential upon the winding of the associated relay 25, 26 or 27. The energization of one of these relays, and the subsequent closure of its associated switching contacts, is adapted simultaneously to couple the associated channel A, B or C to the group amplifier 6, and also to apply energizing potential from the positive power con-

ductor 64 to the group amplifier 6. The energization of the amplifier 6 is accomplished by the channel relays 25, 26 and 27 by means of the engagement of an armature, such as armature 57 of relay 25 and a fixed contact, such as contact 56 of the same relay.

It will be noted that the negative power source terminal 63 is connected through the control box plug-in terminal 61 to the amplifier 6, whereas the positive power conductor 64 is applied to the amplifier 6 through the terminal 60, as described, when one of the channel relays is operated. The channel relays 26 and 27 are also arranged to function in a manner similar to relay 25 to energize the group amplifier 6.

For the purpose of impressing a voice announcement upon the group amplifier 6 and the compartment amplifier 38, there is provided the program channel D and associated apparatus consisting of the microphone box 59, the relay 28 and the line coupling transformer 33. The microphone box 59 contains a microphone 75, a microphone hook-switch 76, a microphone transformer 77 and a signal indicator 78. The microphone 75 is connected to one winding of the transformer 77, the other winding being coupled to the program channel D comprising the conductors 12 and 16. The microphone 75 is conveniently suspended from a hook-switch 76 whereby, upon removal, to cause disengagement between a pair of hook-switch contacts 78 and 79. The hook-switch contact 78 is connected to the power source conductor 64 whereby, when in engagement with switch contact 79, an energizing current will be applied to the lower terminal of the winding of relay 28. The energizing circuit is completed by the connection between the upper terminal of the winding and the power source conductor 63.

The relay 28 is provided with a pair of fixed contacts 81 and 82 which are connected to the upper winding of the line coupling transformer 33. Contacts 81 and 82 are adapted to be engaged by a pair of armatures 83 and 84 which are connected to the input of the group amplifier 6. By this means the voice signals from the program channel D may be impressed upon the group amplifier 6. There is also provided on the relay 28 an armature 73 which is connected to the positive power source conductor 64 for the purpose of controlling the connection of the power source to the relays 25, 26 and 27 of the control box 5, or to any other remotely located control boxes. This armature 73 also separately controls the energization of the group amplifier 6 and the signal indicators 45 and 78, together with other similar signal indicators which may be remotely located. Normally, the relay 28 is de-energized and the armature 73 is in engagement with the fixed contacts 72 and 87. A closed circuit then exists whereby energizing current may flow from the power source conductor 64 to the windings of the relays 25, 26 and 27.

At the same time, current may also flow through the fixed contact 87 to a conductor 88 which may be coupled to other group amplifiers for the energization thereof. The energization of the relay 28 will cause the armature 73 to disengage the fixed contacts 72 and 87 and to engage another pair of fixed contacts 89 and 90. The engagement of armature 73 and contact 89 provides a closed circuit whereby energizing current may flow from the power source conductor 64 through the terminal 60 to the group amplifier 6 thereby energizing this amplifier. The fixed contact 90 is connected to one terminal of each of the signal indicators 78 and 45, the other terminals of which are connected to the power source conductor 63. Thus, the engagement of armature 73 and the fixed contact 89 permits an energizing current to be applied from the power source terminals 63 and 64 to the signal indicators 78 and 45. A conductor pair 91 is arranged adjacent to the signal indicator 45 whereby connection may be made for energizing other signal indicators that may be required.

Facilities are also provided for the coupling of the program channels to other group amplifiers, if other group amplifiers are desired, by means of the terminal pair 93 shown adjacent to the group amplifier 6. As hereinbefore described, other group amplifiers may be energized by means of connection to the conductor 88 associated with the relay 28.

Reference now will be made to a typical operation of the control apparatus previously described. Assume that the operator wishes to impress upon the group amplifier 6 and the loudspeaker 7 the particular entertainment material which is distributed over the train program channel A comprising conductors 12 and 13. The operator manually closes the control switch 20, thereby operating the channel relay 25. By means of its switching contacts and described associated circuits, the power line conductors 63 and 64 are connected to the amplifier 6. Also, the coupling transformer 30 is connected to the input circuit of the amplifier. By this means there will be reproduced by the loudspeaker 7 the program material of channel A.

At the same time, assume that the passenger occupying the private compartment 9 has operated the selector switch 43 to the position shown. In this manner then, by means of the two lower conductors 40 of the car sub-channels, there will be reproduced by the loudspeaker 44 the program material being distributed over the train channel A.

Similarly, the occupant of compartment 8 may operate the selector switch 41 as shown, whereby to effect the reproduction by the loudspeaker 42 of the program material being distributed over the train channel C.

It will be evident that, while the program material which is reproduced by the group loudspeaker 7 is subject to the control of the manually operable switches 20, 21 and 22, the occupants of the private passenger compartments may selectively provide for the reproduction by means of the individual loudspeakers 42 and 44 of the program material distributed over any of the train channels independently of each other and also independently of the control switches for the group loudspeaker.

Referring now to the operation of the microphone control box 59, assume that one of the train crewmen wishes to make a voice announcement over the program distribution system. The microphone 75 is removed from the hook-switch 76, whereby to operate the relay 28. As described, the operation of this relay effects the release of relay 25, thereby disconnecting the group amplifier 6 and loudspeaker 7 from train channel A. In its stead, the relay 28 couples train channel D to the group amplifier and loudspeaker. At the same time the signal indicators, such as 45 and 78, are operated in all of the private passenger compartments and at all of the microphone stations throughout the train. The occupants of the private passenger compartments may, if they desire, operate their selector switches

to connect the individual loudspeakers to the train channel D in order to hear the announcement. Busy signals are given at all of the microphone stations indicating that train channel D is in use.

Following the completion of the voice announcement, the microphone 75 is replaced upon the hook-switch, thereby releasing relay 28 and effecting the re-operation of relay 25. The signal indicators, such as 45 and 78, are de-energized. In this manner the group apparatus is restored to its original condition. The passengers of the private compartments may operate their selector switches to any one of the other car sub-channels.

Whenever it is desired to reproduce the program material from any of the other train channels, an appropriate one of the manual switches such as 21, for example, is operated. By reason of the described mechanical interlocking of all of these switches the previously operated switch 20 is released. The operation of switch 21 effects the coupling of train channel B to the group amplifier 6 and loudspeaker 7. Whenever it is desired to terminate the reproduction of all program material by the group loudspeaker 7, the master switch 19 is operated. The mechanical interlocking of this switch with the others of the manually operable switches effects the release of whichever one of these switches may be operated.

While there has been described what is at present considered the preferred embodiment of the invention, it will be obvious to those skilled in the art that various changes and modifications may be made therein without departing from the invention, and it is, therefore, aimed in the appended claims to cover all such changes and modifications as fall within the true spirit and scope of the invention.

What is claimed is:

1. A program distribution system comprising, a first loud-speaker, a second loud-speaker, a plurality of communication channels having different program material impressed thereon, relay means selectively controllable for coupling said first loud-speaker to any of said channels, relay control switches operable one at a time to selectively control said relay means, whereby to effect the reproduction by said first loud-speaker of the program material on any of said channels, and means including a selector switch for coupling said second loud-speaker to any of said channels independently of the operation of said relay means.

2. A program distribution system comprising, a plurality of communication channels having different program material impressed thereon, a first loud-speaker, means including a relay for each of said channels operable to couple said first loud-speaker to said respective channels, a second loud-speaker, means including a selector switch to selectively couple said second loud-speaker to said channels independently of said first loud-speaker, and means including the relay for a predetermined one of said channels responsive to the operative conditioning of said predetermined channel for releasing any operated one of the others of said relays.

3. A program distribution system comprising, a plurality of communication channels having different program material impressed thereon, a group loudspeaker, an individual loudspeaker, means including a relay for each of said channels to couple said group loudspeaker selectively to said channels, means including a selector switch to couple said individual loudspeaker selectively to said channels independently of said group loudspeaker, and switch-controlled means for coupling said group loudspeaker to a predetermined one of said channels irrespective of the coupling effected by one of said relays.

4. A program distribution system comprising, a group loud-speaker, a plurality of individual loud-speakers, a plurality of communication channels having different program material impressed thereon, a relay for each of said channels, a coupling transformer for each of said channels and each having a primary winding connected to a different one of said channels and a secondary winding connected to the contacts of a different one of said relays, an individual amplifier for each of said channels connected to a different one of said secondary windings, a group amplifier connected to said group loud-speaker and the contacts of a different one of said relays, each of said relays, when operated serving to connect said group amplifier to one of said secondary transformer windings, a selector switch for each of said individual loud-speakers to connect said individual loud-speakers independently to any one of said individual amplifiers, and an operating switch for each of said relays.

5. A program distribution system for railroad passenger trains comprising, a plurality of train communication channels extending through and between cars of a train and having impressed respectively thereon different entertainment programs, a group loud-speaker located in a section of one of said cars accommodating a group of passengers, an individual loud-speaker located in a private passenger compartment of one of said cars, means for extending said train communication channels to said private compartment, means including a selector switch for coupling said individual loud-speaker selectively to any one of said extended train communication channels, relay means operable to couple said group loud-speaker to a selected one of said channels, a plurality of manually operated individual switches to control said relay means, whereby to effect the reproduction by said group loud-speaker of the program material on some of said channels, a microphone coupled to one of said train communication channels, a microphone switch to control said relay means, whereby to effect the reproduction by said group loud-speaker of the program material on said channel having the microphone coupled thereto, and means in said private passenger compartment and responsive to the operation of said microphone switch to indicate the busy condition of said channel having the microphone coupled thereto.

6. A program distribution system for railroad passenger trains comprising, a plurality of train communication channels extending through and between passenger cars of a train and having impressed respectively thereon different entertainment programs, means including a group loud-speaker located in each section of those of said cars accommodating a group of passengers and an individual loud-speaker located in each private passenger compartment of said cars for reproducing program material, means including a plurality of transformers coupled to said train communication channels for extending said train channels to said private passenger compartments, means including a selector switch to selectively couple each individual loud-speaker to said plu-

rality of extended channels, relay means operable to couple said transformers one at a time to said group loud-speaker, an operating switch for each of said relays, all but one of said switches being manually operable to effect the selective operation of all but an announcement channel one of said relays, a microphone located in one of said cars, means including a microphone operated one of said operating switches to operate said announcement channel relay, said announcemean channel relay when operated being effective to release any other one of said relays, and means in each of said private passenger compartments and at each microphone location and responsive to the operation of said announcement channel relay to indicate the busy condition of said train announcement channel.

7. A program distribution system for railroad passenger trains comprising, a plurality of train communication channels extending through and between some of the passenger cars of a train and having impressed respectively thereon different entertainment programs, means including a group loud-speaker located in each section of those of said cars accommodating a group of passengers for reproducing program material, means including an individual loud-speaker located in each private passenger compartment of said cars for reproducing program material, a plurality of car communication sub-channels extending to each of said private passenger compartments within a car, a plurality of transformers coupled respectively between said train communication channels and said car communication sub-channels, means including a selector switch to selectively couple each individual loud-speaker to said plurality of car communication sub-channels, means including a plurality of relays individually operable to couple said transformers respectively to said group loud-speaker, an operating switch for each of said relays but one, said one relay being associated with one of said train communication channels used exclusively for making announcements, said operating switches being interlocked so that the operation of any one of the switches effects the release of any previously operated switch and said operating switches being electrically interconnected so as to effect the selective operation of said relays, a microphone located in one of said cars, and coupled to said train announcement channel, means including a microphone switch to operate said announcement channel relay, said announcement channel relay when operated being effective to release any other one of said relays in all of said cars, and means in each of said private passenger compartments and at each microphone location and responsive to the operation of said announcement channel relay to indicate the busy condition of said train announcement channel.

8. A program distribution system for railroad passenger trains comprising, a plurality of train communication channels extending through and between the passenger cars of a train and having impressed respectively thereon different entertainment programs, a group loud-speaker located in each section of those of said cars accommodating a group of passengers, a group amplifier coupled to each of said group loud-speakers, an individual loud-speaker located in each private passenger compartment of said cars, a plurality of car communication sub-channels extending to each of said private passenger compartments within a car, a plurality of transformers and amplifiers coupled respectively between said train communication channels and said car communication sub-channels, means including a selector switch to couple each individual loud-speaker to any one of said plurality of car communication sub-channels to selectively reproduce the program on any of said train communication channels, a source of power, means including a relay associated with each of said train communication channels and individually operable to couple said train channels respectively to said group amplifier and to connect said power source to said amplifier, a plurality of operating switches associated respectively with all but one of said relays, said one relay being associated with one of said train communication channels used exclusively for making general announcements, said operating switches being mechanically interlocked so that the operation of any one of the switches effects the release of any previously operated switch and said operating switches being electrically interconnected between said power source and said respective relays to effect the selective operation of said relays, a disconnect button mechanically linked to said operating switches and operable to release any of said switches, a microphone located in certain ones of said cars, and coupled to said train announcement communication channel, means including a microphone switch coupled to said power source and operable to operate said announcement channel relay, said announcement channel relay when operated being effective to release any other one of said relays in all of said cars, and signal means in each of said private passenger compartments and at each microphone location and responsive to the operation of said announcement channel relay to indicate the busy condition of said train announcement communication channel.

9. A program distribution system for railroad passenger trains comprising, a plurality of train communication channels extending through and between the passenger cars of a train and having impressed respectively thereon different entertainment programs, a group loudspeaker located in each section of those of said cars accommodating a group of passengers, a group amplifier coupled to each of said group loudspeakers, an individual loudspeaker located in each private passenger compartment of said cars, a plurality of car communication sub-channels extending only to each of said private passenger compartments within a car, a plurality of transformers and amplifiers coupled respectively between said train communication channels and said car communication sub-channels, a multi-position switch coupled between each individual loudspeaker and said plurality of car communication sub-channels, a source of power, a relay associated with each of said train communication channels and individually operable to couple said transformers respectively to said group amplifier and to connect said power source to said amplifier, a plurality of operating switches associated respectively with all but one of said relays, said one relay being associated with one of said train communication channels used exclusively for making general announcements, said operating switches being mechanically interlocked so that the operation of any one of the switches effects the release of any previously operated switch and said operating switches being electrically interconnected between said power source and said respective relays to effect the operation of only one of said relays at a time, a push-button mechanically linked to said operating switches and op-

erable to release any of said switches, a microphone located in each of said cars and coupled to said train announcement communication channel, a microphone switch in circuit between said power source and said announcement channel relay and operable to operate said announcement channel relay, said announcement channel relay when operated being effective to release any other one of said relays in all of said cars, and an indicator in each of said private passenger compartments and at each microphone location and responsive to the operation of said announcement channel relay to indicate the busy condition of said train announcement communication channel.

10. A program distribution system for railroad passenger trains comprising, a plurality of train wire communication channels extending through and between the passenger cars of a train and having impressed respectively thereon different entertainment programs, a group loudspeaker located in each section of those of said cars accommodating a group of passengers, a group amplifier coupled to each of said group loudspeakers, an individual loudspeaker located in each private passenger compartment of said cars, a plurality of car wire communication sub-channels extending only to each of said private passenger compartments within a car, a plurality of transformers and amplifiers permanently coupled respectively between said train communication channels and said car communication sub-channels, a multi-position switch coupled between each individual loudspeaker and said plurality of car communication sub-channels, a source of power, a relay associated with each of said train communication channels and individually operable to couple said transformers respectively to said group amplifier and to connect said power source to said amplifier, a plurality of push-button switches associated respectively with all but one of said relays, said one relay being associated with one of said train communication channels used exclusively for making general announcements, said push-button switches being mechanically interlocked so that the operation of any one of the switches effects the release of any previously operated switch and said switches being electrically interconnected between said power source and said respective relays to effect the operation of only one of said relays at a time, a master push-button mechanically linked to said push-button switches and operable to release any of said switches, a microphone located in each of said cars, a transformer coupling said microphone to said train announcement communication channel, a microphone switch in circuit between said power source and said announcement channel relay and operable by manipulation of said microphone to operate said announcement channel relay, said announcement channel relay when operated being effective to release any other one of said relays in all of said cars, and an indicator in each of said private passenger compartments and at each microphone location and responsive to the operation of said announcement channel relay to indicate the busy condition of said train announcement communication channel.

LOUIS F. MAYLE.

REFERENCES CITED

The following references are of record in the file of this patent:

UNITED STATES PATENTS

Number	Name	Date
1,552,919	Gauthier	Sept. 8, 1925
Re. 16,231	Clement	Dec. 15, 1925
1,629,552	Strieby	May 24, 1927
1,632,012	Toomey	June 14, 1927