Dec. 20, 1927. 1,653,325

E. WATTS

SIGNAL DEVICE

Filed March 14, 1927

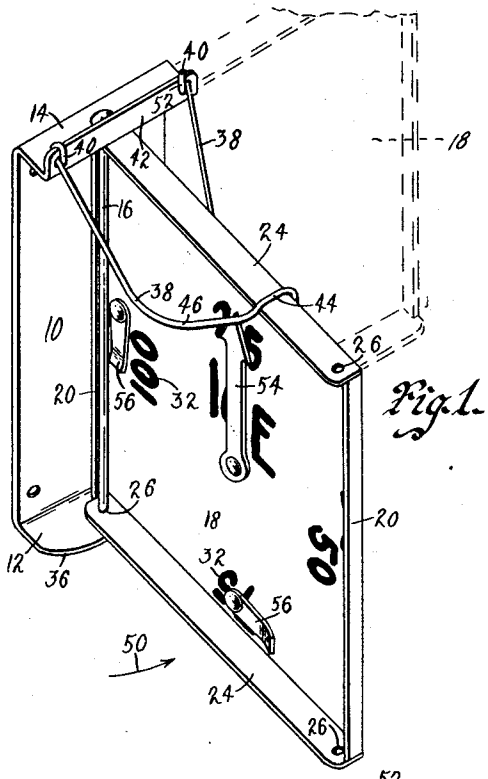

Fig. 1.

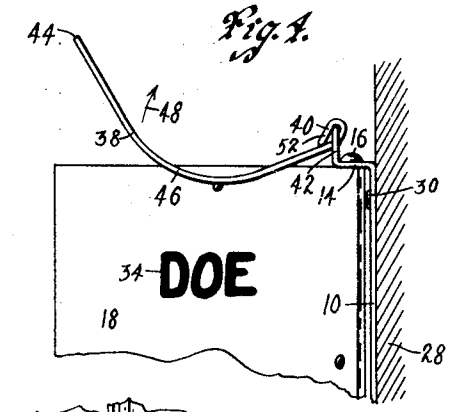

Fig. 4.

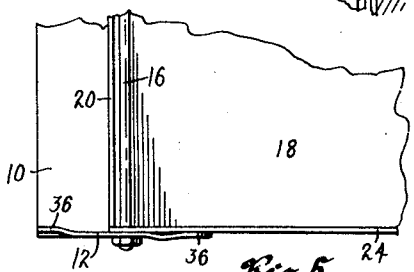

Fig. 5.

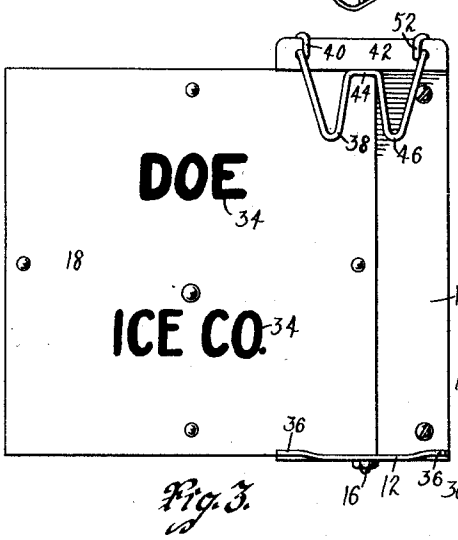

Fig. 3.

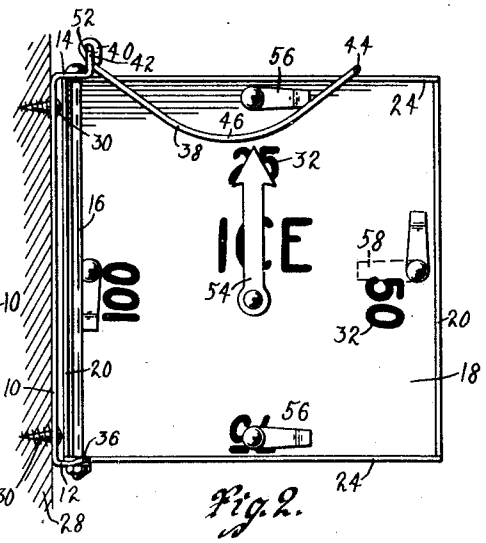

Fig. 2.

Witness
L. F. Landberg

Inventor
Earl Watts
by Bair & Freeman Attorneys

Patented Dec. 20, 1927. 1,653,325

UNITED STATES PATENT OFFICE.

EARL WATTS, OF WASHINGTON, IOWA.

SIGNAL DEVICE.

Application filed March 14, 1927. Serial No. 175,201.

The object of my invention is to provide a signal device of simple, durable and comparatively inexpensive construction.

A further object of my invention is to provide a convenient and easily operated signal device which can be attached to the side of a building or the like and which has a signal flag thereon adapted to be positioned against the side of the building in non-signaling position or to be swung to position at right angles to the building in a signaling position.

Still a further object is to provide a base for the signal device to which the signal flag is pivoted, there being means on the base for engaging the flag to hold it in the non-signaling position.

Still a further object is to provide means for locking the signal flag in signaling position.

Still a further object is to so design the locking device that it would be operated automatically when the signal flag is moved from non-signaling to signaling position.

Still a further object is to provide an indicating needle on the signal flag.

Still a further object is to provide clips on the signal flag whereby a signal card or the like can be positioned thereon.

With these and other objects in view, my invention consists in the construction, arrangement and combination of the various parts of my device, whereby the objects contemplated are attained, as hereinafter more fully set forth, pointed out in my claims and illustrated in the accompanying drawings, in which:

Figure 1 is a perspective view of my improved signal device.

Figure 2 is a side elevation of the same showing the base thereof attached to a wall or the like and the signal flag in signaling position.

Figure 3 is a front elevation of the device illustrating the signal flag in non-signaling position.

Figure 4 is a side elevation of the device illustrating the signal flag being moved from non-signaling to signaling position whereby it engages the locking device and swings it upwardly; and

Figure 5 is a front elevation of the device showing the signal flag being moved from non-signaling to signaling position, and in so doing, operating the means for maintaining the signal flag in non-signaling position.

On the accompanying drawing I have illustrated a device of the character described as used for signaling an ice man and indicating to him the quantity of ice desired. It is of course to be understood that any other data can be printed on the signal flag whereby the signal can be used for other purposes.

In the construction of my device I provide a base plate 10 having out-turned flanges 12 and 14. A pivot rod 16 extends through the flanges 12 and 14 and has mounted thereon a signal flag 18. The signal flag 18 has a pair of reinforcing flanges 20 and another pair of flanges 24 provided with openings 26 through which the pivot bolt 16 extends whereby the flag 18 is pivotally mounted relative to the base plate 10. It will be noted that the flanges 24 have openings 26 at each end whereby the signal flag 18 can have either end pivoted on the bolt 16, depending on whether the flag is to be swung to the left or right when in non-signaling position.

The base plate 10 may be secured to a wall 28 by screws 30 or some equivalent means. In non-signaling position the signal flag 18 is swung to position adjacent the wall 28 as clearly illustrated in Figure 3 of the drawings. In this position the indicating numerals 32 on the face of the signal flag 18 are hidden and an advertisement 34 or the like can be exposed if desired.

For maintaining the signal flag 18 in the position illustrated in Figure 3 I provide the flange 12 with up-turned corners 36 which engage the lower outer corner of the flag as clearly illustrated. When the signal flag 18 is moved from the non-signaling position to the signaling position the corner 36 is sprung downwardly as illustrated in Figure 5 of the drawings.

It is desirable in a device of this character to provide a locking means for the flag 18 when it is in signaling position. For this purpose I provide a wire 38 pivoted by eyes 40 to an up-turned portion 42 of the flange 14. The outer end of the wire is looped as at 44 for engaging the upper flange 24 of the signal flag 18 when the flag is in signaling position.

It will be noted that a portion of the wire 38 is bowed downwardly as at 46. The pur-

pose of this is so that when the flag 18 is moved from non-signaling position the upper flange 24 will engage the portion 46 of the wire and raise it as indicated by the arrow 48 in Figure 4 of the drawing. After the upper flange 24 has passed beneath the portion 46 of the wire, the wire will move downwardly due to gravity until the flag 18 is at right angles to the wall 28 in which position the loop 44 will engage the upper flange 24.

From the construction of the parts just described it will be obvious that the locking wire 38 will be automatically operated as the flag 18 is swung in the direction of the arrow 50. When it is desired to move the flag to non-signaling position the loop 44 is manually raised for releasing the locking wire 38.

To prevent the locking wire 38 from falling too far downwardly when the flag 18 is in non-signaling position the ends 52 of the wire are bent to engage the portion 42 of the flange 14 as clearly illustrated in Figure 2 of the drawing.

On the flag 18 I mount an indicating needle 54 which can be swung to either of the indicating numerals 32 for indicating for instance how many pounds of ice are desired. I also provide pivoted spring clips 56 which can be swung to the dotted line position 58 if a card containing other data is desired to be placed on the signal flag 18. The clips 56 will engage this card and hold it in position on the flag.

From the foregoing description it will be obvious that I have provided a signal device having a signal flag which is maintained in a non-signaling position without danger of being accidentally blown or otherwise moved to a signaling position. When it is desired to move the signal flag to signaling position it is merely necessary to swing it on its pivotal connection with the base plate 10 which automatically unlocks the signal flag from non-signaling position and operates the lock for holding the flag in signaling position.

It may here be mentioned that the signal flag 18 can be moved to another signaling position. Such position is illustrated in dotted lines in Figure 1 of the drawing. In such position the signal flag is parallel to the wall 28 and is maintained there by the corner 36 of the flange 12. The flag may be moved to either of the positions mentioned depending on which best presents the flag to the view of the person being signaled.

If it is desired to show the indicating numerals 32 in an opposite direction the signal flag 18 can be changed end for end whereby it is pivoted to swing in an opposite direction before hiding the indicating numerals.

Some changes may be made in the construction and arrangement of the parts of my device without departing from the real spirit and purpose of my invention and it is my intention to cover by my claims, any modified forms of structure or use of mechanical equivalents, which may be reasonably included within their scope.

I claim as my invention:

1. A signal device of the class described comprising a base adapted to be secured to a support, a signal flag pivoted thereto and adapted to assume an inoperative position against said support, locking means normally constrained toward locking position whereby it is raised by the signal flag upon pivotal movement thereof, said locking means coacting with the signal flag when in locking position for maintaining the said flag in a position at right angles to said support.

2. A signal device of the class described comprising a base adapted to be secured to a support, a signal flag pivoted thereto and adapted to assume an inoperative position against said support, means for normally maintaining the signal flag in such position, said means comprising a resilient projection on said base adapted to engage said signal flag, locking means operated by pivotal movement of the signal flag and coacting therewith for maintaining the signal flag in a position at right angles to said support.

3. A signal device of the class described comprising a base adapted to be secured to a support, a signal flag pivoted thereto and adapted to assume an inoperative position against said support, locking means operated by pivotal movement of the signal flag and coacting therewith for maintaining the signal flag in a position at right angles to said support, said locking means comprising a wire pivoted to said base and having a looped outer end, the portion of the wire between the pivotal connection and the looped end being bowed downwardly for being engaged by said signal flag as it is given pivotal movement.

4. A signal device of the character described comprising a base plate having flanges at each end, a signal flag pivoted between said flanges, one of said flanges having upturned corners adapted to engage the signal flag for holding it in non-signaling position.

5. A signal device of the character described comprising a base plate having flanges at each end, a signal flag pivoted between said flanges, one of said flanges having upturned corners adapted to engage the signal flag for holding it in non-signaling position, and a locking means for said signal flag comprising a wire pivoted to one of said flanges, extending outwardly therefrom and terminating in a looped portion adapted to engage said signal flag and hold it in signaling position, the portion of said wire between the pivotal connection thereof to the flange and said loop being bowed downwardly whereby it is engaged by said signal flag as it is being moved from non-signaling to

signaling position for automatically operating said locking means.

6. A signal device of the character described comprising a base plate having flanges at each end, a signal flag pivoted between said flanges, and a locking means for said signal flag comprising a wire pivoted to one of said flanges, extending outwardly therefrom and terminating in a looped portion adapted to engage said signal flag and hold it in signaling position, the portion of said wire between the pivotal connection thereof to the flange and said loop being bowed downwardly whereby it is engaged by said signal flag as it is being moved from non-signaling to signaling position for automatically operating said locking means.

Des Moines, Iowa, Feb. 26, 1927.

EARL WATTS.