# United States Patent [19]

**McCartney**

[11] **3,764,984**

[45] **Oct. 9, 1973**


[54] **INFORMATION CODING SYSTEM**


[75] Inventor: **James S. McCartney,** Roseville, Minn.

[73] Assignee: **George W. Benz,** St. Paul, Minn. ; a part interest



[22] Filed: **Jan. 28, 1972**

[21] Appl. No.: **221,695**

[52] **U.S. Cl.** ..... **340/168 S,** 340/412, 343/225

[51] **Int. Cl.** ..... **G08b 23/00**

[58] **Field of Search**..... 340/168 S, 412; 343/225



[56] **References Cited**

UNITED STATES PATENTS

| | | | |
|---|---|---|---|
| 2,934,678 | 4/1960 | Sibley | 340/168 S |
| 3,069,657 | 12/1962 | Green | 343/225 |
| 3,271,517 | 9/1966 | Rosa | 340/168 S |
| 3,271,680 | 9/1966 | Reynolds | 343/225 |
| 3,541,552 | 11/1970 | Carlson | 343/225 |
| 3,641,575 | 2/1972 | Auer | 343/225 |



*Primary Examiner*—Thomas B. Habecker
*Attorney*—Robert M. Dunning



[57] **ABSTRACT**

A multiple coding system in which a large number of different types of remote sensing units may be monitored by a single station, each sensing unit being identified by its unique code signal. The code signal is produced by generating a series of marker pulses in which only a predetermined combination of the pulses are followed by a code pulse. The monitoring station interprets the predetermined combination as a series of binary numbers identifing the sensing unit, decodes the binary numbers to decimal numbers, and displays the numbers on a panel.


**9 Claims, 2 Drawing Figures**

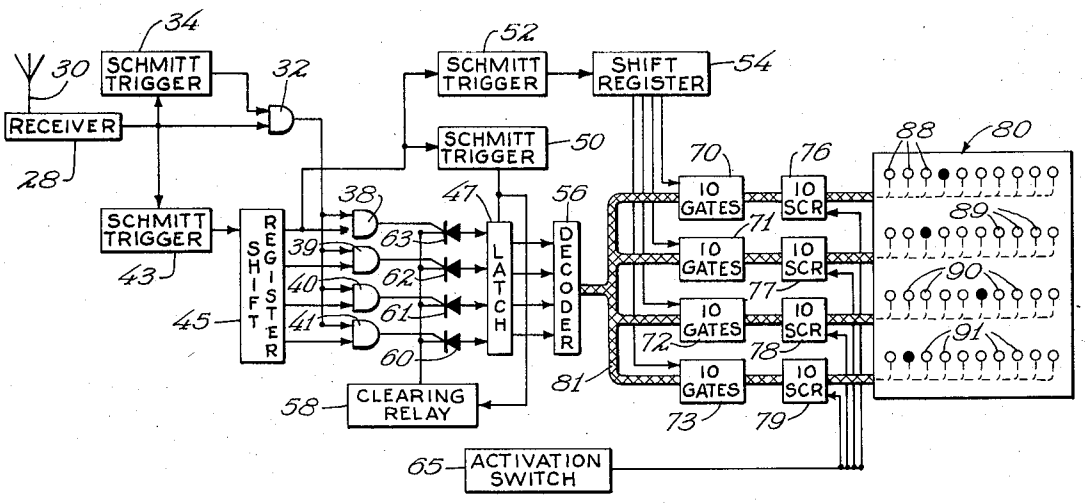

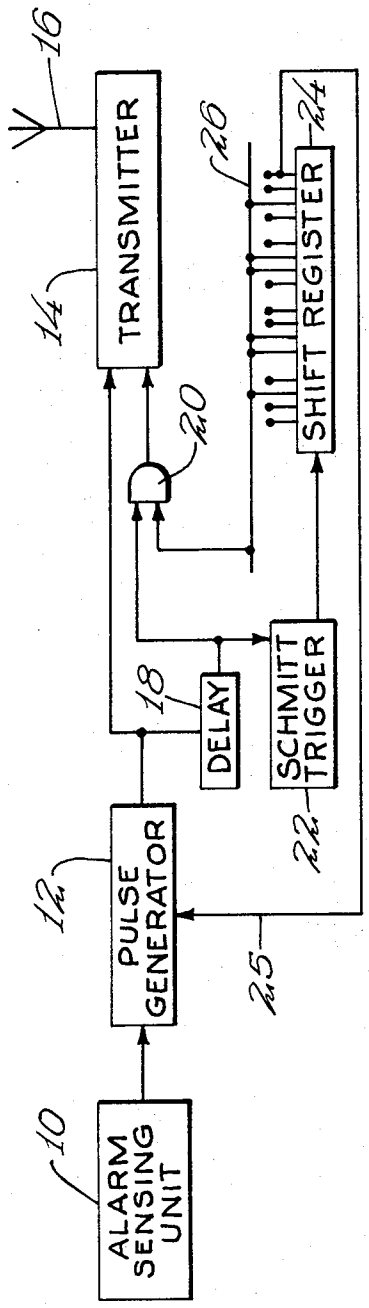
ALARM SENSING UNIT
PULSE GENERATOR
TRANSMITTER
DELAY
SCHMITT TRIGGER
SHIFT REGISTER
10
12
14
16
18
20
22
24
25
26

FIG. 1

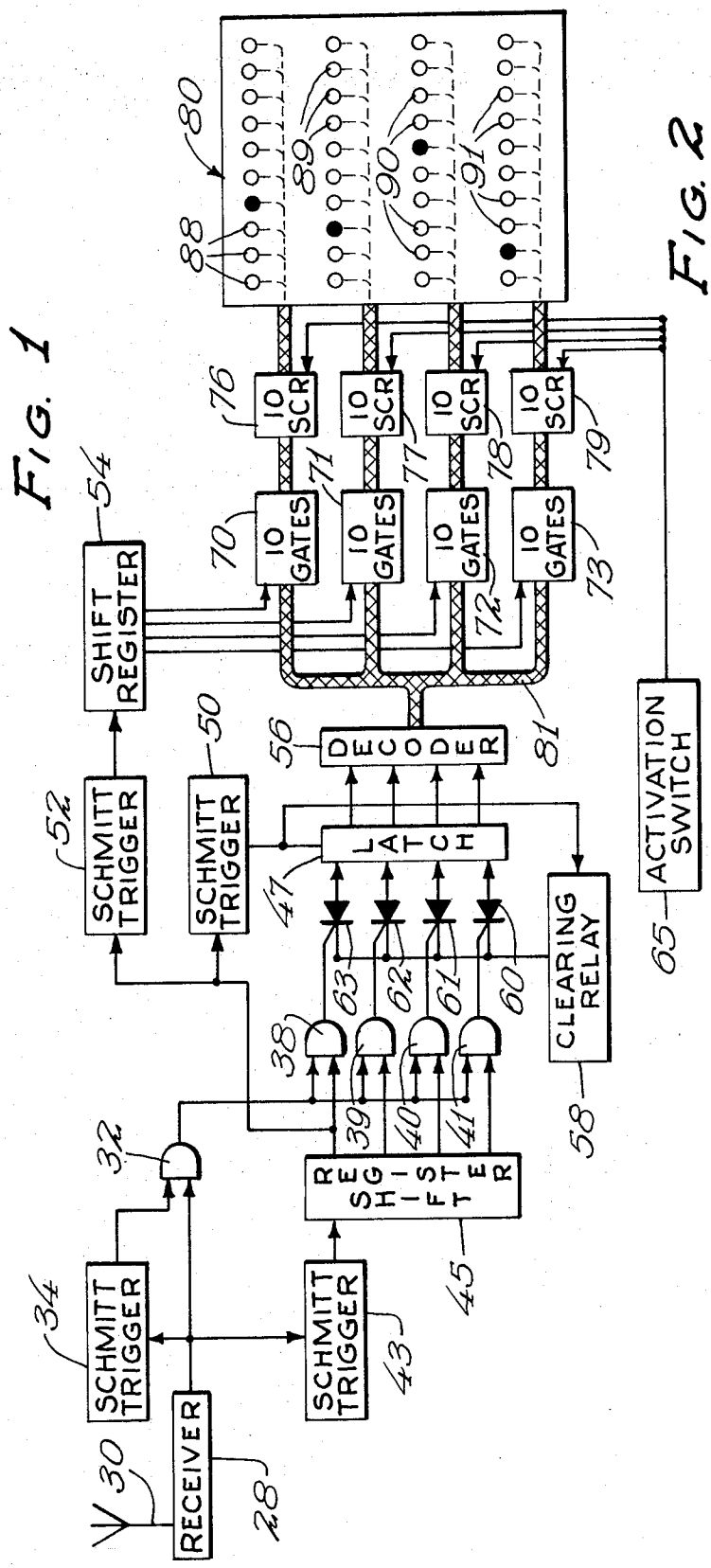
RECEIVER
SCHMITT TRIGGER
SCHMITT TRIGGER
SCHMITT TRIGGER
SCHMITT TRIGGER
SHIFT REGISTER
SHIFT REGISTER
10 GATES
10 GATES
10 GATES
10 GATES
10 SCR
10 SCR
10 SCR
10 SCR
DECODER
LATCH
CLEARING RELAY
ACTIVATION SWITCH
28
30
32
34
38
39
40
41
43
45
47
50
52
54
56
58
60
61
62
63
65
70
71
72
73
76
77
78
79
80
81
88
89
90
91

FIG. 2

# INFORMATION CODING SYSTEM

## BACKGROUND OF THE INVENTION

The first application of the present invention functions to permit a complete monitoring of a very large building or a group of buildings or even a complex like a shopping center by a single guard by providing a portable system wherein remote sensing devices can be positioned throughout a building in large numbers and connected to one or more monitoring and decoding stations. A unique coding arrangement enables the monitoring station to identify each remote sensing unit by location and type and as a consequence several varities of sensing units can be connected to monitor any desired condition. However, all of the units may be connected to the monitoring station by a single transmission means. This transmission means may comprise, for example, a radio link, a direct electrical wire connecting all of the remote sensing units, a flashing light laser, hydraulic or pneumatic connection. It is contemplated that hundreds of sensing units could be used in a large building to monitor such factors as temperature, by means of a thermostat, or unauthorized movement or entry by means of a thermostat, or unauthorized movement or entry by means of ultrasonic detection devices or movement on a television screen. Water levels, pressures, and overloaded electrical circuits are other examples of conditions that may be monitored. Furthermore, a completely unique code need not be devised for every single sensing unit since the method of coding used by my invention allows all the alarms of a particular type to be similarly coded except for minor differences in one portion of the code to identify the particular unit. Thus, my invention allows a single guard to keep track of detailed conditions throughout an extremely large building or complex with a minimum of electronic circuitry and connections.

## SUMMARY OF THE INVENTION

Briefly, in my invention the remote sensing units are connected to generate a series of spaced marker pulses when they are activated. These marker pulses can be transmitted by radio, direct wire or other means to the monitoring station or stations. Preferably all encoding units and decoding units are battery powered. The marker pulses are slightly delayed to form code pulses and these code pulses are gated to the transmission means by means of a shift register. However, the shift register is connected on only some of its outputs so that code pulses follow only some of the marker pulses in a predetermined combination. The particular combination of marker pulses followed by code pulses is unique for each sensing unit so that each sensing unit can be identified by the monitoring unit. Thus, each alarm unit is coded simply by making the correct connections from the shift register to the transmission means. It may be seen that it is an object of my invention to provide a simplified coding system for a large scale alarm and sensing system operable to monitor a great number of differing factors. Further objects and advantages will become apparent upon consideration of the following description and drawings.

## BRIEF DESCRIPTION OF THE DRAWINGS

FIG. 1 is a schematic diagram of the electronic circuitry of the sensing unit portion of my invention.



FIG. 2 is a schematic diagram of the electronic circuitry of the monitoring station showing how the coded pulses are analyzed to determine their exact source and the type of difficulty.

## DESCRIPTION OF THE PREFERRED EMBODIMENT

In FIG. 1 an alarm sensing unit **10** is shown which is designed to respond to whatever condition it is monitoring by switching on a pulse generator **12.** As mentioned before alarm sensing unit **10** may be a thermostat sensing temperature, or an intrusion detecting device using ultrasonic devices, or a door mounted switch, or any other suitable device for monitoring a variety of conditions of interest. Once activated, pulse generator **12** continues to generate a series of pulses which are relayed to a transmitter **14** and broadcast through an antenna **16.** Radio transmission is described in the preferred embodiment as an example only and it should be understood that the pulses could be relayed to the monitoring station of FIG. **2** by means of a direct electrical connection or other means.

The marker pulses are also directed to a delay circuit **18** to form code pulses. The code pulses are presented to a Schmitt trigger **22** and a gate **20.** Schmitt trigger **22** causes the shift register **24** to progress to each of its successive outputs as each pulse is received. However, not all of the outputs of the shift register **24** are connected to line **26** and to gate **20.** Consequently, only some of the code pulses from delay circuit **18** are allowed to pass through gate **20** to be transmitted by transmitter **14.** The particular marker pulses that are followed by code pulses are determined by whichever of the outputs of shift register **24** are connected to line **26.** A typical connection pattern is shown in FIG. **1.**

Shift register **24** has **16** outputs and for the purposes of the preferred embodiment they are divided into four groups of four outputs each. The first four outputs, on the left, are arbitrarily selected to represent in binary form the first digit of the floor number upon which alarm sensing unit **10** is located. The second group of four outputs is selected to represent the second digit of the floor number. The third group of four outputs may be connected to represent the type of sensing unit **10** to which it is connected while the last four units can be selected to represent which particular unit among those of that type is being activated.

In the first four groups of outputs only the third output is connected to line **26.** Using binary type coding the four outputs represent the numerals **1, 2, 4** and **8.** This means that the first digit of the floor upon which sensing unit **10** is located is **4.** In the second group of four outputs the first and second outputs are both connected which means that the second digit is a **3.** Thus, alarm sensing unit **10** is identified as being on the 43rd floor. In the third group of four outputs the second and third outputs are connected indicating that the sensing unit is the type of sensing unit identified by the number **6** which could be, for example, an open door switch to detect unauthorized entry. In the last group of four outputs from shift register **24** only the second output is connected indicating that the particular door which is being opened is the door designated number **2.** It is readily apparent that in the arrangement shown in the preferred embodiment 9,999 different alarm units could be identified by the same monitoring station. As shift register **24** reaches its last output a signal follows

a line **25** to pulse generator **12** to turn off the pulse generator since the coded signal is complete.

The coded signal from transmitter **14** is received by a radio receiver **28** and antenna **30.** The marker pulses from pulse generator **12** received by receiver **28** are presented to an AND gate **32.** The pulses are also delayed by a Schmitt trigger delay circuit **34** producing delayed pulses which are presented to AND gate **32.** Thus, if a particular marker pulse is followed by a code pulse, that code pulse is presented to gate **32** at the same time as its delayed marker pulse from Schmitt trigger **34.** The coincident arrival causes a pulse to be generated by AND gate **32** which opens four gates numbered **38** through **41.** As each of the marker pulses is received they are also presented by means of a Schmitt trigger **43** to a shift register **45** which moves from output to output in a fashion similar to shift register **24.** The output of tirgger **43** comprises prolonged pulses long enough to still be on when any code pulses are received so that trigger **43** ignores the code pulses. Thus, as the first four marker pulses are received, gates **38** through **41** are sequentially opened to pass any pulses from gate **32** indicating that a code pulse was transmitted. Thus, one or more electronic switches, which could comprise silicon controlled rectifiers numbered **60** through **63** are turned on indicating the particular completed connections in the first four outputs of shift register **24** in FIG. **1.** In FIG. **2** when shift register **45** reaches its fourth output that signal is also presented to a pair of Schmitt triggers **50** and **52.** Schmitt trigger **50** signals a latching circuit **47** to pass the information from the four SCR circuits to a binary to decimal decoder **56.** At the same time Schmitt trigger **50** also causes a clearing relay **58** to cut the power to the four SCR circuits **60** through **63** so as to erase the information stored from the first four pulses. Shift register **45** is then free to recycle four outputs from shift register **24** in FIG. **1.** At the end of the second scan decoder **56** again analyzes the four outputs from latch circuit **47** and decodes them into decimal form. The scan is repeated twice more to accommodate the remaining eight marker pulses from shift register **24.**

Decoder **56** is connected by means of a cable **81** to four groups of **10** gates each numbered **70** through **73.** In the binary system four outputs could represent a number as high as **16** but in the embodiment shown only ten decimal positions are needed. The number represented by the first four pulses, which in this case is **4,** is presented through cable **81** to the fourth gate in each of the groups of ten gates **70** through **73** which gate is connected through an electronic switch or SCR circuit to the fourth light bulb in each row of lights **88, 89, 90** and **91** on a display panel **80.** In this case only the particular fourth gate in the group of ten gates **70** will be opened because, for the first four pulses from shift register **24,** shift register **54** is activating only gates **70.** After shift register **45** completes its scan and activates Schmitt trigger **52** shift register **54** advances to the next output which deactivates the group of gates **70** and activates the group of gates **71.** Information can now pass only through the second group of SCR's **77** to the second row of lights **89** on board **80.** When shift register **45** again completes its scan corresponding to the second group of four outputs from shift register **24,** Schmitt trigger **52** again advances shift register **54** to the next output and opens the group of ten gates designated **72** in FIG. **2.**



The signals from the groups of gates **70** through **73** is transferred to board **80** and the groups of lights thereon through electronic switches or silicon control rectifiers numbered **76** through **79.** The SCR circuits remain on once activated so that the code is held on display board **80** for as long as the guard monitoring the station needs the information. As can be seen the first group of ten lights **88** are controlled by another group of ten electronic switches which comprise in the preferred embodiment ten SCR's **76.** Following the example described already the fourth light is lit. In the second group of lights **89** controlled by SCR's **77** the third light is lit. Thus the guard may easily read that the alarm unit is on the 43rd floor as described with respect to FIG. **1.** The group of lights **90** on board **80** controlled by SCR's **78** tell the guard that the number six type of alarm is involved, corresponding to an unauthorized entry while the number two light in the group of lights **91** indicate that it is the second door on the 43rd floor which is open. Once the guard has determined this information he may cause an inspection to be made to determine the cause of the triggering of the alarm sensing unit **10.** He may then clear the system by means of an activation switch **65** which is connected to the silicon controlled rectifier circuits **76** through **79** so as to turn off the SCR circuits and again blank the board **80** so that the system is ready to receive future alarm signals.

I claim:

**1.** A coding system comprising in combination:

remote condition sensing switch means;

marker pulse generating means connected to and operable to be activated by said condition sensing means;

coded shiftable gating means;

first delay means connected between said marker pulse generating means and said coded shiftable gating means operable to pass with some delay the pulses to said coded gating means, said coding means connected to pass at least some of the pulses from said generating means in a predetermined coded sequence;

a monitoring station;

transmission means between said gating means and said monitoring station so as to transmit the pulses therebetween;

analyzing means in said monitoring station operable to determine which of the marker pulses is followed by a delayed pulse; and

decoding means in said monitoring station connected to said analyzing means and operable to display in an understandable form the particular remote condition sensing means which is activated.

**2.** The system of claim **1** in which said coded shiftable gating means comprises a gate activated by some of the outputs of a shift register said shift register being advanced by the delayed pulses from said first delay means.

**3.** The system of claim **2** in which said analyzing means comprises a coincident pulse operable gate connected to receive marker pulses from said transmission means directly and through a second delay means.

**4.** The system of claim **3** including a second shift register advanced by marker pulses from said transmission means and operable to open a series of gates to pass pulses from said coincident pulse operable gate so as to activate a series of electronic switches.

5. The system of claim 4 in which said decoding means comprises trigger circuit means operable to pass the outputs of said electronic switches to a binary to decimal decoder at the end of the scan of said second shift register over said series of gates.

6. The system of claim 5 including further a display panel having indicator means thereon connected to said decoder to show the decoded number represented by the outputs of said electronic switches.

7. The system of claim 6 including second trigger means connected to said second shift register and to a third shift register to advance said third shift register,



said third shift register changing the output of said decoder to different indicator means on said display panel upon the completion of each scan by said second shift register.

8. The system of claim 7 in which said transmission means comprises radio transmitter and receivers.

9. The system of claim 7 in which said indicator means comprises lights controlled by electronic switches which are in turn activated by gates controlled by said decoder.

* * * * *