P. M. WEGE.

DESK.

APPLICATION FILED MAR. 25, 1915.

1,251,720.

Patented Jan. 1, 1918.

3 SHEETS—SHEET 1.

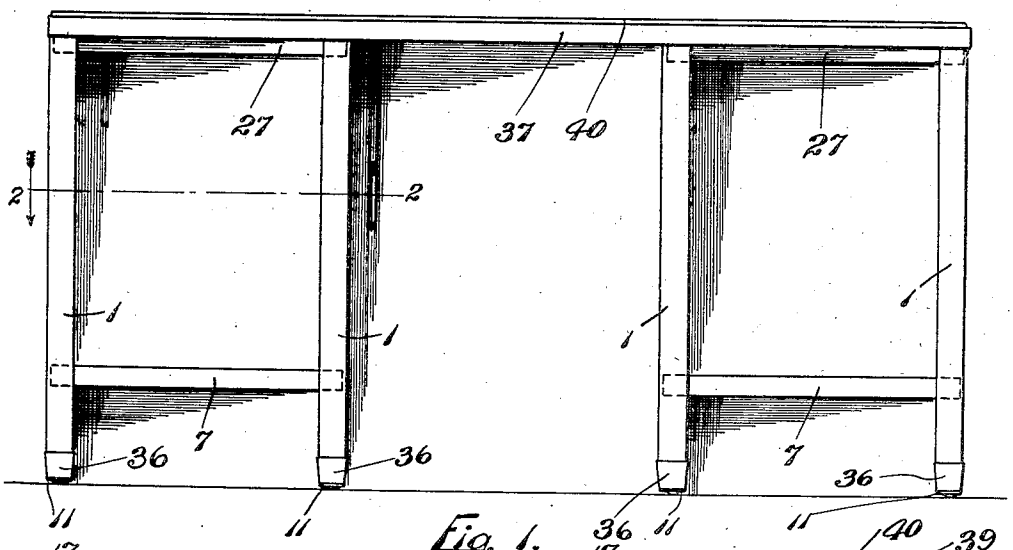

Fig. 1.

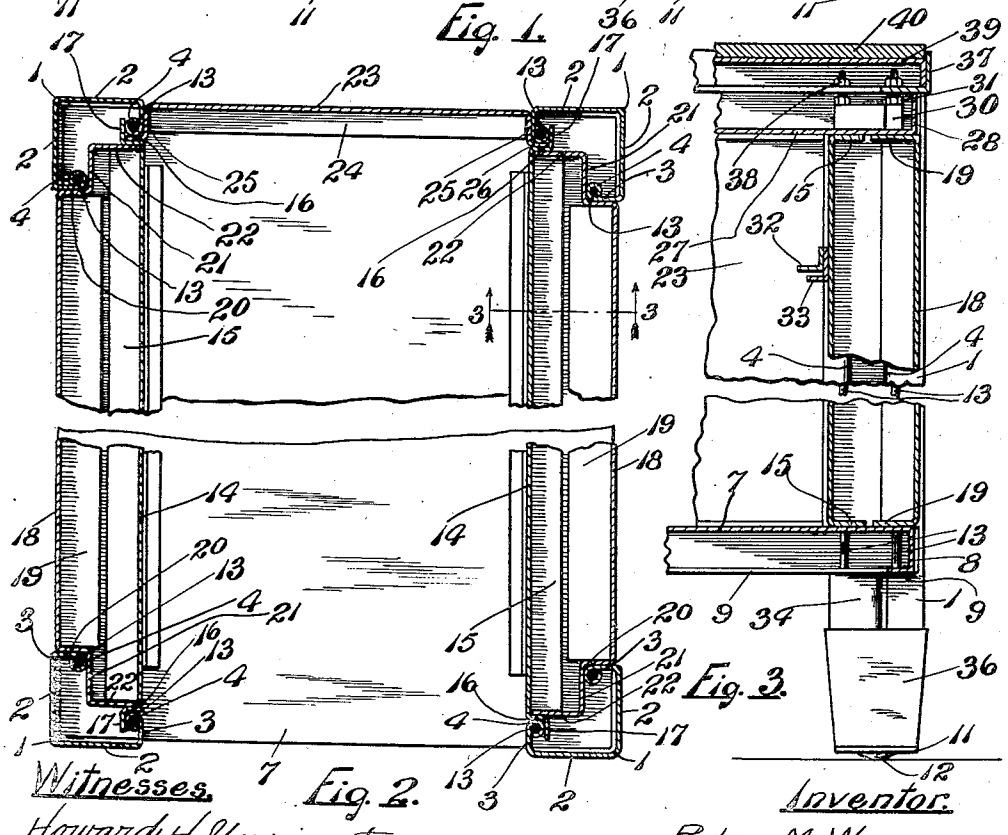

Fig. 3.

Fig. 2.

Witnesses.

Howard H. Yarrington

Mae Rankin

Inventor.

Peter M. Wege.

By Moulton & Livernace

Attorneys.

P. M. WEGE.

DESK.

APPLICATION FILED MAR. 25, 1915.

1,251,720. Patented Jan. 1, 1918.

3 SHEETS—SHEET 2.

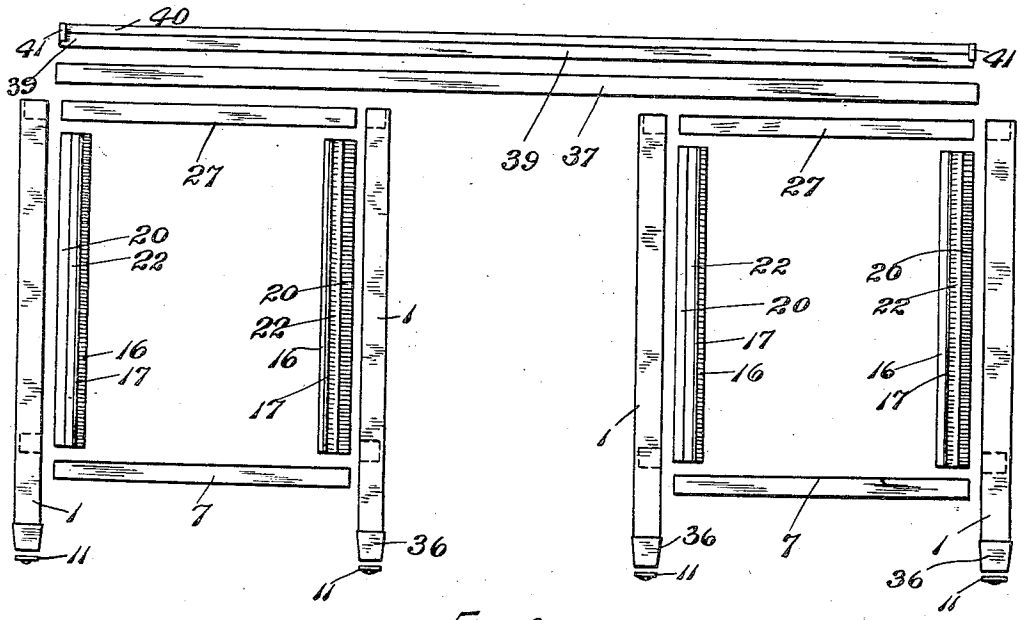

Fig. 4.

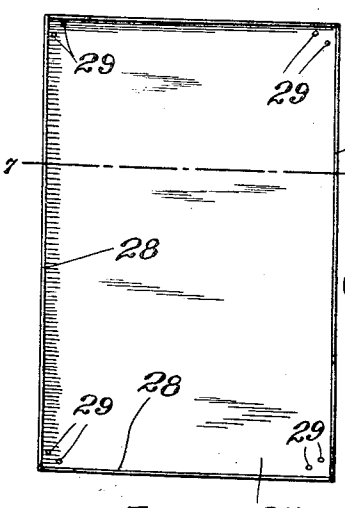

Fig. 5.

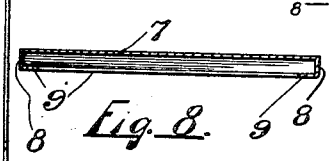

Fig. 8.

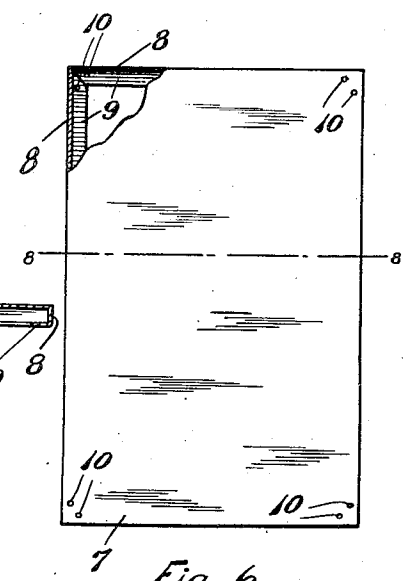

Fig. 6.

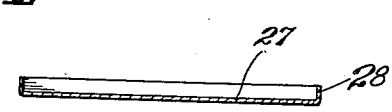

Fig. 7.

Witnesses

Howard H. Yarrington

Mae Rankin

Inventor

Peter M. Wege.

By Moulton & Livrance

Attorneys.

P. M. WEGE.

DESK.

APPLICATION FILED MAR. 25, 1915.

1,251,720.

Patented Jan. 1, 1918.

3 SHEETS—SHEET 3.

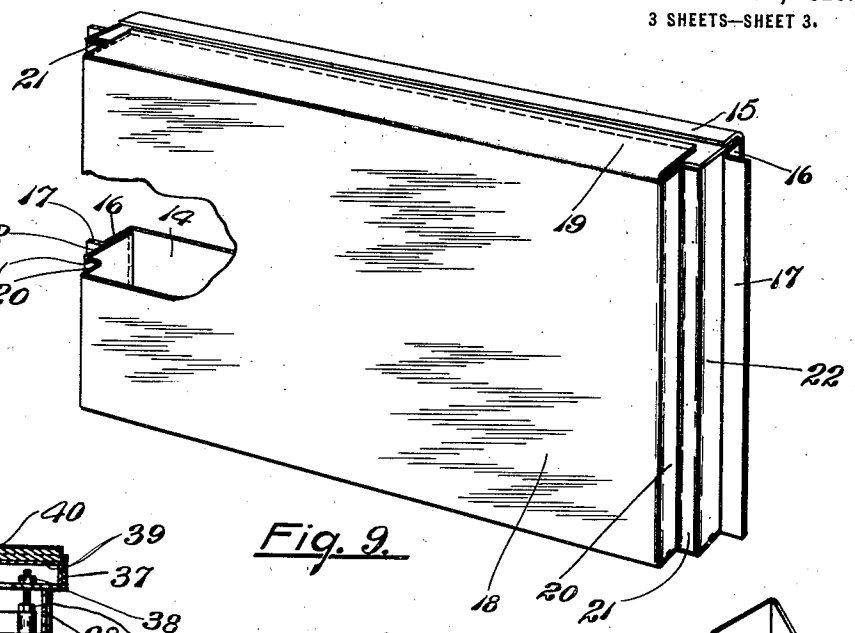

Fig. 9.

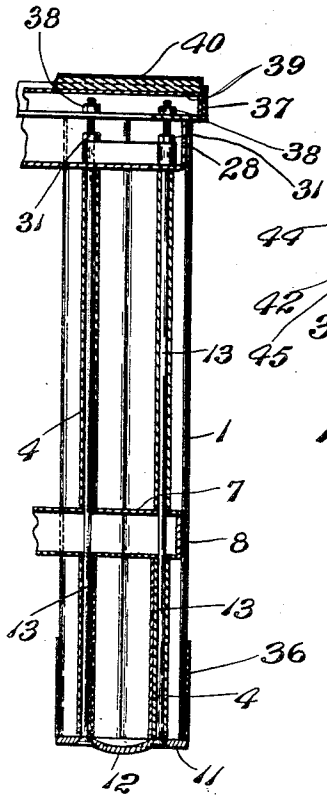

Fig. 10.

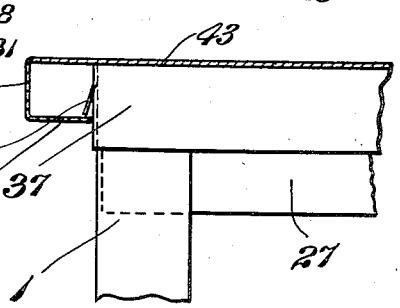

Fig. 13.

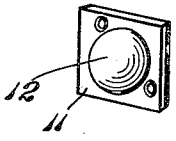

Fig. 12.

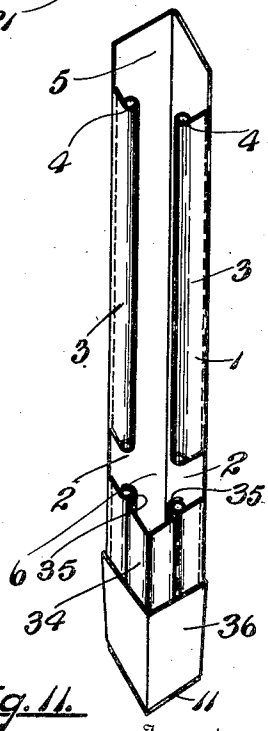

Fig. 11.

Witnesses

Howard H. Garrington

Mae Pauline

Inventor

Peter M. Wege

By Moulton & Livingston.

Attorneys.

UNITED STATES PATENT OFFICE.

PETER M. WEGE, OF GRAND RAPIDS, MICHIGAN, ASSIGNOR TO METAL OFFICE FURNITURE COMPANY, OF GRAND RAPIDS, MICHIGAN.

DESK.

1,251,720. Specification of Letters Patent. Patented Jan. 1, 1918.

Application filed March 25, 1915. Serial No. 17,017.

To all whom it may concern:

Be it known that I, PETER M. WEGE, a citizen of the United States of America, residing at Grand Rapids, in the county of Kent and State of Michigan, have invented certain new and useful Improvements in Desks; and I do hereby declare the following to be a full, clear, and exact description of the invention, such as will enable others skilled in the art to which it appertains to make and use the same.

This invention relates to desks and has especial reference to desks formed entirely of metal. It is the object and purpose of the invention to provide a construction of desks in which the posts, top, back and inner and outer panels of the desk pedestals may be formed separately and thereafter joined together and secured in position to form a rigid and solid desk construction. A further object of the invention is to form the desk of separable parts so that should any part become worn and useless or bent or disfigured it may be readily removed and replaced by a new part, this being valuable in case of damage to any part during transportation. Various other objects and purposes together with novel construction for attaining the same will appear as understanding is had of the embodiment shown in the accompanying drawings, in which:

Figure 1 is a front elevation of the assembled desk, the drawers thereof being removed from the desk pedestals.

Fig. 2 is a horizontal section taken through one of the desk pedestals on the line 2—2 of Fig. 1 looking in the direction indicated.

Fig. 3 is a vertical section on the line 3—3 of Fig. 2.

Fig. 4 shows in front elevation the parts disassembled which are to make up the complete desk.

Fig. 5 is a plan view of the upper shelf used in each desk pedestal.

Fig. 6 is a similar view, with a portion of one corner broken away, of the lower shelf.

Figs. 7 and 8 are, respectively, vertical sections taken on the lines 7—7 and 8—8 of Figs. 5 and 6.

Fig. 9 is a perspective view of a side of one of the desk pedestals.

Fig. 10 is a fragmentary vertical section through one corner of the desk showing the connecting rods used to secure the separable parts in rigid relation to each other.

Fig. 11 is a perspective view of one of the posts.

Fig. 12 is a perspective view of a cap applied at the lower end of each post; and

Fig. 13 is a fragmentary front elevation and partial sectional view showing one method of applying a top to the desk.

Like reference characters refer to like parts throughout the several views of the drawings.

In the construction of the desk the two pedestals are assembled separately and in like manner so that a description of the construction and assembly of one will suffice for both. At the four corners of a pedestal posts 1 are situated. Each post is formed of sheet metal and has sides extending at right angles to each other from the outer edges of which project sections 3 at right angles to sides 2 which at their free edges are turned to form a substantially cylindrical loop 4 extending lengthwise of the post, which loops as best shown in Fig. 11 are spaced a distance apart. Adjacent the upper end of each post a part of each section 3 is removed leaving the upper ends of the sides 2 extended a distance above sections 3 as shown at 5 while between the upper and lower ends of the post portions of the sections 3 are removed forming a notch 6 on the inner sides of a post as shown in Fig. 11.

A lower shelf 7 has turned down edges 8 at its sides and ends, which edges are again turned inwardly as indicated at 9. The shelf, at its corners, enters into the notches 6 of the four posts 1 used in constructing a desk pedestal and openings 10 are formed at the corners of the upper side of the shelf 7 as shown and also through the inturned edges 9, which openings when the corners of the shelf are located in the notches 6 are in alinement with the openings through the cylindrical loops 4 of the post. A cap 11 having a central depressed portion 12 is applied at the lower end of each leg 1 and headed rods 13 pass through openings in the cap, thence through the loops 4, and openings 10 in the shelf 7, the upper ends of the rods extending above the upper ends of the posts.

Between the front and rear posts 1 at each side of the pedestal, side members are posi-

tioned each including an inner panel 14 having sections 15 turned outwardly at right angles at its upper and lower edges, and angular extensions 16 at its front and rear edges turned inwardly a short distance and then turned parallel to the panel 14 as shown at 17. This inner panel is adapted to be received between two of the loops 4 as shown in Fig. 2, the loops fitting in the angle formed between parts 16 and 17. When in place the lower inner extension 15 rests upon the upper face of shelf 7. The outer panel 13 also has upper and lower inwardly turned extensions 19 while at each end the panel is turned inwardly for a distance as shown at 20, thence parallel to the side 18 as indicated at 21, and finally again turned inwardly as shown at 22. When applied to the construction, sections 20 bear against the sections 3 of post 1 as shown in Fig. 2 and the loops 4 lie in the angle between parts 20 and 21 while the free end 22 lies on the inner sides of the sections 16 of the inner panel 14. A side thus constructed is readily assembled by merely introducing the panels from above the posts and forcing them downwardly into position.

After the sides have been completed the back is placed in position. The back consists of a panel 23 having upper and lower forward angular extensions 24 and at each end inwardly turned sections 25 which after extending forward a short distance turn outwardly at right angles thereto as shown at 26; and the panel is applied to the construction by forcing said sections 26 between loops 4 and the sections 16 of the inner panel 14. The pedestal is completed by the addition of the upper shelf 27 which is shaped as a pan, the bottom having upturned edges 28 around all sides. Openings 29, two in number are formed in each corner of the upper shelf through which the rods 13 extend when the upper shelf is in place, said shelf resting on the inturned sections 15 and 19 of the panels 14 and 18 heretofore described. A spacing member or washer 30 is located around each pair of rods 13, and nuts 31 threaded on to the upper ends of the rods secure all the parts in fixed relation to each other making a complete desk pedestal. The drawer guides are attached on the inner panels 14 as shown consisting of angles 32 and 33 positioned horizontally and secured in any suitable manner to said panels, the upper angle 32 lying over angle 33 and having its horizontal leg spaced a short distance from the similar leg of angle 33. To finish the posts 1 below the lower shelf 7 a member 34 formed of sheet metal having sides lying substantially at right angles to each other is positioned at the open space between the loops 4 and is provided with curved extensions 35 turned around said loops while a sleeve 36 may, if desired, be located over the lower portion of each post to finish and add to the appearance thereof.

To complete the desk two pedestals constructed in the manner heretofore described are taken and spaced a distance apart and a frame 37 formed from angle iron is laid above the pedestal. The horizontal legs of the angle iron are provided with openings through which the upper ends of all the rods 13 extend. Nuts 38 threaded on to said rods connect the angle frame rigidly to and in position above the pedestals spacing them apart the desired distance. An inverted sheet metal pan 39 carrying on its upper side a finishing strip or mat 40, which is secured to the pan at the corners by suitable clips 41, is forced into the angle frame 37 thereby completing the top of the desk and giving it the proper finish required. The member 40 may be made of any suitable material such as linoleum or the like and if desired, glass, wood or any other suitable desk top may be secured to the pan 39, as will be evident.

Instead of the top constructed as shown in Figs. 3, 4 and 10 a metal top may be provided consisting of a plate 43 having outer dimensions slightly larger than the outside angle frame 37, said plate at its edges being turned down as shown at 44 for a distance and then inwardly for a short distance as shown at 45. Locking lugs 42 struck out at a plurality of places from the vertical legs of the angle frame 37 serve to retain this top in place as shown in Fig. 13 and the top may be readily applied by placing it above the angle frame and forcing it downwardly until the inturned portions 45 seat below said lugs 42.

A desk constructed in this manner may be made at a comparatively low cost of manufacture and may be assembled with ease and rapidity. It is constructed entirely of metal and is of great durability. Various changes in construction of detail may be resorted to without departing from the invention and I therefore claim all modifications of structure falling within the scope of the appended claims.

I claim:—

1. In a desk, the combination of desk pedestals spaced apart, an angle iron frame with vertical legs extending upwardly from the outer edges of the horizontal legs of the frame and located above the pedestals, a top disposed within said frame, and means for detachably connecting the pedestals, frame and top together, substantially as described.

2. In a desk, the combination of two desk pedestals, spaced apart, rods extending upwardly from the pedestals, an angle iron frame positioned above and over the pedestals, said frame having horizontal legs provided with openings through which the rods pass and vertical legs extending upwardly at the outer edges of said horizontal legs,

means on the rods for detachably securing the frame in place, and a top removably connected to said frame within said vertical legs, substantially as described.

3. In a desk, a desk pedestal comprised of posts, each formed of sheet metal and including vertical cylindrical loops having portions thereof removed at the upper end and intermediate the ends of the post, shelves supported by the posts with parts of the shelves received in the spaces provided by said removed portions, and rods extending lengthwise of the posts through the cylindrical loops and through the shelves to detachably connect the posts and shelves together.

4. In a desk, two desk pedestals located a distance apart, each comprised of posts formed of sheet metal and including vertical cylindrical loops having portions thereof removed at the upper ends and intermediate the ends of the posts, shelves supported by the posts with parts of the shelves received in the spaces provided by said removed portions, rods extending lengthwise of the posts through the cylindrical loops and through the shelves to detachably connect the posts and shelves together, an angle iron frame positioned above the said pedestals through which the upper ends of the rods pass, means on the rods for securing the frame to the pedestals, and a top carried by the frame, substantially as described.

5. A desk pedestal including posts, each formed of sheet metal having sides lying at right angles to each other, said sides being provided with extensions terminating in vertical loops, shelves supported at the upper ends and between the ends of the posts, portions of the said sections being removed to receive the shelves, and rods extending through the loops and shelves for securing the posts and shelves together, substantially as described.

6. In a desk, two spaced apart pedestals each comprised of corner posts, upper and lower shelves, sides each including an inner and an outer panel, and a back, an angle frame positioned above and bridging the space between the pedestals, means to detachably connect the parts of each pedestal together, and means to detachably connect the angle frame to the said pedestal connecting means, substantially as described.

7. In a desk, a pedestal comprised of corner posts, each formed of sheet metal and having sides lying at right angles to each other, said sides being provided with extensions terminating in vertically positioned loops, upper and lower shelves carried by the posts, sides each including an inner and an outer panel interposed between the front and rear posts, a back and rods extending through the loops of said posts to detachably connect the parts of the pedestal together, substantially as described.

8. In a desk, a pedestal comprised of sheet metal corner posts, upper and lower shelves formed of sheet metal, sides each including a sheet metal inner panel and a sheet metal outer panel, and a sheet metal back, means on the panels and back for interlocking them between the posts, and a single means for detachably connecting the shelves, posts, panels and back together.

In testimony whereof I affix my signature in presence of two witnesses.

PETER M. WEGE.

Witnesses:
FRANK E. LIVERANCE, Jr.,
HOWARD H. YARRINGTON.