S. L. AARONS.

SIGN.

APPLICATION FILED MAY 4, 1908.

914,777. Patented Mar. 9, 1909.

FIG. 1.

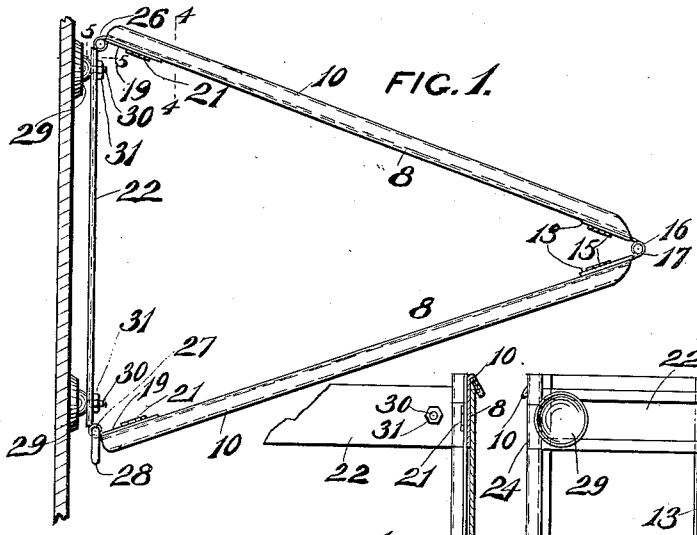

FIG. 3.

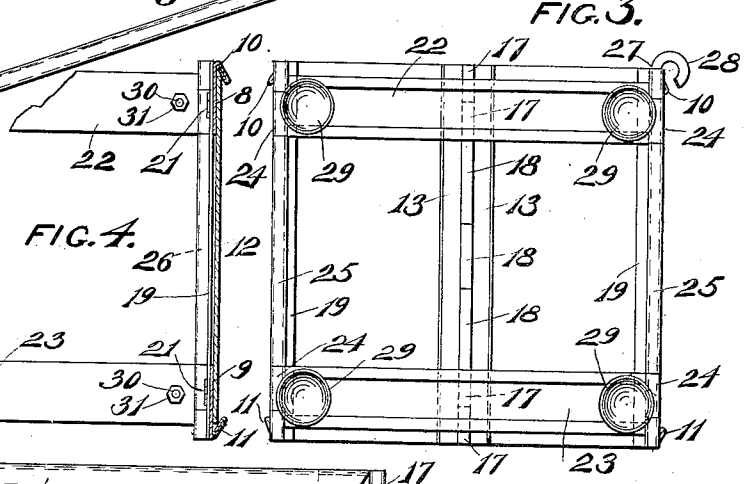

FIG. 4.

FIG. 2.

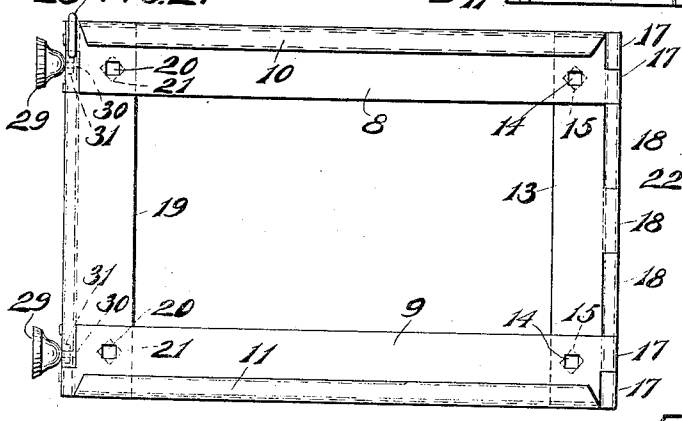

FIG. 5.

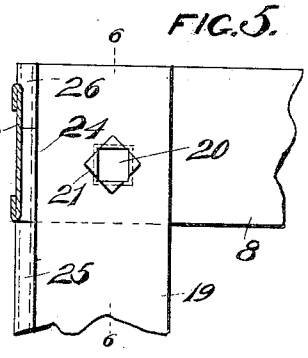

FIG. 7.

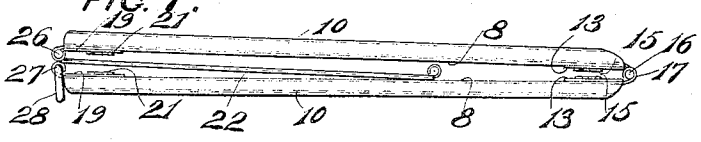

FIG. 6

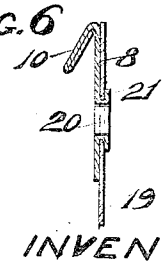

WITNESSES.

R. C. Theuer

Anna F. Schmidtbauer

INVENTOR.

Samuel L. Aarons.

By Benedict, Morsell & Caldwell

ATTORNEYS.

UNITED STATES PATENT OFFICE.

SAMUEL L. AARONS, OF MILWAUKEE, WISCONSIN.

SIGN.

No. 914,777. Specification of Letters Patent. Patented March 9, 1909.

Application filed May 4, 1908. Serial No. 430,887.

To all whom it may concern:

Be it known that I, SAMUEL L. AARONS, residing in Milwaukee, in the county of Milwaukee and State of Wisconsin, have invented new and useful Improvements in Signs, of which the following is a description, reference being had to the accompanying drawings, which are a part of this specification.

My invention has relation to improvements in signs and has particular reference to a form of sign wherein the frame thereof is adapted to be detachably held in engagement with a pane of glass or other support to provide for the ready attachment and detachment of the sign, without the necessity of separate fastening means.

The object of the invention resides in the particular construction of the frame of the sign whereby when not in use provision is made for the convenient folding of the different portions of the frame together, so that the entire frame structure may be collapsed and occupy but a minimum of space.

With the above primary object, and other incidental objects, in view the invention consists of the devices and parts, or their equivalents, as hereinafter set forth.

In the accompanying drawing, Figure 1 is a top view of the sign showing the same applied to a window pane or other suitable vertical support; Fig. 2 is a side elevation of the frame shown in Fig. 1; Fig. 3 is an end elevation; Fig. 4 is a section on the line 4—4 of Fig. 1, looking rearwardly, fragments only, however, of the rear horizontal strips at the rear end of the frame being shown; Fig. 5 is a section on the line 5—5 of Fig. 1, a fragment of one of the upright strips at the rear and a fragment of the upper longitudinal strip of one of the side pieces only being shown; Fig. 6 is a vertical section on the line 6—6 of Fig. 5; and Fig. 7 is a view showing the frame collapsed or folded together.

The frame consists of two side pieces and a rear end piece, the side pieces being preferably converged forwardly toward and to each other, so that the frame is of triangular form. The several parts of the frame are also preferably, although not necessarily, of metal, and the two side pieces may be open so that an illuminating medium placed within the frame may transmit its light through transparent plates removably carried by the side pieces, and having the signs delineated thereon.

Each side piece is composed of top and bottom longitudinal strips 8 and 9 respectively. The upper edge of each top strip is bent over downwardly and slanted outwardly to form an upper longitudinal guide way 10. The lower edge of the bottom longitudinal strip 9 of each side piece is bent upwardly and slanted outwardly, to form a lower guide strip 11. These guide ways permit of the slidable engagement of a transparent sign 12 therewith, or a nontransparent sign therewith, when the device is used during the day time, and it is not desired that a light should be placed within the frame.

The converged ends of each set of top and bottom longitudinal strips forming the side pieces, are supported by means of vertical strips 13, 13. These parts are preferably secured together by punching out the metal, as indicated by the numeral 14, and leaving tongues 15 projecting from the punched out portions of the top and bottom strips, which tongues are extended through the punched out openings, and bent against the inner sides of the strips 13. The vertical strips 13, and the converged forward ends of the longitudinal strips 8 and 9 are mounted on a common hinge pin 16, which pin passes through knuckles 17 formed at the front edges of the top and bottom longitudinal strips of the respective side pieces, and through knuckles 18 formed at the front edges of the vertical strips 13. The rear ends of the top and bottom longitudinal strips 8 and 9 are also connected by means of rear vertical strips 19, 19, and the opposite ends of these vertical strips are secured to the rear ends of the longitudinal strips preferably by punching out the metal in the same manner as in the case of the front vertical strips, to form holes 20, and tongues 21, said tongues being left on the longitudinal strips and extended through the punched out holes and bent against the inner sides of the rear vertical strips.

The rear end of the frame is composed of the top and bottom strips 22 and 23 respectively. The ends of these strips are formed with knuckles 24, and the rear edges of the vertical strips 19 are formed with knuckles 25. The respective knuckles of the strips 19 and 22 and 23 register to receive pins 26 and 27, the former being a hinge pin, and the latter a removable pin, which is preferably formed at its upper end with a handle 28 for convenience in removing the same.

The frame work is more especially intended for use in connection with suction cups, which act to detachably hold the sign to a pane of glass, or other suitable supporting medium. These suction cups are indicated by the numeral 29, and are composed of some flexible material, preferably rubber, and are provided with projecting threaded stems 30, which are passed through the rear horizontal strips 22 and 23, and receive on their inner ends nuts 31, which nuts are turned on to the stems and against the inner sides of said strips. In attaching a sign the suction cups are advisably moistened, and compressed against the pane of glass or other support. The suction thereby created is sufficient to hold the sign detachably in place, its removal being effected merely by an outward pull on the frame. I prefer to employ in connection with this form of frame four of the suction cups applied at the four corners of the rear of the frame, as most clearly shown in Fig. 3.

From the foregoing description of the construction of my invention it will be seen that I provide a frame which is capable of being readily folded together when not in use, and as readily unfolded and secured together when it is desired to use the sign. In collapsing the frame work, all that is necessary to be done is to remove the pin 27. This will permit the rear horizontal strips 22 and 23 to be folded in against the top and bottom longitudinal strips of one of the side pieces, and the hinge construction of the front of the side pieces will then permit the said side pieces to be folded together, as clearly shown in Fig. 7. When it is desired to use the sign, the rear horizontal strips 22 and 23 are swung outwardly, and the knuckles 24 thereof are brought into registration with the knuckles 25 of the rear vertical strips. The pin 27 is then reinserted, and the sign thereby properly set up ready for use.

What I claim as my invention is:-

1. A frame for a sign, consisting of side pieces and an end piece, the side pieces converged forwardly and hinged together at their converged edges, and the end piece provided at opposite edges with knuckles registering with knuckles at the rear edges of the side pieces, a hinge pin fitted in one set of said registering knuckles, and a removable pin fitted in the other set of said registering knuckles.

2. A frame for a sign, consisting of open side pieces and an end piece, the side pieces provided with ways for the slidable engagement therewith of signs, and said side pieces converged forwardly and hinged together at their converged edges, and the end piece provided at opposite edges with knuckles registering with knuckles at the rear edges of the side pieces, a hinge pin fitted in one set of said registering knuckles, and a removable pin fitted in the other set of said registering knuckles.

3. In a frame for a sign, the combination of side pieces each comprising upper and lower longitudinal strips adapted for supporting signs, and converged forwardly, and provided at their converged edges with knuckles, vertical strips connecting the longitudinal strips at the forward edges thereof, and provided with knuckles registering with the knuckles of the longitudinal strips, a hinge pin passing through said registering knuckles, rear vertical strips connecting the rear ends of the longitudinal strips and provided with knuckles, rear upper and lower strips provided at opposite ends with knuckles registering with the knuckles of the rear vertical strips, a hinge pin fitted in one set of said registering knuckles, and a removable pin fitted in the other set of said registering knuckles.

In testimony whereof, I affix my signature, in presence of two witnesses.

SAMUEL L. AARONS.

Witnesses:
ANNA F. SCHMIDTBAUER,
ALMA A. KLUG.