W. R. CLAYTON.

DESICCATING APPARATUS.

APPLICATION FILED MAY 12, 1913.

1,130,890. Patented Mar. 9, 1915.

Fig. 1

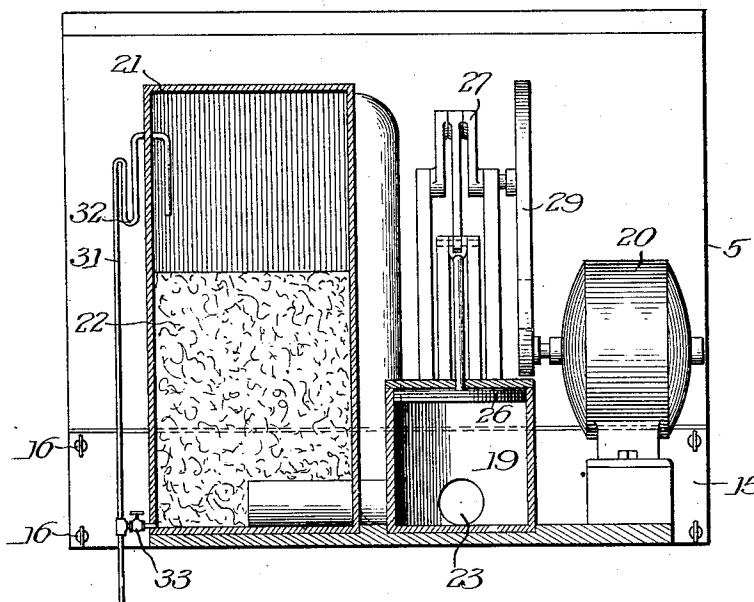

Fig 2

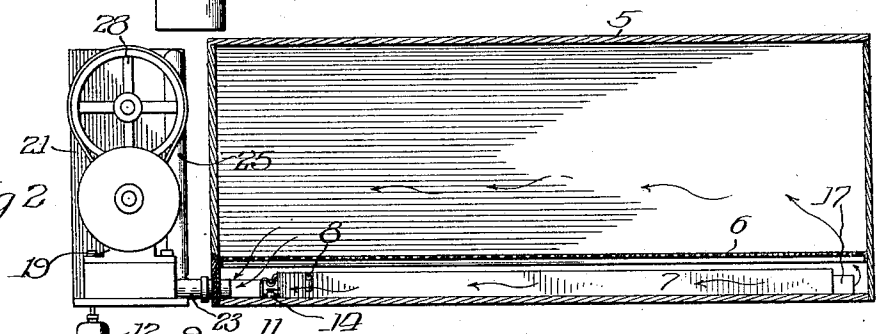

Fig 3.

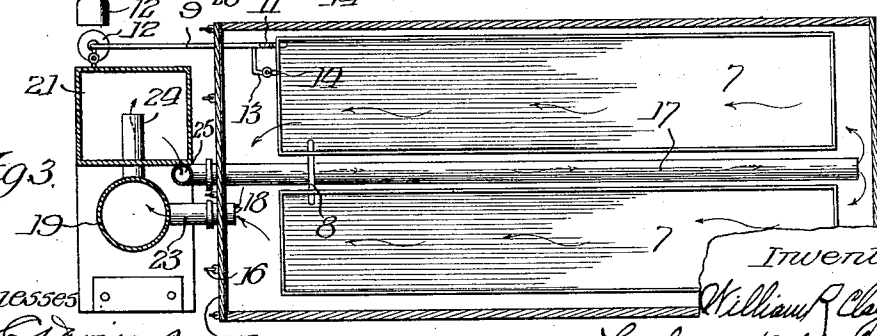

Witnesses
Geo. C. Davison
Ira J. Wilson

Inventor
William R. Clayton
By Lothrop Bell & Keller
Attys.

THE NORRIS PETERS CO., PHOTO-LITHO., WASHINGTON, D. C.

UNITED STATES PATENT OFFICE.

WILLIAM R. CLAYTON, OF BARBERTON, OHIO.

DESICCATING APPARATUS.

1,130,890. Specification of Letters Patent. Patented Mar. 9, 1915.

Application filed May 12, 1913. Serial No. 767,064.

To all whom it may concern:

Be it known that I, WILLIAM R. CLAYTON, a citizen of the United States, residing at Barberton, in the county of Summit and State of Ohio, have invented certain new and useful Improvements in Desiccating Apparatus, of which the following is a specification.

The present invention relates in general to means for preserving dead bodies and has more particular reference to a desiccating apparatus by means of which the moisture may be removed from the bodies so that they may be maintained in a state of preservation without disintegration or putrefaction.

One of the objects of the present invention is the provision of a casket of improved construction adapted to contain a receptacle provided with drying material by means of which the moisture is withdrawn from the air surrounding the body in the casket.

Another object is to provide a drying chamber outside the casket and an air pump with suitable connections whereby a closed circuit of air may be maintained through said casket and said drying chamber.

A further object is to provide an overflow for the drying receptacle within the casket which will conduct surplus liquid from the receptacle to a closed container without admitting air to the casket.

Other objects and advantages will be readily apparent as the invention becomes better understood by reference to the following description when considered in connection with the accompanying drawings.

Referring to the drawings—Figure 1 is a transverse sectional view through the drying chamber and pump; Fig. 2 is a longitudinal sectional view through the casket; and Fig. 3 is a horizontal sectional view through the casket, drying chamber and pump.

On the drawings reference character 5 indicates a casket adapted to contain the body to be preserved. The casket is provided a limited distance above its bottom with a perforated support 6 designed to support a body within the casket and form a chamber therebeneath for the reception of one or more receptacles 7 adapted to contain drying material. Any suitable drying material having an affinity for moisture and capable of withdrawing the moisture from the air in the casket may be employed, but I have found that very good results may be obtained by the use of sulfuric acid. In the present instance I have shown two receptacles spaced apart longitudinally and connected by an overflow pipe 8 through which surplus liquid may flow from one receptacle to the other.

In order to prevent the receptacles from overflowing as the quantity of liquid increases by absorption of moisture from the air, I have provided an overflow pipe 9 including an air-trapped siphon 11 through which the surplus liquid may overflow to a closed container 12 located outside the casket. To render possible the withdrawal of all of the liquid from the receptacle 7 when desired, I have provided an air pipe 13 equipped with a hand valve 14 which, when opened, permits the liquid to be drawn off from the receptacle.

In order that the drying receptacles may be introduced into the casket I have provided one end of the casket beneath the support 6 with an opening which may be sealed with a permanent closure before and after the desiccation has taken place and I have, also, provided a temporary closure 15 adapted to replace the permanent closure when the desiccation is to be carried on. Both the temporary and permanent closures may be held in closed and sealed position by thumbscrews 16, or other preferred fastening means.

In some instances the desiccation may be carried on solely by means of the drier contained in the receptacle 7, but I have found that it is preferable to hasten the desiccation by maintaining a circulation of air in the receptacle by mechanism which I will now describe.

The temporary closure 15 is permanently equipped with an inlet pipe 17 adapted to extend between the drying receptacles 7 substantially to the opposite end of the casket and also with an outlet pipe 18 terminating just inside the closure. I have also provided a circulating and drying means in the form of an air pump 19 operated by a suitable motor 20 and a drying chamber 21 equipped with suitable air-drying material 22. A pipe 23 communicating with the air pump 19 is adapted to be connected with the outer end of the outlet pipe 18. The exhaust air from the air pump is delivered by a pipe 24 into the drying chamber 21

from which, after passing through the drying material, it is conducted by a pipe 25, adapted to be connected with the outer end of the inlet pipe 17, to the casket. The air pump may be of any suitable construction, but I have shown for purposes of illustration a pump comprising a cylinder in which a piston 26 is reciprocated from a crank shaft 27 supplied with a pulley 28 which is driven through the instrumentality of a belt 29 from the motor 20.

It will be manifest that a closed circuit of air is established from the casket through the air pump, the drying chamber 21 and the return pipes 25 and 17 to the casket whereby a continuous circulation of air may be maintained. During the operation a portion of the moisture is removed from the air by the drying material in the receptacle 7 and the remainder of the moisture is removed by the drying material 22 in the drying chamber 21. In order that the liquid drying material which overflows from the receptacle 7 into the container 12 may not absorb moisture from the surrounding atmosphere, it is essential that the container be sealed. The air displaced from the container by the inflow of drying liquid from the receptacle 7 is conducted through a pipe 31 to the drying chamber 21, a liquid seal 32 being provided in this pipe to prevent the air from circulating from the drying chamber therethrough into the container 12 when the pump and drying chamber are not in use.

In the process of desiccating the body it is usually preferable to maintain a constant circulation of air by means of the pump a number of hours to remove the greater part of the moisture from the body, after which, the pump may be stopped and the drying material in the receptacles 7 may be relied upon to remove the remaining moisture from the body. The moisture which is collected in the drying chamber 21 may be drawn off through the valve 33, when necessary.

While I have shown a single casket connected with a drying apparatus, it will be manifest that my present system is adapted for use in connection with a number of caskets and my present invention contemplates the piping of a mausoleum so that the pipes 23 and 25 attached to a stationary pump and drying chamber may be connected with each crypt of the mausoleum. After the body has been thoroughly desiccated the drying receptacles 7 may be removed and the temporary closure 15 replaced by a permanent closure which effectually seals the casket and maintains the body in a state of preservation. It will be manifest that my improved apparatus contemplates the complete desiccation of the body without permitting any of the gases or moisture to escape to the atmosphere thereby precluding the pollution of the surrounding air or the transmission of infectious or contagious diseases.

While I have shown and described one preferred embodiment of my invention it will be understood by those skilled in the art that the details of construction shown and described are capable of considerable modification and variation within the scope of the invention as set forth in the following claims.

I claim:

1. In a desiccating apparatus, the combination of a casket, a perforated support for the body arranged within said casket, a receptacle for drying material disposed beneath said support, and means for permitting overflow of liquid from said receptacle without admitting air to the casket.

2. In a desiccating apparatus, the combination of a casket adapted to contain the body to be desiccated, a perforated support, spaced from the bottom of the casket, upon which the body is supported, an opening in the end of the casket beneath said support, and a temporary closure for said opening provided with an inlet pipe terminating adjacent the opposite end of the casket and an outlet pipe terminating just inside said closure.

3. In a desiccating apparatus, the combination of a casket, a receptacle adapted to contain drying material disposed within said casket, an air pump and a drying chamber disposed outside the casket, a pipe leading from the casket to said pump through which air is withdrawn from the casket, and a pipe leading from said drying chamber to the casket through which air is admitted to the casket, the exhaust of said pump being delivered to said drying chamber whereby a closed circulation of air through the casket and the drying chamber is maintained by the pump.

4. In a desiccating apparatus, the combination of a casket, a receptacle for drying material located in the bottom of said casket, a body support disposed above said receptacle, a closed container for receiving overflow liquids from the drying receptacle, and means whereby the liquid from said drying receptacle may be drawn off into said container.

5. In a desiccating apparatus, the combination of a casket, a drying receptacle located in the bottom thereof, an overflow pipe leading from said receptacle, a container arranged to receive the overflow liquids from said pipe, a drying chamber located outside the casket, a pipe for delivering displaced air from said receptacle into said drying chamber, said pipe being provided with a liquid seal, a pump, and connections whereby a closed circulation of air may be maintained through said casket and said drying chamber.

6. In a desiccating apparatus, the combination of a casket, an air pump and a drying chamber disposed outside of the casket, a drying material disposed in said drying chamber, a pipe leading from the casket to said pump through which air is withdrawn from the casket, a pipe leading from said drying chamber to the casket through which air is admitted to the casket, and a pipe connected to deliver the exhaust from said pump to said drying chamber whereby a closed circulation of air through the casket and the drying chamber is maintained by the pump.

7. In a desiccating apparatus, the combination of a casket, a perforated support spaced from the bottom of the casket and adapted to support the body to be desiccated, an air pump and a drying chamber disposed outside of the casket, a drying material disposed in said drying chamber, a pipe leading from the casket to said pump through which air is withdrawn from the casket, a pipe leading from said drying chamber to the casket through which air is admitted to the casket, and a pipe connecting the exhaust of said pump with said drying chamber whereby a closed circulation of air through the casket and the drying chamber is maintained by the pump.

8. In a desiccating apparatus, the combination of a casket adapted to contain the body, a drying material disposed within said casket, a drying chamber disposed without said casket and communicating therewith, a drying material in said drying chamber, and means for producing a closed circulation of air between said drying chamber and the interior of said casket.

WILLIAM R. CLAYTON.

Witnesses:
RAY E. MORTON,
W. A. MORTON.

Copies of this patent may be obtained for five cents each, by addressing the "Commissioner of Patents, Washington, D. C."