United States Patent [19]

Weber et al.

[11] **3,806,109**

[45] **Apr. 23, 1974**

[54] **TILTABLE TREATMENT TABLE**

[75] Inventors: **Albert J. Weber,** Valley City, N. Dak.; **Frank H. Erling,** St. Paul, Minn.; **Clair A. Bearfield,** Valley City, N. Dak.

[73] Assignee: **Tri W-G, Inc.,** Valley City, N. Dak.

[22] Filed: **Aug. 14, 1972**

[21] Appl. No.: **280,679**

[52] **U.S. Cl.** **269/323,** 250/439

[51] **Int. Cl.** **A61g 13/00**

[58] **Field of Search** 269/323; 5/62, 63; 250/439–456; 108/4

[56] **References Cited**

UNITED STATES PATENTS

2,456,277	12/1948	Heitz-Boyer	269/323 X
2,588,762	3/1952	Reager et al.	269/323
2,828,172	3/1958	McDonald	269/323
3,089,692	5/1963	Blomqvist	269/323
3,293,667	12/1966	Ohrberg	269/323 X

Primary Examiner—Roy Lake
Assistant Examiner—Neil Abrams
Attorney, Agent, or Firm—Schroeder Siegfried Ryan & Vidas

[57] **ABSTRACT**

A tiltable treatment and examination table employing a movable base structure with the first pivotal mounting member mounted thereon to define a first pivot axis on the upper portion of the base structure and with the pivotal mounting member including a second pivot structure mounting the patient support table thereon through a second pivot axis normal to the first pivot axis. Hydraulic actuators connected between the base structure and the table and the pivot structure and the table provide for smooth pivoting of the table support on the respective axes with the hydraulic actuators being energized from self-contained electro-hydraulic motor pump combinations including hydraulic reservoirs to provide for two separate hydraulic systems. Each system is controlled from a manually operated switch which selectively energizes the electric motor portions of the hydraulic systems to provide for hydraulic energization of the motors bidirectionally for tilting of the table.

11 Claims, 6 Drawing Figures

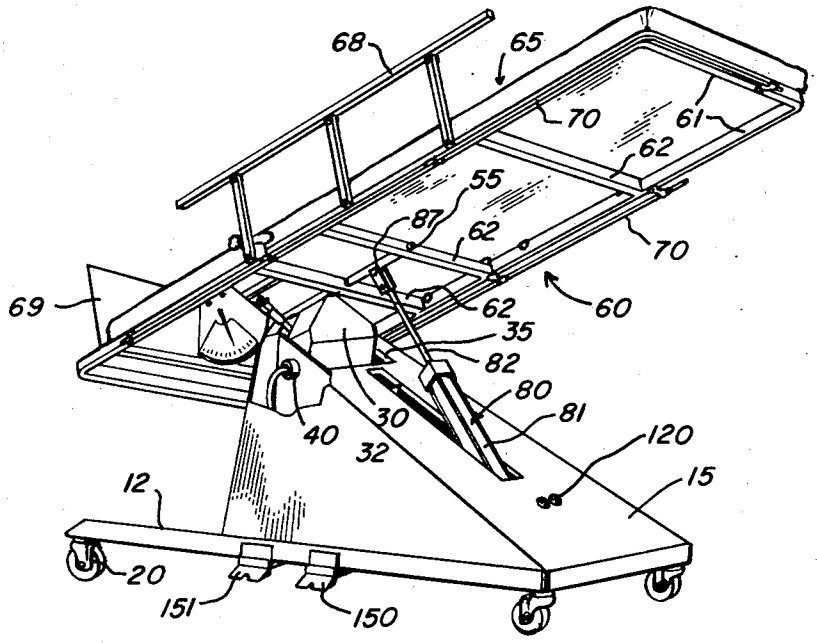

FIG. 1.

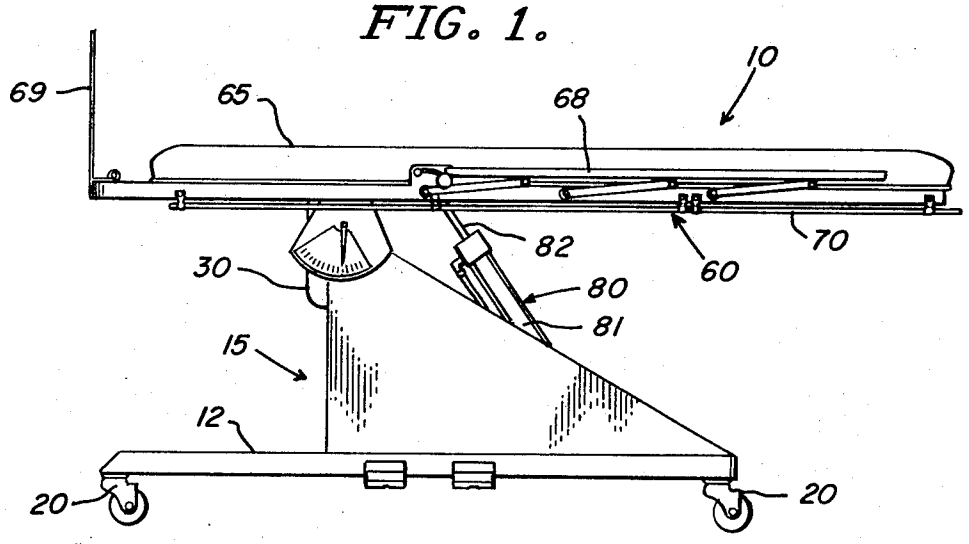

FIG. 3.

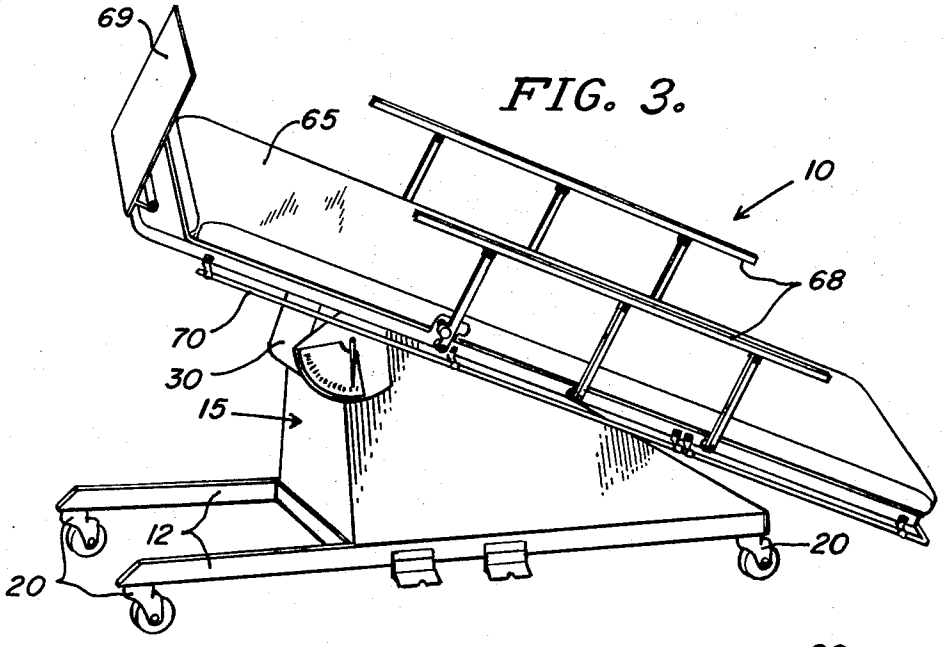

FIG. 6.

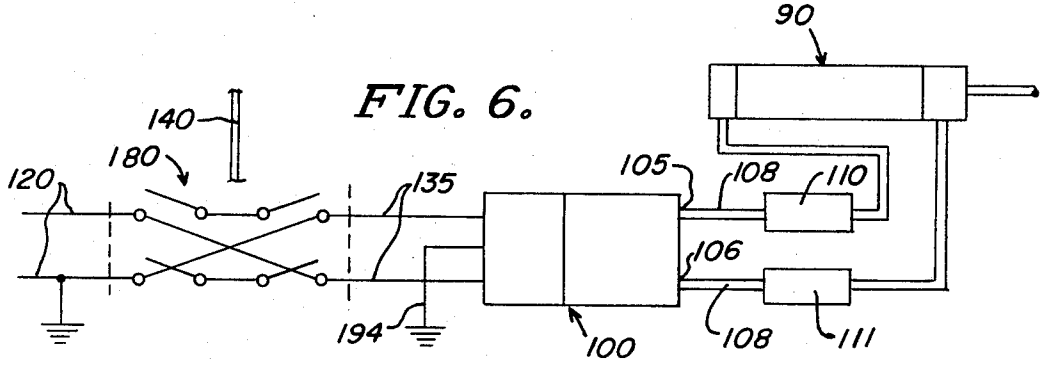

FIG. 2.

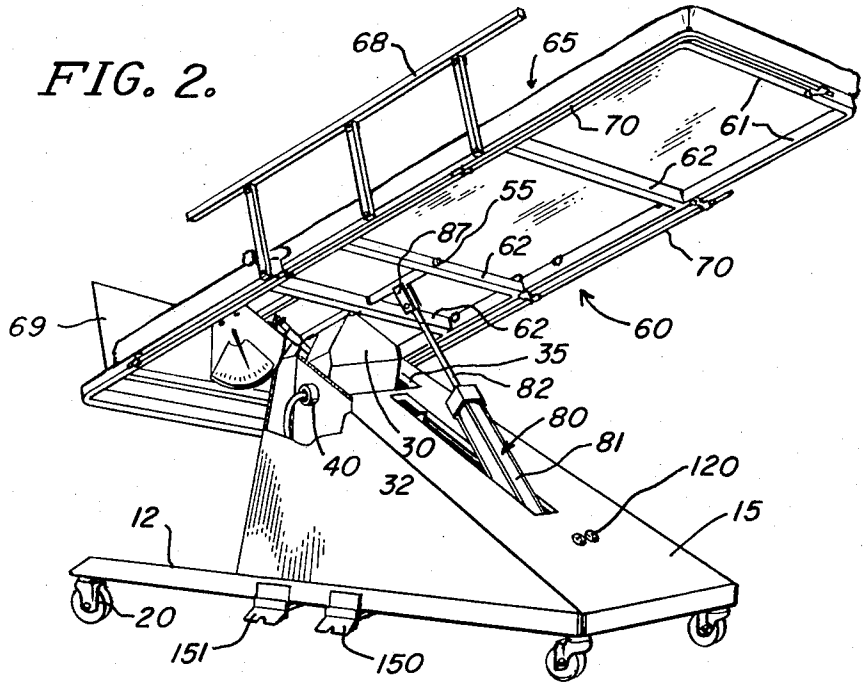

FIG. 5.

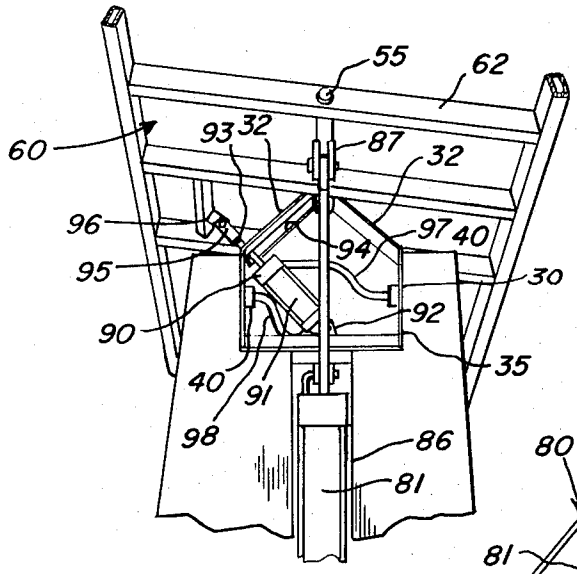

FIG. 4.

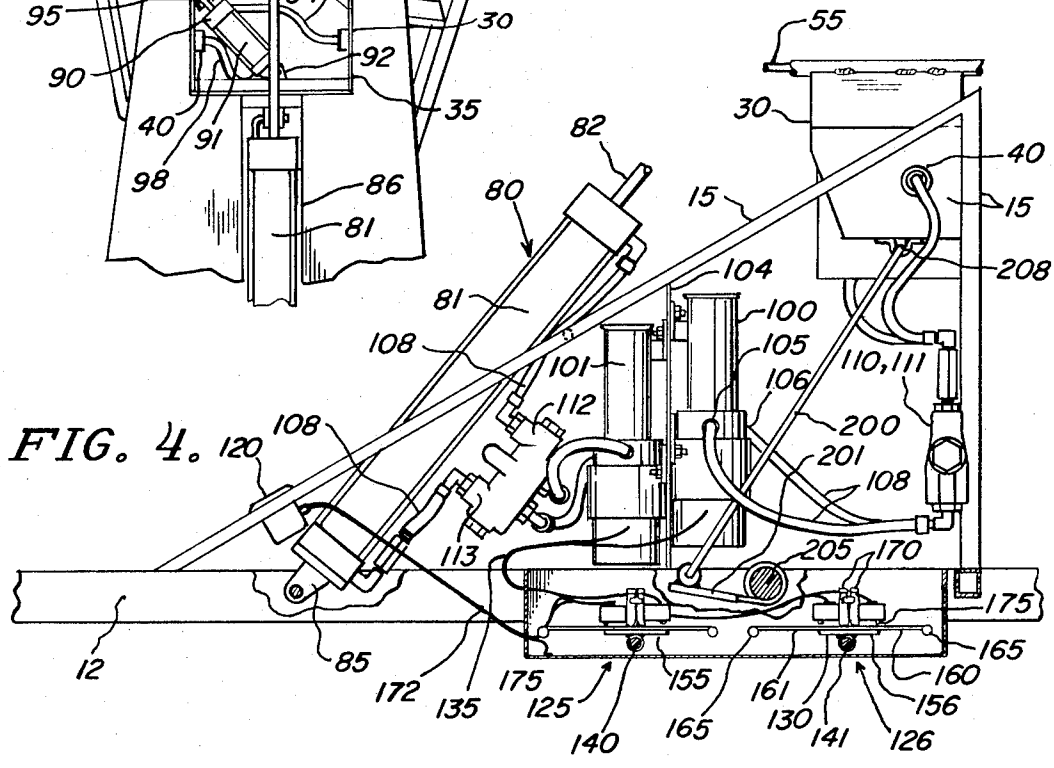

TILTABLE TREATMENT TABLE

Our invention relates to tiltable table structures used in medical examination and treatment and more particularly to an improved examination and treatment table having two axes of tilt to facilitate ease in examination and treatment.

X-ray examination tables and treatment tables are known and in use. Generally, such tables or patient supports are restricted to one axis of tilting movement and may include means for elevating or lowering the same. Particularly, in certain types of examination such as radiographing and urological examinations, it is necessary that the axis of tilt be such that the patient may be moved from a horizontal position to a near vertical position and returned thereto with stability in the patient for examination purposes. However, such prior designs are cumbersome in structure and pivotal orientation, are restricted to a single tilt axis of movement and provide limited access for the operator with respect to the patient thereon. Therefore, they are limited in orientation as far as the patient is concerned for examination and treatment purposes.

The present invention is directed to an improved examination and treatment table in which the patient's support or table's top structure is so mounted on a base as to be tilted through a first major axis of tilt of approximately 115° or from a near vertical position to an inclined position beyond the horizontal through the use of a simple hydraulic mechanism. The improved table design incorporates an additional tilt axis transverse to the first or major axis permitting tilting of the patient's support approximately 15° to 20° to either side of a reference or vertical position and such tilting operation can be effected simultaneous with tilt of the first axis or independent thereof to provide an extreme range of movement for examination and treatment purposes. The table is powered by a simplified self-contained hydraulic power source operating through hydraulic actuators and with a simplified control mechanism to quietly and smoothly position a patient through tilting of the table top through the extreme ranges of tilt thereof and to hold the patient and the table top in such a position for treatment and examination purposes.

It is therefore the principal object of this invention to provide an improved examination and treatment table of the tiltable type capable of tilting about a pair of axes simultaneously or selectively.

Another object of this invention is to provide an improved examination and treatment table which is powered by hydraulic actuators from a simplified electro-hydraulic power source.

A further object of this invention is to provide an improved tiltable treatment and examination table which permits free access and control by an operator to insure stability of the patient and proper positioning of the same thereon for examination and treatment purposes.

Another object of this invention is to provide an improved tiltable treatment and examination table which will positively position the table in varying orientations for examination and treatment purposes and maintain the table at all times in such positions until controllably moved by the operator.

A still further object of this invention is to provide an improved tiltable treatment and examination table which is simple in design, relatively low in cost and easy to use and maintain.

These and other objects of this invention will become apparent from the reading of the attached description together with the drawings wherein:

FIG. **1** is a side elevation view of the improved tiltable treatment and examination table with the table in a horizontal position;

FIG. **2** is a perspective view of the improved tiltable treatment and examination table showing tilt about one axis of pivot;

FIG. **3** is a perspective view of the table of FIG. **1** showing tilt about the first and second axis of pivot;

FIG. **4** is a fragmentary side elevation view of the tiltable treatment and examination table with the base cover removed showing the controls for the same;

FIG. **5** is a front elevation view of a portion of the treatment table with the cover of the pivot member removed and with parts in section; and

FIG. **6** is a schematic circuit for one of the electro-hydraulic actuator pump systems for pivoting the table about one of the axes of movement.

Our improved examination and treatment table is mounted on a base frame, indicated generally at **10,** which includes a pair of rail members **12** supporting a prism like base structure **15.** The rail members have suitable casters **20** on the bottom of the same to provide for mobility of the table. The base structure **15** is in the form of a right triangular prism extending between the rail members and having a flat lower surface with two inclined sides, one being substantially vertical, to define an apex for the base structure in which is mounted a pivot or support member **30.** The pivot member **30** is a generally box-like structure having an inclined or triangular shaped prismatic surface **32** having an apex at the upper surface thereof. The pivot member **30** or box-like structure is mounted in a recess or slot **35** in the upper end or surface of the base structure **15** and is pivoted therein through suitable pivot members **40** which form fluid passages as well as a pivot structure for pivoting the pivot member on the base structure. The apex or upper surface of the pivot member **30** provides a mounting or second pivotal axis for the table support frame indicated by a shaft **55** extending between cross braces **62** of the table support frame and through suitable journal mountings in the apex of the pivot member to define the second axes of pivot for pivoting the table top or support frame **60** on the pivot support member **30.** This second axis is normal to the first named axis and located above the same. The table support frame **60** is formed by the cross brace member **62** and end members or side members **61** suitably welded together to form a generally rectangular frame which is pivoted on the second axis for tilt thereon through a range of movement which is limited by the slope of the inclined surfaces **32** of the pivot member and is generally about 15° to either side of the horizontal. The frame support member as indicated in FIG. **1** mounts a suitable patient's support mattress or frame **65** thereon and the side frames include a foldable rail structure **68** and an end or foot support structure **69** at one end of the same to guide and support a patient on the table. Suitable hand rails **70** are attached to the frame for aid to the attendants in positioning the table and a patient thereon. The table support's frame **60** is tilted about the first named axis by means of an elongated hydraulic actuator, indicated generally at **80,**

and incorporating a cylinder **81** and shaft **82** which are connected respectively to the base support or frame **15** and the undersurface of the table support frame **60,** as will be hereinafter noted. As will be seen in FIG. **5,** the cylinder **81** is pivotally mounted on a flange support structure **85** within the interior of the base structure **15** and the cylinder extends through a slot **86** in one surface of the inclined upper surface of the base structure with the shaft extremity **82** of the actuator **80** being pivotally connected to a rod or axle **87** tied to the undersurface of the frame **60** as at **87.** The actuator will tilt the frame and the pivot member **30** about the first named axis through a range of movement which will be generally defined by the vertical side or from a vertical position to an inclined position at the other side of the vertical of approximately 25° to the horizontal. This range of movement is limited by the slope of the opposite or inclined surface of the frame structure and the length of the actuator **80.**

Within the pivot member **30,** as will be best seen in FIG. **5,** is positioned a second actuator, indicated generally at **90,** which includes a cylinder member **91** pivotally attached to the interior or base portion of the pivot member **30** as at **92** with the shaft extremity **93** extending through a slot **94** in one of the inclined surfaces of the upper surfaces of the pivot member and attached by means of a coupling member **95** to a flange **96** on the undersurface of the table frame **60** at the cross frame **62** forming a portion thereof. This actuator will tilt the frame **60** and hence, the table **65** thereon about the second axis defined by the shaft **55** on the pivot member through a range of movement of approximately 15° to either side of horizontal or greater within the limits of the actuator and as limited by the inclined upper surfaces of the pivot member **30.**

Hydraulic fluid for actuating the actuator **90** is introduced through fluid lines **97, 98** which connect to the tubular hollow pivot members **40** journaling the pivot member **30** on the base structure **15.**

FIG. **4** shows the interior of the base structure **15** with the controls for operating the hydraulic actuators **80** and **90** for the treatment table which pivots the same about the first and second axis of movement as herebefore defined. The power source for the hydraulic actuators are composite motor, reservoir and pump structures indicated generally at **100** and **101,** each of which are mounted on an upstanding centrally located flange **104** positioned in the base structure. These units employ an electric motor which when energized through one or the other of a pair of directional windings will operate an internal pump and move fluid from the hydraulic reservoir through one or the other of a pair of outlets as indicated by the tubes **105, 106** with the opposite port or tube becoming the return line. We have found that a motor pump unit of the type manufactured by Christie, Inc., of Portland, Oregon and Type Number 2017862 is suitable for this purpose.

The hydraulic fluid pump by the motor pump reservoir combination is directed through flexible hoses or pipes **108** to a pair of check valves **110, 111** leading to opposite ends of the actuators. As shown in FIG. **4,** they connect through the tubular conduit and journal members **40** to opposite ends of the actuator **90.** Similarly, the pump **101** directs fluid through check valves **112, 113** from the outlet ports **105, 106** and through the flexible hoses **108** to opposite ends of the cylinder **81,** as will be best seen in FIG. **5.** The check valves **110, 111, 112** and **113** are shown mounted in a common manifold assembly each being separate units having unrestricted flow in one direction and a partially restricted flow in the reverse direction. This will enable fluid pumped from the pump through a respective line connected in the check valve to flow directly to the appropriate end of the cylinder to which the check valve is connected but return flow from this end of the dylinder, when the opposite end is receiving fluid, in a restricted manner to provide for a smooth movement of the shaft and tilting of the table.

The electric motor portions of the hydraulic pump or motive sources **100, 101** are powered from an electrical source adapted to be connected to outlet connectors **120** mounted in the face of the base structure extending to an electrical conduit indicated at **122** to a pair of reversing switches **125, 130,** respectively. The reversing switches will selectively apply power through cabling indicated at **135** to the respective electric motors and in certain directions as will be indicated by the schematic circuit in FIG. **6.** Operation of the reversing switches is effected by means of rotation of shafts **140, 141** extending along the base structure and through either side of the base support structure **15** terminating in foot pedals **150, 151** on either side of the table. The shafts are journaled in the support structure and are adapted to be rotated through a limited range of movement in either direction from a reference position by foot engagement of the pedal on one or the other side thereof. The shafts, as indicated in FIG. **5** are connected to T shaped flange members **155, 156** which operate against a pair of level members **160** and **161** on the undersurface thereof. The lever members are pivotally mounted at one extremity, as at **165,** on a support frame **166** in the base structure and suitable return springs, indicated generally at **170,** are positioned on the support frame **166** to restrict movement of the levers **160** or **161** and center the shafts. Upper movement, the levers **160** or **161** will operate against the toggle **175** of a switch to effect a switching action. The pairs of switches shown in the drawings each form the reversing switches **125, 126** which are operated by directional movement of the shafts. In effect each pair forms a conventional double-throw, double pole switch with one or the other of the switches of the pair being operated depending upon the direction of rotation of the respective shafts.

Since each of the hydraulic source and electrical circuits are identical only one is shown in FIG. **6.** In its simplified form as shown schematically in the circuit they are connected as a conventional double-pole, double-throw switch, indicated generally at **180.** The circuit connection connects common poles of the two switches **176** together to form the double-pole, double-throw switch with a power source **120** being connected to one side thereof and through conductors indicated at **135** leading to the motor pump combinations **100, 101.** In the drawings, a center tap of the motor windings is shown grounded, as at **194,** to provide for directional energization of one or the other of a pair of directional control windings for opposite pumping action. The outlet pipes, as indicated by the ports **105, 106,** take flow through the lines **108** and check valves **110, 111** to the actuator **90** or the opposite ends thereof. Thus, depending upon which side of the double-pole, double-throw switch is thrown, the motor **100** or **101** will be energized in an opposite direction to

cause pumping from the reservoir of the hydraulic fluid providing for flow out of one of the outlet ports **105** and return flow through the opposite outlet port **106.** The hydraulic fluid will be directed to one or the other end of the actuator with the opposite end having fluid returned therefrom through the restricting check valves **110, 111.**

Also positioned within the base structure **15** is a lever member **200** which is pivotally connected through a connecting linkage **201** to one end of a coil spring **205** positioned on a rod like member **206** attached to the base frame structure **15.** The opposite end of the lever **200** is mounted through a coupling **208** on the undersurface of the pivot member **30.** This lever combination will provide a bias to the pivot or support member **30** on the table frame against which the appropriate pump **101** and its actuator **80** will work to tilt the table about the pivot axis defined by the journal members **40.** This bias insures that smooth pivotal movement will be provided from the hydraulic actuator **80** and will insure movement of the table top through the complete range of movement in one direction or the other. The spring is biased on either side of a reference position or the normally horizontal position of the table and pivotal movement of the table top or the support frame **60** through operation of the actuator **80** to either side of this reference position will tend to bias the spring providing a spring bias force on the undersurface of the pivot member **30** and applied to the table which will insure a smooth return of the table to a reference position.

In the operation of the controls, the operator need merely deflect or step on one of the other of the switches **150, 151** causing rotation of the respective shafts **140, 141** to operate the double-pole, double-throw switch combinations energizing the electric motor portions of the self-contained hydraulic system or motor pump combinations **100, 101** for the respective actuators. These may be operated simultaneously or independently providing for singular or composite tilting movement of the table as will be best seen in FIGS. **1, 2** and **3.** The improved tiltable table design permits an operator to readily position a patient through the ranges of tilt movement for examination and/or treatment while insuring stability to the patient and accuracy in positioning the patient with respect to equipment associated therewith. The de-energization of the motor pump combinations by opening of the switches will cause the pumps to stop operating and suitable internal check valving therein will prevent reverse flow to the reservoir within so that the actuators will remain in the position to which they were energized until they are appropriately energized in the opposite direction to cause fluid flow in the opposite direction and return of the fluid from the first named end to the cylinder back to the reservoir. Thus, a simplified examination and treatment table is provided with a simplified electrohydraulic or self-contained motor control for accurately and smoothly positioning a patient for examination and/or treatment purposes. The guide rails **68** and flange member **69** on the table top enable positioning of a patient thereon accurately and securely during the tilting movement.

In considering this invention it should be remembered that the present disclosure is illustrative only and the scope of the invention should be determined by the appended claims.

What is claimed is:

1. A tiltable treatment table comprising, a base structure having inclined upper surfaces and a lower flat surface, a support member including means journaling the same at the apex of the inclined upper surfaces of the base structure about an axis transverse to the extent of the base structure, said support member having a triangular shaped top and including pivot means defining a second axis normal to the extent of the first named axis, a table member connected at its lower surface and intermediate the longitudinal and transverse extent of the same to the pivot means defining a second axis in the member, a first hydraulic actuator connected between the base and the table member and controllably pivoting the table member and the support member on the inclined upper surfaces of the base structure about the first axis, a second hydraulic actuator connected between the support member and the table member and controllably pivoting the table member on the triangularly shaped top of the support member about the second axis, means positioned in the base structure for reversibly supplying the source of hydraulic fluid to the first and second actuators, said means including respectively a pair of reversible electric motors connected to a self-contained hydraulic system of a pump, reservor and check valve means for reversibly supplying the source of hydraulic fluid for said actuators, and control means including control lever means projecting from the base structure and connected to the electric motors in the base structure operating the self-contained source of hydraulic fluid for each of the actuators to control independently the tilting of the table member about said first and second axis, said control means including a pair of reversing switches each operated by a separate lever and operative to connect a source of electric power respectively to the electric motors for the self-contained sources of hydraulic fluid.

2. The tiltable treatment table of claim **1** in which the base structure has the shape of a triangular shaped prism.

3. The tiltable treatment table of claim **1** in which the second actuator is positioned within the support member pivotally mounted on the base structure with an operating shaft extending through a slot in said support member.

4. The tiltable treatment table of claim **1** and including a lever means and a spring bias means connected thereto positioned between the base structure and the support member mounting the table member to apply a spring bias thereto about the first named axis of pivot.

5. The tiltable treatment table of claim **1** in which the means journaling said support member on the upper surface of the base structure includes hydraulic fluid passage means connected to one of the hydraulic fluid sources positioned in the base structure to provide a fluid passage to said second actuator tilting the table member on said support member.

6. The tiltable treatment table of claim **5** in which said support member journaled on the upper surface of said base structure is in the form of a prism having a pair of inclined top surfaces with the pivot means extending through the apex thereof to define said second pivot axis.

7. The tiltable treatment table of claim **6** in which the table member includes elevatable rails connected to the sides thereof on at least two sides to maintain a pa-

tient on the table member with tilting of the table member about said pair of axes.

8. The tiltable treatment table of claim **7** in which the control means includes control levers projecting from two opposite sides of the base structure and with castered wheels beneath said base structure to permit orientation of the table.

9. The tiltable treatment table of claim **8** in which the range of pivotal movement of tilting of the table member relative to the base structure is limited by the angles of the inclined surface of the base structure about said first axis of pivot.

10. The tiltable treatment table of claim **9** in which the range of pivotal movement of the table member transverse to the extent of the base structure and about said second axis of pivot on said support member is limited by the upper inclined surfaces of said support member to either side of the pivot means defining the second axis of movement.

11. The tiltable treatment table of claim **3** in which the first actuator is positioned within the base structure and extends through a slot in one of the inclined top surfaces of the base structure for connection to the table member.

* * * * *