July 3, 1934. A. MAGOWAN 1,965,465

VAPORIZER, LIQUID FUEL BURNER, AND THE LIKE

Filed Jan. 31, 1929 2 Sheets-Sheet 1

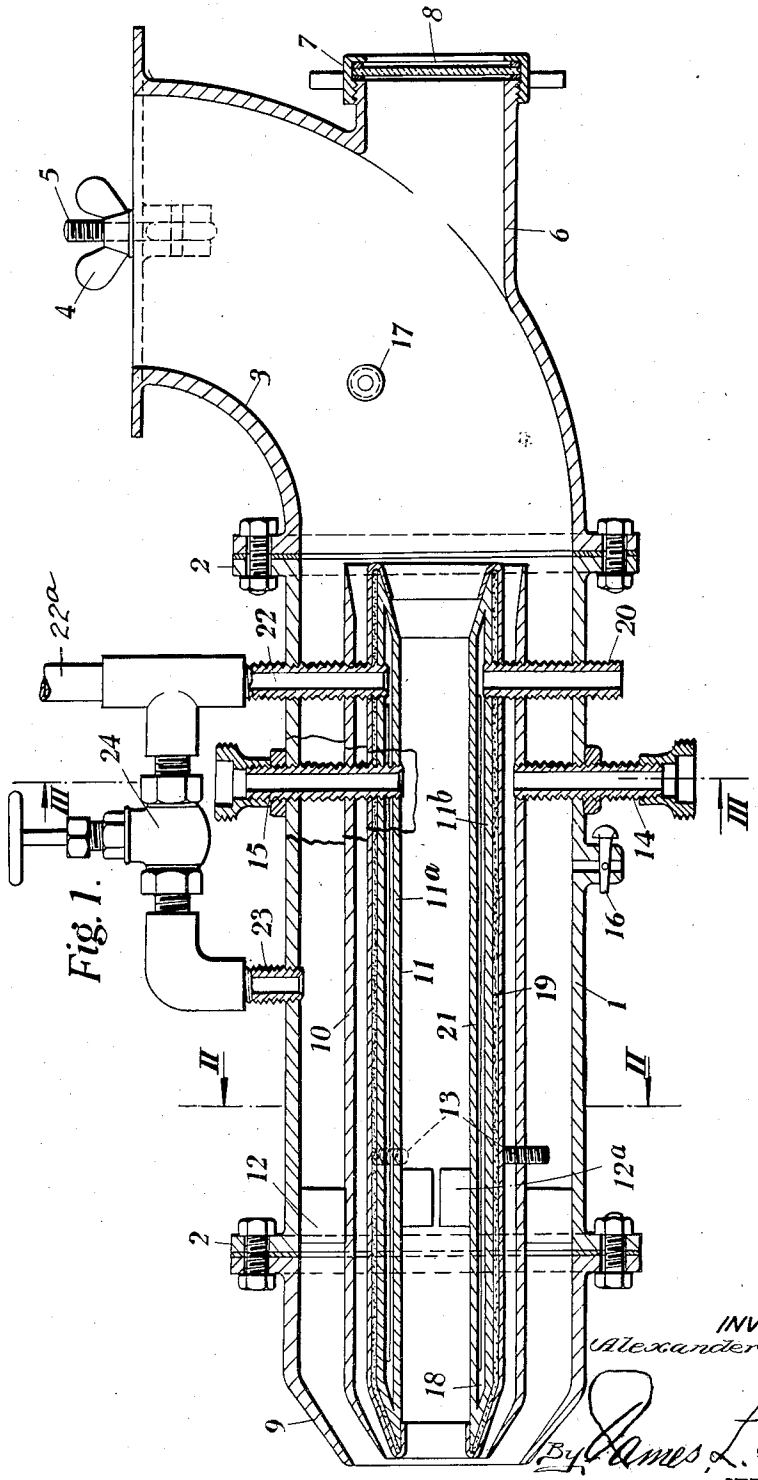

Fig. 1.

INVENTOR
Alexander Magowan
By James L. Morris
ATTORNEY

July 3, 1934. A. MAGOWAN 1,965,465

VAPORIZER, LIQUID FUEL BURNER, AND THE LIKE

Filed Jan. 31, 1929 2 Sheets-Sheet 2

Fig. 2.

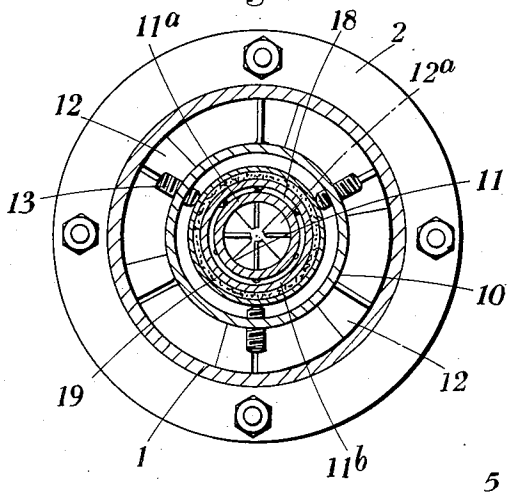

Fig. 5.

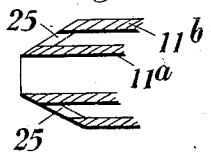

Fig. 4.

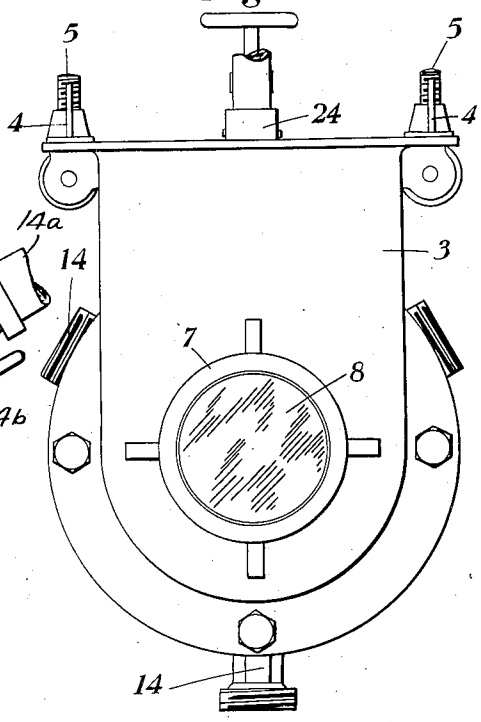

Fig. 3.

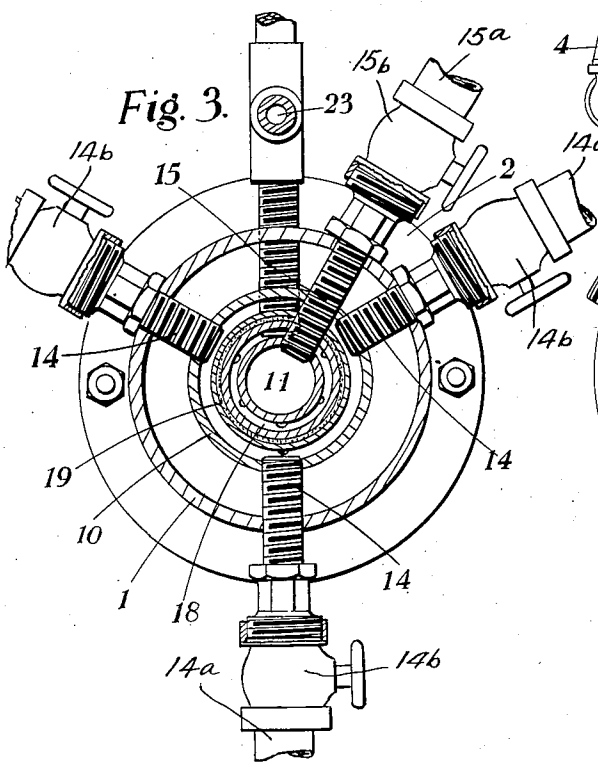

INVENTOR
Alexander Magowan
By James L. Morris,
ATTORNEY

Patented July 3, 1934 1,965,465

UNITED STATES PATENT OFFICE

1,965,465

VAPORIZER, LIQUID FUEL BURNER, AND THE LIKE

Alexander Magowan, Castleford, England

Application January 31, 1929, Serial No. 336,578
In Great Britain April 19, 1928

3 Claims. (Cl. 158—76)

This invention relates to new and useful improvements in vaporizers, liquid fuel burners or the like, and has for its principal object to provide means whereby perfect vaporization of a liquid is obtained, and whereby a mixture of the correct proportions of liquid and air is delivered from such vaporizer in a homogeneous or thoroughly mixed state.

For the sake of clearness this invention will be hereinafter described as applied to an oil burner but it is by no means limited to this particular application or use and can be used for vaporizing any suitable liquid.

In known types of oil burners the fuel is fed into a tube having a constricted opening, needle valve or nozzle at its outer end and high pressure air is fed past this end of the tube. By this means the burner delivers a stream of rich mixture into a combustion chamber at a high velocity which is utilized to induce a flow of air through an opening surrounding the burner body, but it has been found in practice that the two streams of combustible mixture and air at different velocities do not mix thoroughly, with the result that there is a lack of economy in fuel, and general inefficiency.

Further, the constricted passages, needle valves, nozzles and the like are liable to become choked with carbon or other extraneous matter and are comparatively inaccessible and difficult to clean.

In other types of burners inner tubes have been provided into which the jet or pipe is inserted by which oil is supplied to the said inner tube. In such burners however the air to be supplied to the inner tube has a gyratory movement imparted thereto, or the inner tube does not extend to the nozzle formed at the discharge end of the outer tube or casing and a chamber is thus formed between the discharge end of the inner tube and the discharge nozzle of the outer tube, a fan in the said chamber ensuring the mixing of the air and oil.

Further, it has been found in practice that a saving in fuel can be effected and more efficient vaporization can be obtained by the use of preheated air under pressure.

According to this invention a burner comprises concentric tubes, each open at one end to an air supply pipe and extending at the other end into a frusto-conical nozzle forming a continuation of the outermost tube, the inner tube to which fuel is supplied being unobstructed, and the outer tube having vanes or fins arranged therein to create a turbulence of the mixture issuing from the inner tube.

With such a burner preheated air at any desired, or unlimited, temperature can be employed whilst constrictions or obstructions of any kind in the passageways are reduced to an absolute minimum consistent with efficient construction. No moving parts are employed and means are provided for inspecting the interior of the burner whilst it is in use without interfering with its operation and without disconnecting or removing any part thereof. Moreover, by removing an inspection cap or other accessible part of the burner, the latter can be thoroughly cleaned without any appreciable loss of time.

A burner constructed generally in accordance with this invention comprises two or more tubes of desired length, open at both ends, arranged and spaced apart one within another. Fuel is fed into the inner tube which is surrounded by another tube adapted to be connected at one end to a source of air under pressure, such air being preferably preheated. The other end of this outer tube is formed with or carries a nozzle of suitable shape situated in a position adjacent to the outlet end of the inner tube to which the fuel is supplied.

In the accompanying drawings, which show how my said invention may be conveniently and advantageously carried into practice:—

Figure 1 shows a longitudinal central section of an oil burner constructed in accordance with this invention.

Figure 2 shows a transverse section thereof on the line II—II Figure 1, and

Figure 3 shows a transverse section thereof on the line III—III Figure 1.

Figure 4 is a rear end view of the said burner.

Figure 5 is a sectional detail view of a modification.

As shown in these drawings, the burner comprises an outer casing or tube, divided into three portions, the centre portion 1 having a parallel bore and flanges 2 at both ends. To one end flange 2 is connected a flanged elbow or bend 3 having the same bore as the centre portion 1 and adapted to be connected to an air pipe by means of a quickly detachable fastening comprising wing nuts 4 and swing eye bolts 5. The elbow 3 is arranged with a small tubular projection 6 in line with the centre portion 1 to which the elbow is connected. At its outer end the tubular projection is provided with a removable cap 7 which carries a disc of glass 8 or other suitable transparent material arranged to be held between

the cap and the end of the tubular projection, suitable washers being provided between the circumferential edges of the glass and the said cap and projection.

The provision of the disc of transparent material permits a continuous observation of the interior of the burner and thus the collection of any solid matter or oil sludge upon the walls of the tubes can be noticed and the flame produced can be also observed. Should solid matter or sludge collect on the walls of the tubes, the aperture formed by the removal of the plate of transparent material facilitates the easy and rapid cleaning of the tubes.

A flanged nozzle 9 of truncated conical form is bolted to the remaining flange 2 of the centre portion 1 of the outer casing. The bolting arrangements of this nozzle are of a quickly detachable type for a purpose hereinafter more fully described.

Within the outer casing 1 and the extension 9 thereof, are arranged an intermediate tube 10 and an inner tube 11, the casing and tubes being spaced apart one from another to enclose air channels or passages between them. The ends of the tubes 10, 11 adjacent to the elbow 3 have their interior surfaces flared or bevelled outwards. The other ends of the said tubes are arranged close to and within the outlet end of the nozzle 9 and the inner tube 11 has its exterior surface bevelled inwards whilst the intermediate tube 10 has both its exterior and interior surfaces bevelled inwards, i. e. is made of a conical form with converging exterior and interior surfaces.

The intermediate tube 10 is formed or provided with a number of curved fins 12. These fins can be arranged to contact with the bore of the outer casing 1 adjacent to the nozzle end, thereby assisting in holding this intermediate tube 10 in position within the outer casing 1 but are more especially provided for swirling the air as hereinafter more fully described. Vanes as shown at 12*a* are also provided in any of the tubes to swirl or eddy the air in a direction opposed to the swirl created by the fins 12 and the supply of liquid fuel may be cut off from the tube or tubes provided with such vanes. By this means the flame is shortened and the intensity of the local heat near the burner nozzle amplified, thereby increasing the efficiency of the burner without obstructing the flow of vaporized liquid fuel within the tubes of the said burner. The inner tube 11 is held in position by screws 13 carried by the intermediate tube 10 and contacting with the outer surface of the said inner tube.

A number of radially arranged fuel inlet pipes 14 mounted in and passing through the outer casing 1, serve to supply fuel to and to hold the tube 10 in position within the casing 1. In the present arrangement three such pipes are provided arranged at equal angular distances apart. A similar pipe 15, passing through the outer casing 1 and intermediate tube 10, communicates with the interior of the inner tube 11. These radially arranged fuel inlet pipes 14, 15 are adapted to be connected to a main fuel feed pipe, the fuel being supplied by gravity, or under pressure or from any desired supply system. In each of the connecting pipes 14*a*, 15*a* leading to the radially arranged inlet pipes a separate regulating valve 14*b*, 15*b* located in addition to any main valve that may be provided to control the supply of fuel. At a part of the burner, which when the burner is in use occupies the lowermost position, a drain off tap 16 is provided.

It is well known to those versed in the art that obstructions of any kind in those portions of burners through which the fuel passes, will, in the course of operation, accumulate carbon, sediment or other extraneous matter and thus lower the efficiency of the burner. The troubles become intensely aggravated when the oil and air are preheated as is most essential to secure the thorough vaporization and consequent perfect combustion necessary to ensure the most economical results. When using a burner constructed in accordance with this invention the oil and air can be preheated to any degree of temperature conveniently attainable which adds greatly to the economy of operation. For this reason the passage between the inner tube 11 and the intermediate tube 10 is free from fins, vanes or like obstructions.

As previously described the oil feed pipes 14, 15 are screwed into the casing and tubes, and these pipes may be adjusted if desired so that their outlet ends are level with or project beyond the inner surface of the tubes into which they lead the oil. In the latter case the oil or oil vapour will not be fed or flow directly onto the inner surfaces of the tubes but will be delivered into the body of air passing through the tubes. The said feed pipes may be adjusted inwardly to any desired degree.

It will be understood that the burner can be inspected in action by looking through the window 8 at the end of the cylindrical projection 6, which is in alignment with the concentric tubes, and by means of this window the whole of the interiors of the concentric tubes may be viewed without in any way interfering with the operation of the burner and without disconnecting any part thereof. A glance through this opening when the burner is in operation will show exactly how each of the oil lines is feeding and the efficiency of the vaporization can be examined. By the removal of the inspection cap access can be had to all the passages so that the burner can be thoroughly cleaned without dismantling the assembled tubes and without removing the burner from its setting or support.

The portion of the burner adjacent the connection for the compressed air to the outer tube, for example the elbow before described, is provided with a tapping 17 to which a suitable gauge may be connected for testing the pressure and the temperature of the air.

As previously mentioned the nozzle is preferably made quickly detachable so that it may be easily removed and replaced by one of a different shape. In this manner the burner in accordance with the pressure of the air supplied thereto can be adapted so that the length and shape of the flame can be changed to suit the particular conditions, met with in different kinds of work. Moreover the nozzle may comprise two or more cones arranged one within another and spaced apart, air being supplied separately or jointly to each cone.

When the air supplied to the burner is preheated to a temperature in excess of the boiling point of the oil or other liquid supplied the walls of the inner and intermediate tubes are heated to such a temperature that any portion of the oil which comes into contact with the heated walls is liable to crack, which cracking of the oil leaves a deposit of carbon on the tube and if allowed to collect will accumulate to such an extent that the tubes will become obstructed and the burner

will cease to operate efficiently. In order to avoid overheating of the walls of the tubes, the inner tube 11 is so constructed that the walls thereof are prevented from becoming excessively heated.

Around the tube 11, which comprises walls 11*a* and 11*b* having an enclosed space or chamber 18 between them, is arranged a covering or lagging 19 of non-combustible and non-conducting material such for example as asbestos.

The space or chamber 18 is continuously supplied with air by a pipe 20 and suitable partitions 21 arranged in the chamber 18, direct the air circumferentially around and also lengthwise of the said chamber, the air being exhausted from the chamber 18 by a pipe 22 from whence it may be conveyed by a pipe 23 to the space between the outer tube 1 and the intermediate tube 10, the flow of air through the pipe 23 being controlled by a valve 24. The pipe 22*a* controlled by a valve (not shown) allows escape of air when the valve 24 is closed.

In operation by way of example, oil is fed to the radially arranged pipes 14, 15 and the elbow 3 is put in connection with a supply of preheated compressed air. The control valves connected to each of the radially arranged pipes are adjusted until a suitable quantity of oil is being fed into the tubes 10, 11. In this way a small quantity of oil is distributed over a very large area. The air passes down the elbow 3 and a proportion thereof travels through and between the inner and intermediate tubes, coming into contact with the films of oil spread over the surfaces of such tubes thereby thoroughly vaporizing the oil which mixes with the air as it is carried towards the outlet ends of the tubes. Alternatively the oil may be preheated to a degree sufficient to ensure that it enters these tubes in a state of vapour.

The remaining proportion of the air travels along the passage between the intermediate tube and the outer casing, and, on arriving near to the outlet end of the burner comes into contact with the curved fins or vanes 12 extending across this passage as hereinbefore mentioned. These fins or vanes cause the air to swirl or eddy and thereby create a turbulence of the mixtures delivered from the inner tubes when the streams come into contact on leaving the nozzle 9.

It should be noted that the truncated cone shaped nozzle directs the stream of swirling air from the outer passage onto the streams of mixed air and oil from the unobstructed inner tubes whereby the streams upon meeting, are agitated in such a fashion that they become thoroughly mixed. In other words a mixture of vaporized oil and air in correct proportions for complete combustion is delivered into the combustion chamber.

The outer casing 1 and the intermediate and inner tubes 10, 11 may be made of such relative dimensions that the whole amount of the air necessary for complete combustion of the fuel supplied to the said tubes can be introduced into the combustion space through the burner thereby eliminating separate recuperators, flues or other conduits for the admission of auxiliary air for supporting combustion.

According to a modification, instead of exhausting the air from the chamber 18 through the pipe 22, apertures 25, Figure 5, may be provided in the tube 11 adjacent the nozzle 9, and thus the air after passing from the pipe 20 and traversing the length of the chamber 18 can be exhausted from the chamber into the mixture of air and oil.

Instead of using air as the cooling medium, any other suitable fluid may be used, for example water which may be conveyed by the pipe 20 to the chamber 18 from whence it is led away to a storage tank or other suitable reservoir by the pipe line 22*a*.

The invention is not limited to the precise forms or details of construction hereinabove described as these may be varied to suit particular cases.

I claim:

1. A burner, comprising a tubular casing, a frustoconical nozzle forming an extension of said casing, a set of radially spaced tubes arranged coaxially within said casing and extending adjacent the mouth of said nozzle to form separate passageways, the innermost tube of said set of tubes having double walls forming a chamber, a pipe for conveying cooling fluid to said chamber, a pipe for exhausting said cooling fluid from said chamber, a pipe for conveying preheated air under pressure to said casing and said tubes at their ends remote from the nozzle, pipes for supplying liquid fuel to some of said tubes, means for independently controlling the supply of liquid fuel through each pipe, and vanes in the passageways to which liquid fuel is not introduced for imparting gyratory motion to air passing through said passageways.

2. A burner comprising a tubular casing, a frusto-conical nozzle forming a continuation of said casing, a plurality of radially spaced tubes arranged co-axially within said casing, one of said tubes having a chamber in its wall, means for circulating a fluid through said chamber, a pipe for conveying fluid exhausted from the chamber to a passageway between the casing and the outermost of said tubes, means for controlling the flow of fluid in said pipe, a pipe supplying air to the said casing and tubes, pipes for supplying liquid fuel to the passageways formed between said tubes, and means for independently controlling the flow of liquid through each liquid supplying pipe.

3. A burner comprising a tubular casing, a frusto-conical nozzle forming a continuation of said casing, a plurality of radially spaced tubes arranged co-axially within the casing, one of said tubes having a chamber in its wall, means for circulating a fluid through the said chamber, a pipe for conveying fluid exhausted from the chamber to a passageway between the casing and the outermost of said tubes, means for controlling the flow of fluid in said pipe, a covering of heat insulating material outside the said chamber, a pipe supplying air to the said casing and tubes, pipes for supplying liquid fuel to the passageways formed between said tubes, and means for independently controlling the flow of liquid through each liquid supplying pipe.

ALEXANDER MAGOWAN.