Innovation, Sciences et Développement économique Canada
Office de la Propriété Intellectuelle du Canada

Innovation, Science and Economic Development Canada
Canadian Intellectual Property Office

CA 3154213 A1 2021/04/15

(21) 3 154 213

(12) DEMANDE DE BREVET CANADIEN
CANADIAN PATENT APPLICATION

(13) A1

(86) Date de dépôt PCT/PCT Filing Date: 2020/10/08
(87) Date publication PCT/PCT Publication Date: 2021/04/15
(85) Entrée phase nationale/National Entry: 2022/04/08
(86) N° demande PCT/PCT Application No.: EP 2020/078267
(87) N° publication PCT/PCT Publication No.: 2021/069579
(30) Priorité/Priority: 2019/10/09 (ES P201930882)

(51) Cl.Int./Int.Cl. *A61L 9/12* (2006.01)

(71) Demandeur/Applicant:
ZOBELE HOLDING S.P.A., IT

(72) Inventeurs/Inventors:
TRIAS LAFUENTE, MARINA, ES;
GARCIA FABREGA, RUBEN, ES;
GRAUS FERRER, ALBA, ES

(74) Agent: BLAKE, CASSELS & GRAYDON LLP

(54) Titre : DISPOSITIF DE DIFFUSION DE SUBSTANCES VOLATILES
(54) Title: DEVICE FOR DIFFUSING VOLATILE SUBSTANCES

FIG. 1

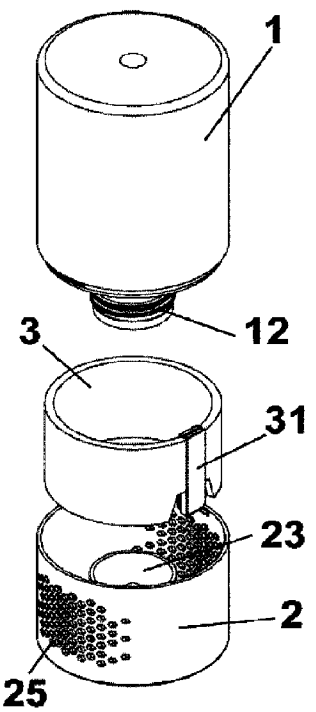

(57) Abrégé/Abstract:
The device for diffusing volatile substances comprises a container (1) containing a liquid with said volatile substances, a base element (2) that closes said container (1), and a wick (3) that is impregnated with said volatile substances, wherein the base element (2) comprises an internal channel (21) in which the liquid containing the volatile substances is deposited, a part of the wick (3) being placed in said internal channel (21), being impregnated with the liquid containing the volatile substances located in the channel internal (21). It allows providing a volatile substances device used in an inverted position that does not require any intermediate wick or any dosing system.

Date Submitted: 2022/04/08

CA App. No.: 3154213

Abstract:

The device for diffusing volatile substances comprises a container (1) containing a liquid with said volatile substances, a base element (2) that closes said container (1), and a wick (3) that is impregnated with said volatile substances, wherein the base element (2) comprises an internal channel (21) in which the liquid containing the volatile substances is deposited, a part of the wick (3) being placed in said internal channel (21), being impregnated with the liquid containing the volatile substances located in the channel internal (21). It allows providing a volatile substances device used in an inverted position that does not require any intermediate wick or any dosing system.

DEVICE FOR DIFFUSING VOLATILE SUBSTANCES

DESCRIPTION

The present invention relates to a device for the diffusion of volatile substances.

Background of the invention

There are devices on the market for diffusing volatile substances, such as static air fresheners with inverted positioning. As they are products with inverted positioning, the difficulty of the solutions consists in the correct dosage of the volatile substances.

In existing products, this solution usually consists of an intermediate wick fixed to the container by means of a plug.

By placing the bottle on the base, this intermediate wick comes into contact with a secondary wick. The intermediate wick functions as a dispenser, and the secondary wick functions as the evaporation surface.

A drawback of these devices is that the intermediate wick forms part of the fragrance container, so that good contact between the intermediate wick and the secondary wick cannot be ensured.

In addition, another drawback is that dripping may occur at the time of activation, and, in addition, the product is usually single-use.

Therefore, an object of the present invention is to provide a device for volatile substances that is used in inverted position that does not require any intermediate wick or any dosing system.

Description of the invention

With the device for diffusing volatile substances according to the invention, the aforementioned drawbacks are solved, presenting other advantages that will be

described below.

The device for diffusing volatile substances according to the present invention comprises:

- a container containing a liquid with such volatile substances,
- a base element that closes said container, and
- a wick that is impregnated with said volatile substances,

wherein the base element comprises an internal channel in which the liquid containing the volatile substances is deposited, a part of the wick being placed in said internal channel, being impregnated with the liquid containing the volatile substances located in the internal channel.

Advantageously, said base element comprises a window that communicates the internal channel with the rest of the base element

Furthermore, said base element comprises a projection that activates an outlet valve for the liquid from the container that allows the liquid to exit the container towards said base element.

The base element also advantageously comprises a guide for guiding a mouth of said container, and the base element also comprises a plurality of evaporation holes, and to facilitate evaporation therethrough.

Advantageously, said evaporation holes are arranged on the side wall of said base element.

Furthermore, preferably said wick comprises a projection that is positioned in said internal channel of the base element, and said projection is located longitudinally in the wick.

According to a preferred embodiment, the wick has a cylindrical shape.

The device for diffusing volatile substances according to the present invention has at least the following advantages:

- It does not require any intermediate wick or dosing system, therefore the device is cheaper than conventional devices;
- It eliminates or minimizes leaks,
- Correct contact between the base element and the wick and the correct evaporation of volatile substances is ensured,
- It allows the replacement of the wick in a clean way.

Brief description of the drawings

For a better understanding what has been stated, some drawings are attached in which, schematically and only as a non-limiting example, a practical case of embodiment is represented.

Figure 1 is an exploded perspective view of the device for diffusing volatile substances according to the present invention; and

Figure 2 is an exploded longitudinal sectional view of the device for diffusing volatile substances according to the present invention.

Description of a preferred embodiment

As shown in the figures, the device for diffusing volatile substances comprises a container 1 containing a liquid with the volatile substances.

Said container 1 comprises a valve 11, which is actuated before the use of the diffusion device, as will be explained later, and a mouth 12 provided with an external thread.

The device for diffusing volatile substances also comprises a base element 2. This base element 2 is used to place the device in an inverted position, that is, with the base element 2 in the lower position, as shown in the figures.

Said base element 2 comprises an internal channel 21 that contains the liquid from container 1. For this, the base element 2 comprises a projection 22 that activates the

valve 11 of container 1, opening the outlet of the liquid from said container through the valve 11

The base element 2 also comprises a guide 23, for guiding the mouth 12 of the container 1, provided with an internal thread.

Furthermore, the base element 2 also comprises a window 24, which communicates the internal channel 21 with the rest of the base element, as shown in figure 2.

To facilitate evaporation, the base element 2, which is preferably cylindrical in shape, comprises a plurality of evaporation holes 25, which are arranged on the side wall of the base element 2, according to the embodiment shown.

The device for diffusing volatile substances also comprises a wick 3, which is preferably cylindrical in shape, and said wick 3 comprises a projection 31, preferably located longitudinally, which in its position of use is placed with one of its ends located in the internal channel 21 of the base element 2

In this way, according to the embodiment shown, the liquid with the volatile substances is impregnated in the wick 3 through this projection 31, although it could be impregnated in any suitable way without the need for said projection 31.

When it is desired to use the device for diffusing volatile substances according to the present invention, first the wick 3 is placed in its position inside the base element 2, with its projection 31 positioned inside the internal channel 21.

Said wick 3 shall be replaced as many times as necessary, as it is a spare element.

Next, the base element 2 will be coupled to a container 1. In doing so, the projection 22 of the base element 2 shall be inserted into the valve 11, opening it.

By placing the diffusion device in its position of use, that is, in the position represented in the figures with the base element 2 in its lower part, the liquid shall pass through the valve 11 and it shall be placed in the internal channel 24, with the wick 3 being

impregnated with said liquid and the volatile substances shall diffuse or evaporate to the environment.

Said diffusion or evaporation is performed through the evaporation holes 25, in the embodiment shown, although it could also be carried out through a gap between the base element 2 and the container 1.

Despite the fact that reference has been made to a specific embodiment of the invention, it is obvious to a person skilled in the art that the device described for diffusing volatile substances is susceptible to numerous variations and modifications, and that all the mentioned details can be substituted by others technically equivalent, without departing from the scope of protection defined by the appended claims.

CLAIMS

1. Device for diffusing volatile substances, comprising:
- a container (1) containing a liquid with said volatile substances,
- a base element (2) that closes said container (1), and
- a wick (3) that is impregnated with said volatile substances,
characterized in that the base element (2) comprises an internal channel (21) in which the liquid containing the volatile substances is deposited, a part of the wick (3) being placed in said internal channel (21), being impregnated with the liquid containing the volatile substances located in the internal channel (21).

2. Device for diffusing volatile substances according to claim 1, wherein said base element (2) comprises a window (24) that communicates the internal channel (21) with the rest of the base element (2).

3. Device for diffusing volatile substances according to claim 1 or 2, wherein said base element (2) comprises a projection (22) that activates an outlet valve (11) for the liquid from the container (1).

4. Device for diffusing volatile substances according to any one of the preceding claims, wherein the base element (2) also comprises a guide (23) for guiding a mouth (12) of said container (1).

5. Device for diffusing volatile substances according to any one of the preceding claims, wherein said base element (2) comprises a plurality of evaporation holes (25).

6. Device for diffusing volatile substances according to claim 5, wherein said evaporation holes (25) are arranged on the side wall of said base element (2).

7. Device for diffusing volatile substances according to claim 1, wherein said wick (3) comprises a projection (31) that is placed in said internal channel (21) of the base element (2).

8. Device for diffusing volatile substances according to claim 7, wherein said

projection (31) of the wick (3) is longitudinally located in the wick (3).

9. Device for diffusing volatile substances according to any one of claims 1 or 7, wherein the wick (3) has a cylindrical shape.

FIG. 1

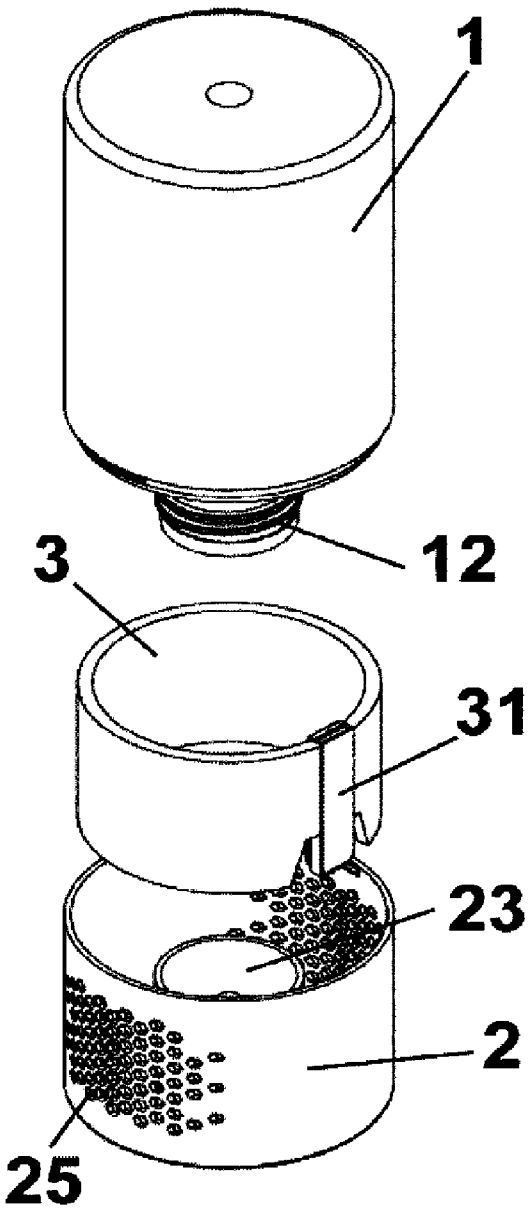

FIG. 2

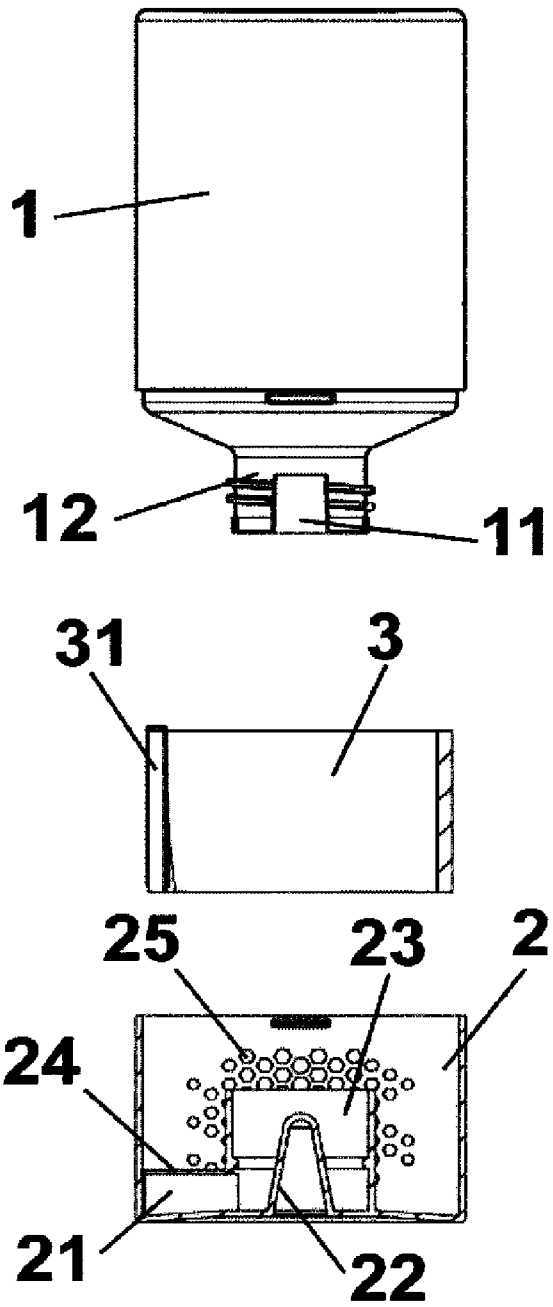

FIG. 1

